Symmetra™ PX

48 kW 400 V

Installation

07/2017



www.schneider-electric.com

Legal Information

The Schneider Electric brand and any registered trademarks of Schneider Electric Industries SAS referred to in this guide are the sole property of Schneider Electric SA and its subsidiaries. They may not be used for any purpose without the owner's permission, given in writing. This guide and its content are protected, within the meaning of the French intellectual property code (Code de la propriété intellectuelle français, referred to hereafter as "the Code"), under the laws of copyright covering texts, drawings and models, as well as by trademark law. You agree not to reproduce, other than for your own personal, noncommercial use as defined in the Code, all or part of this guide on any medium whatsoever without Schneider Electric's permission, given in writing. You also agree not to establish any hypertext links to this guide or its content. Schneider Electric does not grant any right or license for the personal and noncommercial use of the guide or its content, except for a non-exclusive license to consult it on an "as is" basis, at your own risk. All other rights are reserved.

Electrical equipment should be installed, operated, serviced, and maintained only by qualified personnel. No responsibility is assumed by Schneider Electric for any consequences arising out of the use of this material.

As standards, specifications, and designs change from time to time, please ask for confirmation of the information given in this publication.

Table of Contents

Important Safety Instructions — SAVE THESE INSTRUCTIONS 5
- Symbols in This Manual 5
- Electromagnetic Compatibility 6
- Safety Precautions 6
  - Electrical Safety 8
  - Battery Safety 9

Specifications 11
- Required Upstream Protection 12
- Required Wiring for Installation 12
- Environment 12
- Specifications for the Modular Battery Cabinet 12

System Overview 14

Clearance Symmetra PX 48 kW 15

Prepare for Bottom Cable Entry 16

Level the Cabinets 17

Prepare for Cables 18
- Prepare for Cables in a Top Cable Entry System 19
- Prepare for Cables in a Bottom Cable Entry System with Raised Floor 20

Connect Input and Ground Cables 21
- Connect Cables in a Single Mains System 21
- Connect Cables in a Dual Mains System 22

EPO Switch 23
- Connect the EPO Switch 23

Communication Cables 25
- Connect the Network Communication Cable 25

Install the Power Distribution Modules 26

Install the Modular Battery Solution (Option) 30
- Connect Battery Cables to the UPS 30
- Connect the Battery Cables between the Modular Battery Cabinets 31
- Connect Modular Battery Cabinet Communication Cables 34

Checklist 38

Important Safety Instructions — SAVE THESE INSTRUCTIONS

This manual contains important safety instructions for Symmetra PX 48 kW UPS and SYCFXR48 that should be followed during installation and maintenance of the UPS and batteries.

Read these instructions carefully and look at the equipment to become familiar with it before trying to install, operate, service or maintain it. The following safety messages may appear throughout this manual or on the equipment to warn of potential hazards or to call attention to information that clarifies or simplifies a procedure.

Symbols in This Manual

 The addition of this symbol to a “Danger” or “Warning” safety message indicates that an electrical hazard exists which will result in personal injury if the instructions are not followed.

 This is the safety alert symbol. It is used to alert you to potential personal injury hazards. Obey all safety messages with this symbol to avoid possible injury or death.

⚠DANGER

DANGER indicates a hazardous situation which, if not avoided, **will result in** death or serious injury.

Failure to follow these instructions will result in death or serious injury.

⚠WARNING

WARNING indicates a hazardous situation which, if not avoided, **could result in** death or serious injury.

Failure to follow these instructions can result in death, serious injury, or equipment damage.

⚠CAUTION

CAUTION indicates a hazardous situation which, if not avoided, **could result in** minor or moderate injury.

Failure to follow these instructions can result in injury or equipment damage.

NOTICE

NOTICE is used to address practices not related to physical injury. The safety alert symbol shall not be used with this type of safety message.

Failure to follow these instructions can result in equipment damage.

Please Note

Electrical equipment should only be installed, operated, serviced, and maintained by qualified personnel. No responsibility is assumed by Schneider Electric for any consequences arising out of the use of this material.

A qualified person is one who has skills and knowledge related to the construction, installation, and operation of electrical equipment and has received safety training to recognize and avoid the hazards involved.

Electromagnetic Compatibility

NOTICE

RISK OF ELECTROMAGNETIC DISTURBANCE

This is a product category C2 UPS product. In a residential environment, this product may cause radio inference, in which case the user may be required to take additional measures.

Failure to follow these instructions can result in equipment damage.

Safety Precautions

⚠ DANGER

HAZARD OF ELECTRIC SHOCK, EXPLOSION, OR ARC FLASH

All safety instructions in this document must be read, understood and followed.

Failure to follow these instructions will result in death or serious injury.

⚠ DANGER

HAZARD OF ELECTRIC SHOCK, EXPLOSION, OR ARC FLASH

Read all instructions in the Installation Manual before installing or working on this UPS system.

Failure to follow these instructions will result in death or serious injury.

⚠ DANGER

HAZARD OF ELECTRIC SHOCK, EXPLOSION, OR ARC FLASH

Do not install the UPS system until all construction work has been completed and the installation room has been cleaned.

Failure to follow these instructions will result in death or serious injury.

⚠ DANGER

HAZARD OF ELECTRIC SHOCK, EXPLOSION, OR ARC FLASH

- The product must be installed according to the specifications and requirements as defined by Schneider Electric. It concerns in particular the external and internal protections (upstream breakers, battery breakers, cabling, etc.) and environmental requirements. No responsibility is assumed by Schneider Electric if these requirements are not respected.
- After the UPS system has been electrically wired, do not start up the system. Start-up must only be performed by Schneider Electric.

Failure to follow these instructions will result in death or serious injury.

⚠DANGER

HAZARD OF ELECTRIC SHOCK, EXPLOSION, OR ARC FLASH

The UPS system must be installed according to local and national regulations. Install the UPS according to:

- IEC 60364 (including 60364–4–41- protection against electric shock, 60364–4–42 - protection against thermal effect, and 60364–4–43 - protection against overcurrent), **or**
- NEC NFPA 70, **or**
- Canadian Electrical Code (C22.1, Part 1)

depending on which one of the standards apply in your local area.

Failure to follow these instructions will result in death or serious injury.

⚠DANGER

HAZARD OF ELECTRIC SHOCK, EXPLOSION, OR ARC FLASH

- Install the UPS system in a temperature controlled indoor environment free of conductive contaminants and humidity.
- Install the UPS system on a non-flammable, level and solid surface (e.g. concrete) that can support the weight of the system.

Failure to follow these instructions will result in death or serious injury.

⚠DANGER

HAZARD OF ELECTRIC SHOCK, EXPLOSION, OR ARC FLASH

The UPS is not designed for and must therefore not be installed in the following unusual operating environments:

- Damaging fumes
- Explosive mixtures of dust or gases, corrosive gases, or conductive or radiant heat from other sources
- Moisture, abrasive dust, steam or in an excessively damp environment
- Fungus, insects, vermin
- Salt-laden air or contaminated cooling refrigerant
- Pollution degree higher than 2 according to IEC 60664-1
- Exposure to abnormal vibrations, shocks, and tilting
- Exposure to direct sunlight, heat sources, or strong electromagnetic fields

Failure to follow these instructions will result in death or serious injury.

⚠DANGER

HAZARD OF ELECTRIC SHOCK, EXPLOSION, OR ARC FLASH

Do not drill or cut holes for cables or conduits with the gland plates installed and do not drill or cut holes in close proximity to the UPS.

Failure to follow these instructions will result in death or serious injury.

⚠WARNING

HAZARD OF ARC FLASH

Do not make mechanical changes to the product (including removal of cabinet parts or drilling/cutting of holes) that are not described in the Installation Manual.

Failure to follow these instructions can result in death, serious injury, or equipment damage.

NOTICE

RISK OF OVERHEATING

Respect the space requirements around the UPS system and do not cover the product's ventilation openings when the UPS system is in operation.

Failure to follow these instructions can result in equipment damage.

NOTICE

RISK OF EQUIPMENT DAMAGE

Do not connect the UPS output to regenerative load systems including photovoltaic systems and speed drives.

Failure to follow these instructions can result in equipment damage.

Electrical Safety

⚠ DANGER

HAZARD OF ELECTRIC SHOCK, EXPLOSION, OR ARC FLASH

- Electrical equipment must be installed, operated, serviced, and maintained only by qualified personnel.
- Apply appropriate personal protective equipment (PPE) and follow safe electrical work practices.
- Turn off all power supplying the UPS system before working on or inside the equipment.
- Before working on the UPS system, check for hazardous voltage between all terminals including the protective earth.
- The UPS contains an internal energy source. Hazardous voltage can be present even when disconnected from the mains supply. Before installing or servicing the UPS system, ensure that the units are OFF and that mains and batteries are disconnected. Wait five minutes before opening the UPS to allow the capacitors to discharge.
- The UPS must be properly earthed/grounded and due to a high leakage current, the earthing/grounding conductor must be connected first.

Failure to follow these instructions will result in death or serious injury.

⚠ DANGER

HAZARD OF ELECTRIC SHOCK, EXPLOSION, OR ARC FLASH

In systems where backfeed protection is not part of the standard design, an automatic isolation device (backfeed protection option or other device meeting the requirements of IEC/EN 62040–1 **or** UL1778 5th Edition – depending on which of the two standards apply to your local area) must be installed to prevent hazardous voltage or energy at the input terminals of the isolation device. The device must open within 15 seconds after the upstream power supply fails and must be rated according to the specifications.

Failure to follow these instructions will result in death or serious injury.

When the UPS input is connected through external isolators that, when opened, isolate the neutral or when the automatic backfeed isolation is provided external to the equipment or is connected to an IT power distribution system, a label must be fitted at the UPS input terminals, and on all primary power isolators installed remote from the UPS area and on external access points between such isolators and the UPS, by the user, displaying the following text (or equivalent in a language which is acceptable in the country in which the UPS system is installed):

⚠DANGER

HAZARD OF ELECTRIC SHOCK, EXPLOSION, OR ARC FLASH

Risk of Voltage Backfeed. Before working on this circuit: Isolate the UPS and check for hazardous voltage between all terminals including the protective earth.

Failure to follow these instructions will result in death or serious injury.

Battery Safety

⚠DANGER

HAZARD OF ELECTRIC SHOCK, EXPLOSION, OR ARC FLASH

- Battery circuit breakers must be installed according to the specifications and requirements as defined by Schneider Electric.
- Servicing of batteries must only be performed or supervised by qualified personnel knowledgeable of batteries and the required precautions. Keep unqualified personnel away from batteries.
- Disconnect charging source prior to connecting or disconnecting battery terminals.
- Do not dispose of batteries in a fire as they can explode.
- Do not open, alter, or mutilate batteries. Released electrolyte is harmful to the skin and eyes. It may be toxic.

Failure to follow these instructions will result in death or serious injury.

⚠DANGER

HAZARD OF ELECTRIC SHOCK, EXPLOSION, OR ARC FLASH

Batteries can present a risk of electric shock and high short-circuit current. The following precautions must be observed when working on batteries

- Remove watches, rings, or other metal objects.
- Use tools with insulated handles.
- Wear protective glasses, gloves and boots.
- Do not lay tools or metal parts on top of batteries.
- Disconnect the charging source prior to connecting or disconnecting battery terminals.
- Determine if the battery is inadvertently grounded. If inadvertently grounded, remove source from ground. Contact with any part of a grounded battery can result in electric shock. The likelihood of such shock can be reduced if such grounds are removed during installation and maintenance (applicable to equipment and remote battery supplies not having a grounded supply circuit).

Failure to follow these instructions will result in death or serious injury.

⚠DANGER

HAZARD OF ELECTRIC SHOCK, EXPLOSION, OR ARC FLASH

When replacing batteries, always replace with the same type and number of batteries or battery packs.

Failure to follow these instructions will result in death or serious injury.

NOTICE

RISK OF EQUIPMENT DAMAGE

- Wait until the system is ready to be powered up before installing batteries in the system. The time duration from battery installation until the UPS system is powered up must not exceed 72 hours or 3 days.
- Batteries must not be stored more than six months due to the requirement of recharging. If the UPS system remains de-energized for a long period, Schneider Electric recommends that you energize the UPS system for a period of 24 hours at least once every month. This charges the batteries, thus avoiding irreversible damage.

Failure to follow these instructions can result in equipment damage.

Specifications

Input Specifications

	380 V	400 V	415 V
Input frequency (Hz)	40-70 Hz with 10 Hz/sec slewrate		
Nominal input current (A)[1]	77	73	70
Maximum input current (A)[2]	84.4	80.2	77.3
Input current limit (A)[3]	98.3	98.3	98.3
Maximum short circuit level Icc (kA)	Rated conditional short–circuit current Icc: 30 kA. Rated peak withstand current Ipk: Icc x 1.7. Device: Refer to *Required Upstream Protection, page 12*.		

Bypass Specifications

	380 V	400 V	415 V
Input frequency (Hz)	40–70		
Nominal input current (A)[1]	73	69	67
Max. bypass input current (A) (125% continuous)	91	87	83
Maximum short circuit level Icc (kA)	Rated conditional short–circuit current Icc: 30 kA. Rated peak withstand current Ipk: Icc x 1.7. Device: Refer to *Required Upstream Protection, page 12*.		

Output Specifications

	380 V	400 V	415 V
Nominal output current (A)	73	69	67
Output frequency (on line, in bypass) (Hz/s)[4]	Synchronized to input over the range 57 Hz – 63 Hz		
Output frequency (battery operation) (Hz/s)	50/60		
Slew rate (Hz/s)	Programmable to 0.25, 0.5, 1, 2, 4, and 6		

Modular Battery Specifications

Nominal voltage (V)	± 192
Nominal battery current (A)[5]	132
Maximum battery current (A)[6]	165
End voltage	1.6-1.75 V/cell (automatic, depending on load)

1. Input current based on rated load and batteries fully charged.
2. Input current based on full battery recharge, nominal voltage, and rated load.
3. Current limitation through electronic current limiting is based on full battery recharge and -15% input voltage.
4. The following ranges can be selected: 40-60 Hz, 47-53 Hz, 49.9-50.1 Hz, 50-70 Hz, 57-63 Hz, and 59.9–60.1 Hz
5. Nominal battery discharge current based on rated load and nominal battery voltage.
6. Maximum battery discharge current based on rated load at the end of the discharge.

Torque Specifications

Power terminals in UPS	17.5 Nm
Power terminals in modular battery cabinet	31.5 Nm

Required Upstream Protection

The specified upstream breakers below are required to obtain the conditional short-circuit current rating, Icc at 30 kA symmetrical rms.

Breaker		**Fuse**	
Input	**Bypass**	**Input**	**Bypass**
Compact NSX100F TM100D or NG160F, rating 100 A	Compact NSX100F TM100D or NG160F, rating 100 A	100 A gG/gL	100 A gG/gL

Required Wiring for Installation

If the load type is a switch mode power supply without input power corrections, then you must rate the input and output neutral wires to 173% of the phase load cable rating.

Environment

	Operation	**Storage**
Temperature	0 °C to 40 °C (32 °F to 104 °F)	-15 °C to 40 °C (5 °F to 104 °F) for systems with batteries -25 °C to 55 °C (-13 °F to 131 °F) for systems without batteries

Specifications for the Modular Battery Cabinet

Battery Output

Nominal battery voltage (V)	± 192
Battery current at full load and nominal battery voltage (A)	132
Battery current at full load and minimum battery voltage (A)	165
End of discharge voltage[7]	1.6–1.75 V/cell

Recommended Breaker and Cable Sizes

NOTE: All wiring must comply with all applicable local and/or national electrical codes.

The recommended cable sizes are based on an environment with an ambient temperature of 30 °C (86 °F).

Temperature of the conductors: 90 °C (104 °F).

7. Depending on load

Refer to IEC 60364-5-52 for installation methods. The cable sizes are recommendations for maximum configurations and copper cables.

Installation Method	B1	B2	C
Battery breaker	250	250	250
Battery cable (mm²)	35	50	35

Recommended Bolt and Lug Sizes

Use a Panduit lug type or equivalent and crimp to the manufacturer's specifications.

Cable Size	Terminal Bolt	Cable Lug Type
35 mm²	M10	LCA2-10H-Q
50 mm²	M10	LCA1/0-10H-X
25 mm²	M10	LCA1-38-E

System Overview

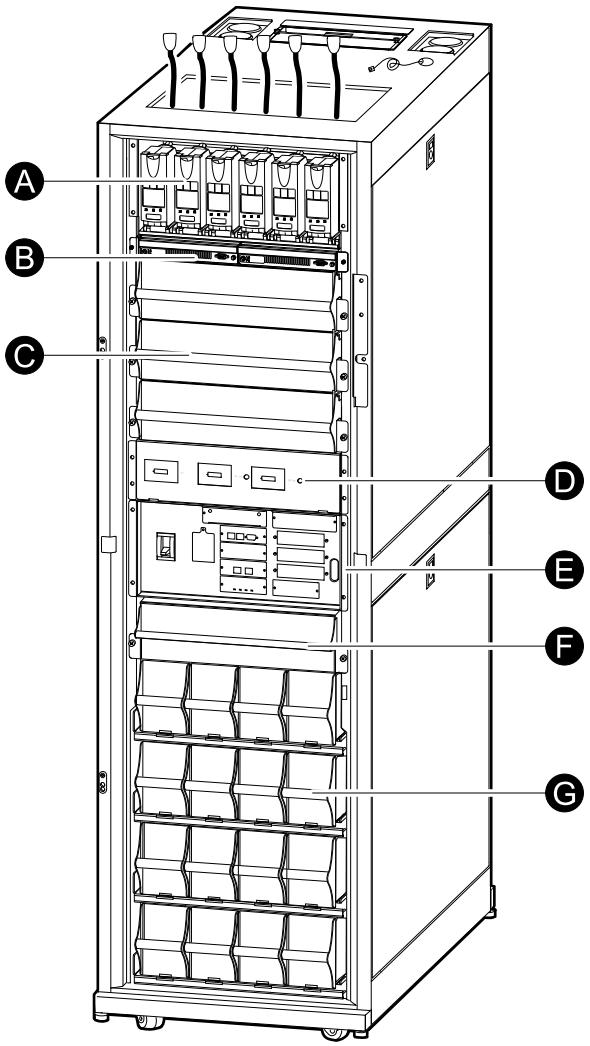

A. Power distribution modules
B. Intelligence modules
C. Power modules
D. Maintenance bypass
E. Communication interfaces
F. Static switch module
G. Modular batteries

Clearance Symmetra PX 48 kW

NOTE: Clearance dimensions are published for airflow and service access only. Consult with the local safety codes and standards for additional requirements in your local area.

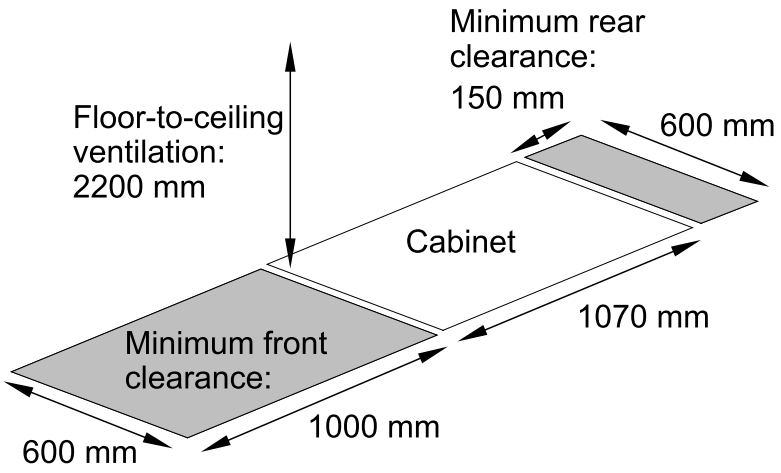

Prepare for Bottom Cable Entry

Rear View of the UPS

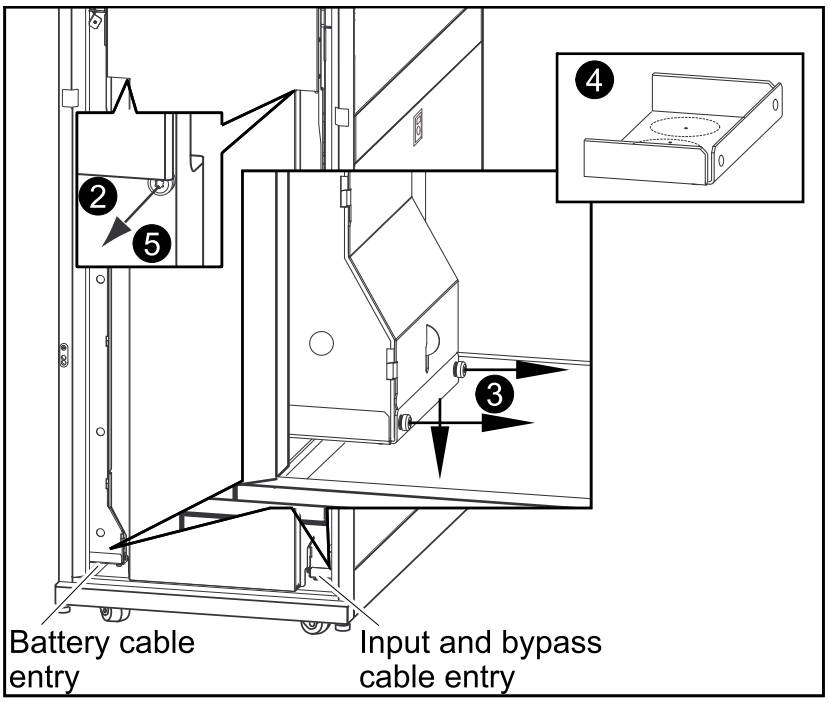

1. Open the back door.
2. Remove the back cover by loosening the two screws. Lift the cover up and out.
3. Remove the two screws and take out the plate.
4. Make holes for cables or conduits and reinstall the plate.
5. Reinstall the back cover and secure the two screws.
6. Close the back door.

Level the Cabinets

⚠WARNING

TIP HAZARD

The system must be installed on a level floor. The leveling feet will stabilize the cabinet, but will not compensate for a badly sloped floor.

Failure to follow these instructions can result in death, serious injury, or equipment damage.

1. Use a screwdriver to lower the four leveling feet

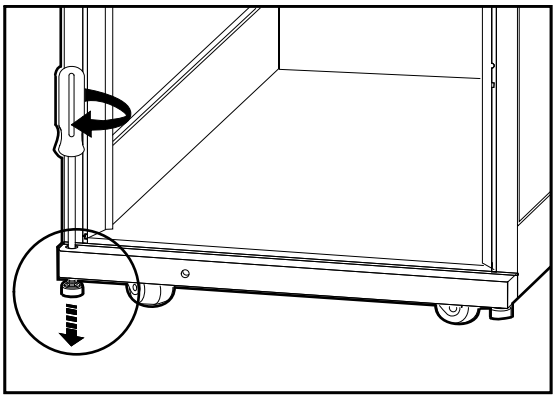

2. Use a wrench to adjust the four leveling feet and ensure that the cabinet is level.

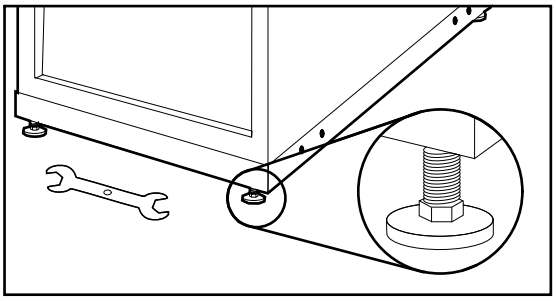

⚠WARNING

TIP HAZARD

Do not move the cabinet after the leveling feet have been lowered.

Failure to follow these instructions can result in death, serious injury, or equipment damage.

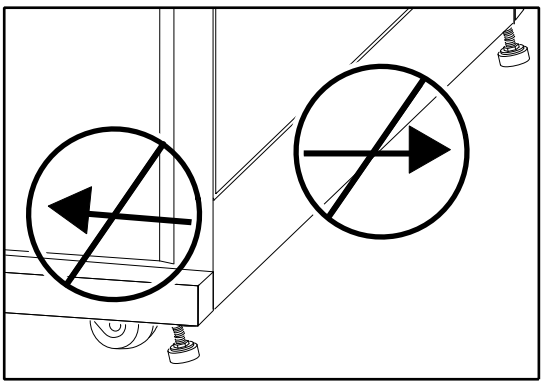

Prepare for Cables

The M8 nuts and cable ties are supplied in the UPS accessory kit.

1. Remove the screws and the three blind plates on the front, above the cable landing area.

Front View of the UPS

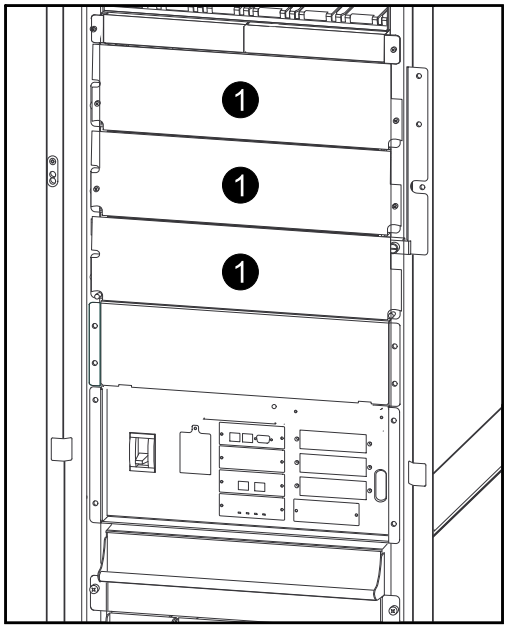

2. Remove the two screws from the two plates covering the cable landing area behind the maintenance bypass.

Top View of the Cable Landing Area

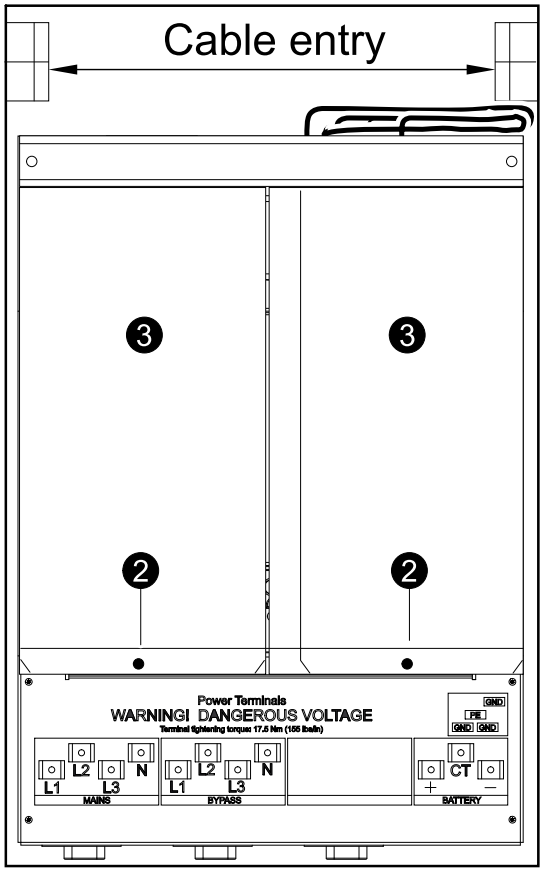

3. Remove the two cover plates by sliding them towards the middle of the cabinet and lifting.

⚠ DANGER

HAZARD OF ELECTRIC SHOCK, EXPLOSION, OR ARC FLASH

When all cabling has been completed, reinstall the two cover plates covering the cable landing area. Ensure that no part of the cable landing area touches the cover plates.

Failure to follow these instructions will result in death or serious injury.

Prepare for Cables in a Top Cable Entry System

⚠ DANGER

HAZARD OF ELECTRIC SHOCK, EXPLOSION, OR ARC FLASH

Do not drill or cut holes for cables or conduits with the covers installed and do not drill or cut holes in close proximity to the UPS.

Failure to follow these instructions will result in death or serious injury.

Front View of the UPS

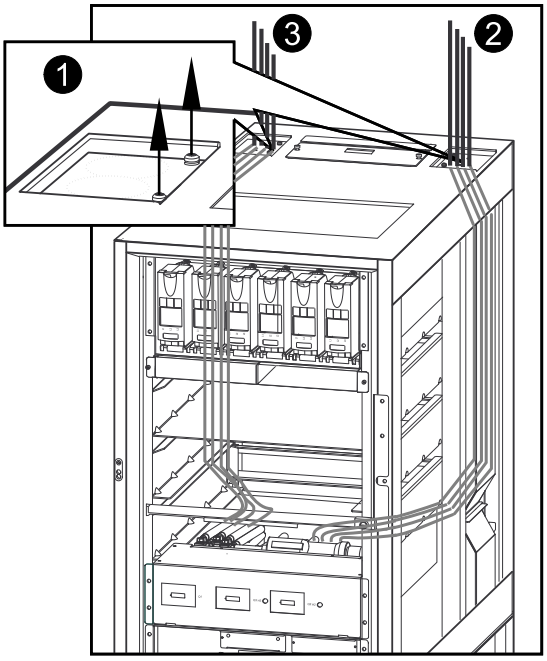

1. Remove the two screws and lift the plate. Make holes for cables or conduits and reinstall the plate.
2. Route the battery cables (if applicable) from the top through the cable conduit in the right side (seen from the front) to the cable landing area.
3. Route the input and bypass cables (if applicable) from the top through the cable conduit in the left side (seen from the front) to the cable landing area.

Prepare for Cables in a Bottom Cable Entry System with Raised Floor

1. Route the battery cables (if applicable) from the bottom through the cable conduit in the left side (seen from the rear) to the cable landing area.

Rear View of the UPS

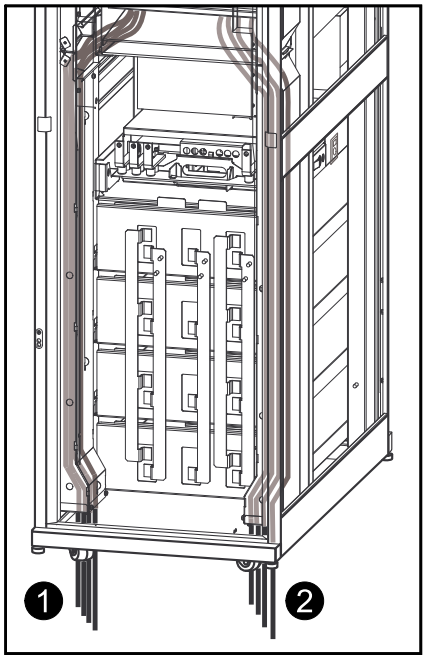

2. Route the input and bypass cables (if applicable) from the bottom through the cable conduit in the right side (seen from the rear) to the cable landing area.

Connect Input and Ground Cables

⚠CAUTION
RISK OF EQUIPMENT DAMAGE Torque the power terminals in the UPS cabinet to 17.5 Nm. **Failure to follow these instructions can result in injury or equipment damage.**

Connect Cables in a Single Mains System

1. Connect the input cables to the input cable landings.

Top View of the Cable Landing Area

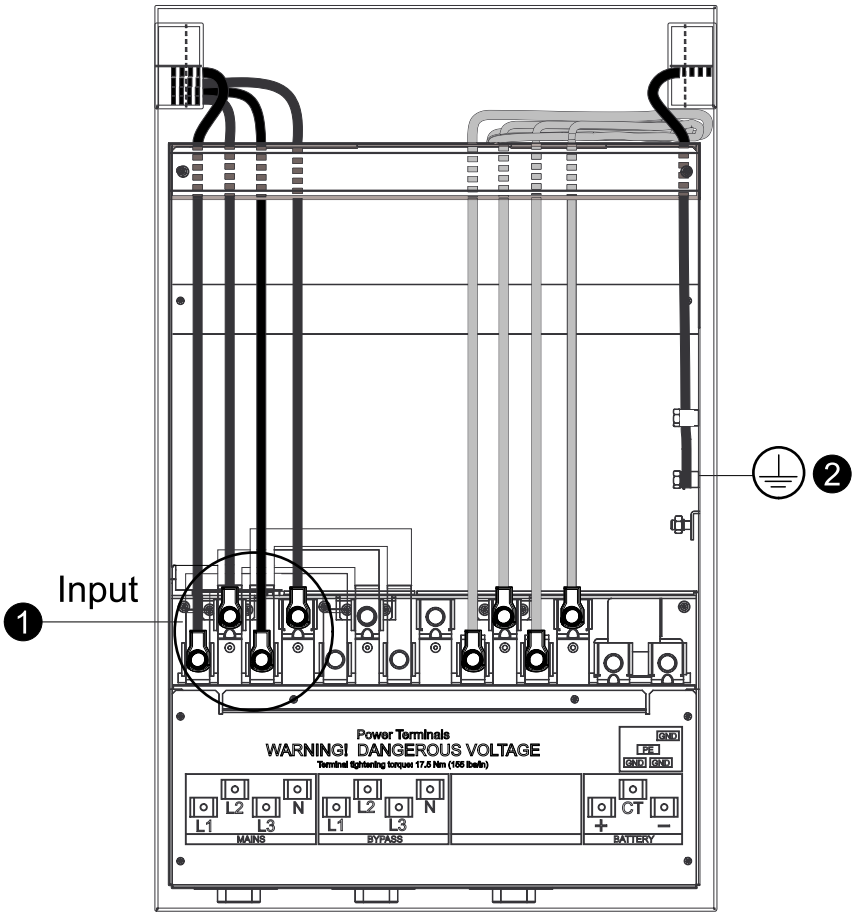

2. Connect the Protective Earth (PE) cable.

Connect Cables in a Dual Mains System

Top View of the Cable Landing Area

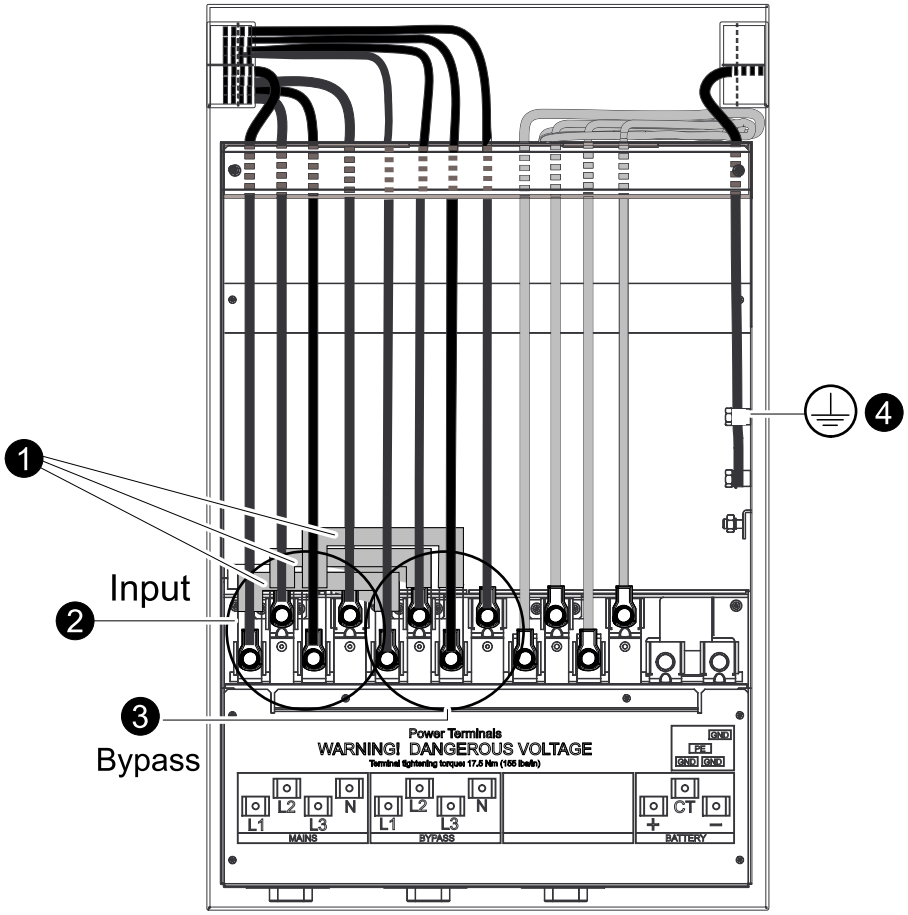

1. Remove the three single mains connections.
2. Connect the input cables to the input cable landings.
3. Connect the bypass cables to the bypass cable landings.
4. Connect the Protective Earth (PE) cable.

EPO Switch

The UPS must be connected to either a dry contact or an external 24 VDC Emergency Power Off (EPO) switch.

The EPO can be achieved with either a contact closure or application of an external 24 VDC from a SELV (Safety Extra Low voltage) source. It is important to note that the hazardous voltage from the mains voltage must be isolated from the contact closure or 24 VDC. The EPO circuit contact closure or 24 VDC is considered a SELV circuit as defined in EN60950 “Safety of Information Technology Equipment”.

NOTE: EPO switch wiring must comply with local and national electrical wiring rules.

Connect the EPO Switch

NOTE: The EPO cable is not provided.

Front View of the UPS

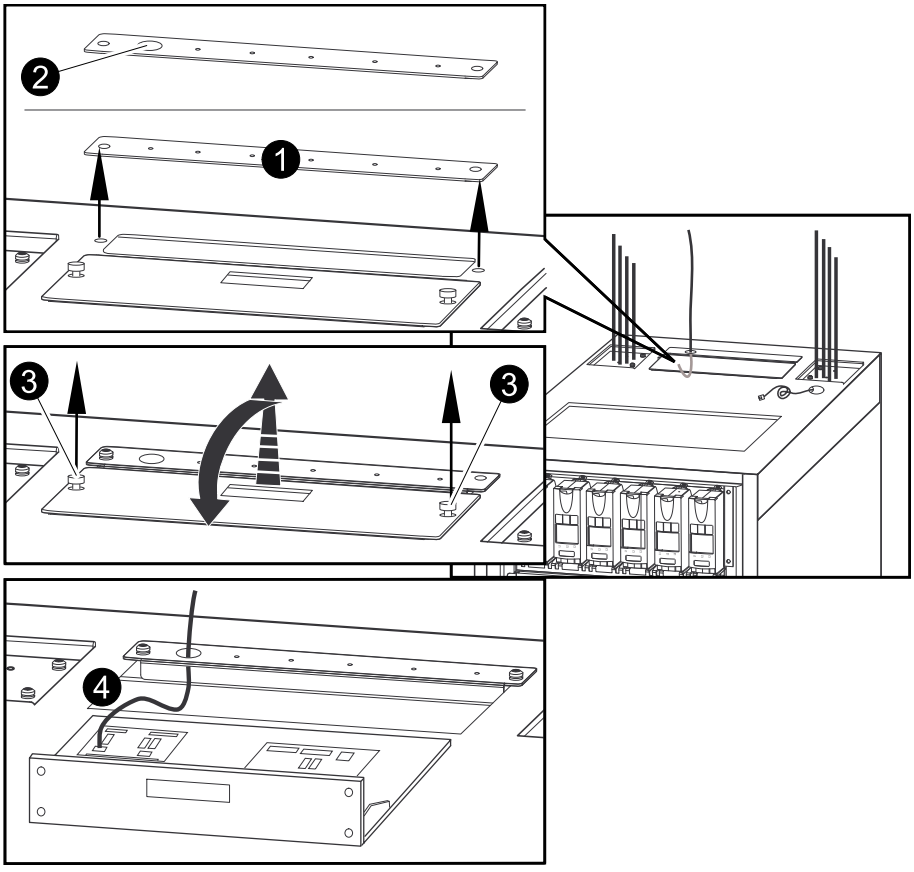

1. Remove the two bolts from the narrow top plate and lift up the plate.
2. Make a hole for the EPO cable and reinstall the plate.
3. Loosen the two finger screws from the wider plate in the top cover and then lift up the plate and place it on top of the cabinet.
4. Route the EPO cable through the hole from step 2 and connect it to the EPO/ Ancillary Interface board below the wider top plate. Use one of the wiring options shown on the wiring diagram.

5. Reinstall the plate.

Wiring Diagram

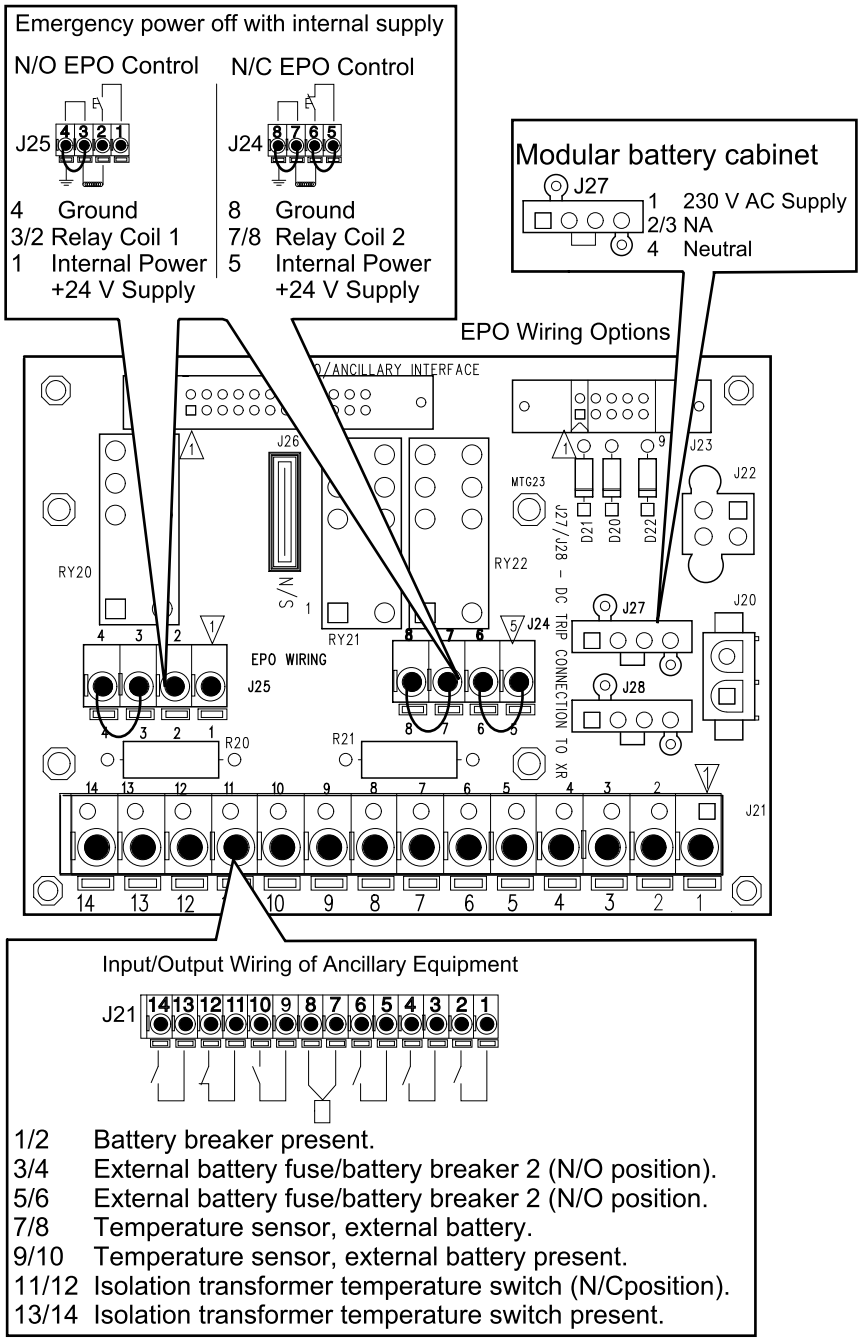

Communication Cables

Connect the Network Communication Cable

The network communication cable is located on top of the UPS. Connect the cable to your local area network.

Front View of the UPS

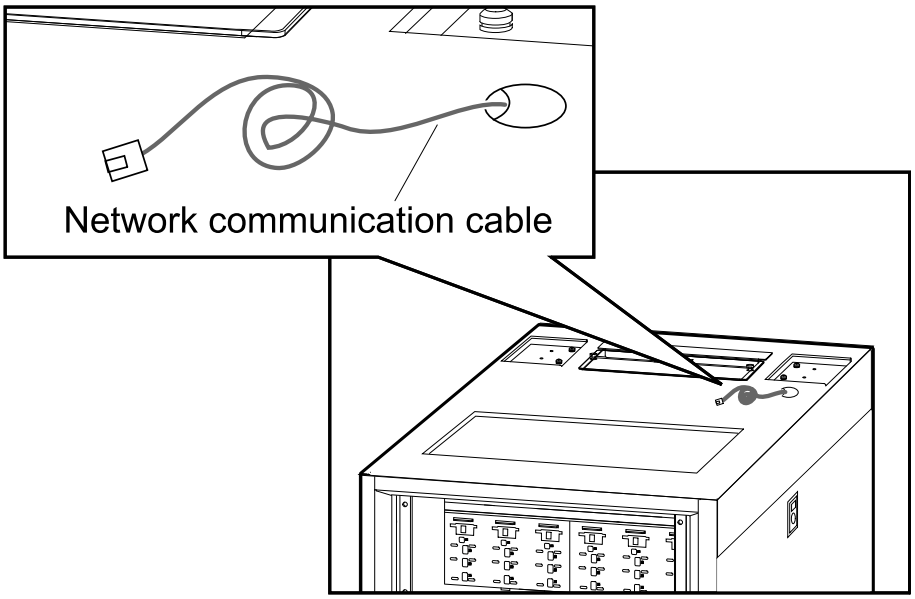

Install the Power Distribution Modules

⚠DANGER

HAZARD OF ELECTRIC SHOCK

To install a power distribution module:

- Turn off all power supplying the equipment and perform appropriate lockout/tagout procedures.

OR

- Place the UPS in battery operation.

See the operation manual for information on how to install the power distribution modules in battery operation.

Failure to follow these instructions will result in death or serious injury.

⚠CAUTION

RISK OF INJURY OR EQUIPMENT DAMAGE

- Install only Schneider Electric power distribution modules with matching output voltage.
- Install power distribution modules starting from the bottom of the panel to avoid cable congestion.
- Save filler plates for future reuse. If a module is removed, a filler plate must be installed to cover the open busbar.
- Slot locks (attached together in pairs) must always be installed on all power distribution module positions in the panel whether filled by a power distribution module or a filler plate.
- Make sure all breakers on the power distribution modules being installed are in the OFF (open) position.

Failure to follow these instructions can result in injury or equipment damage.

1. Insert the slot key in the slot lock.

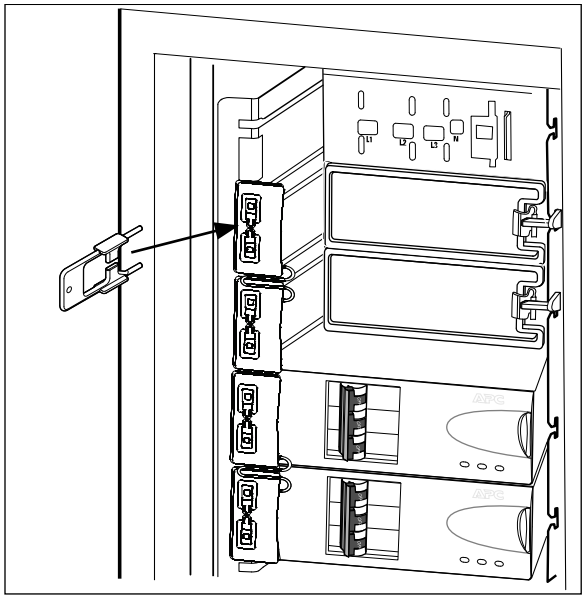

2. Squeeze the sides of the key inwards to grasp the slot lock firmly.

3. Pull the slot key out while squeezing to extract the slot lock from the slot.

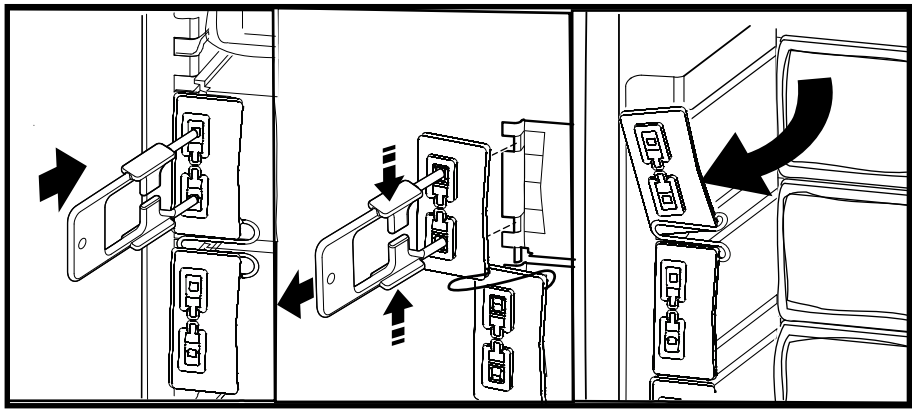

4. To remove a filler plate: Press down on the filler plate clip to release the locking mechanism and pull the filler plate directly towards you.

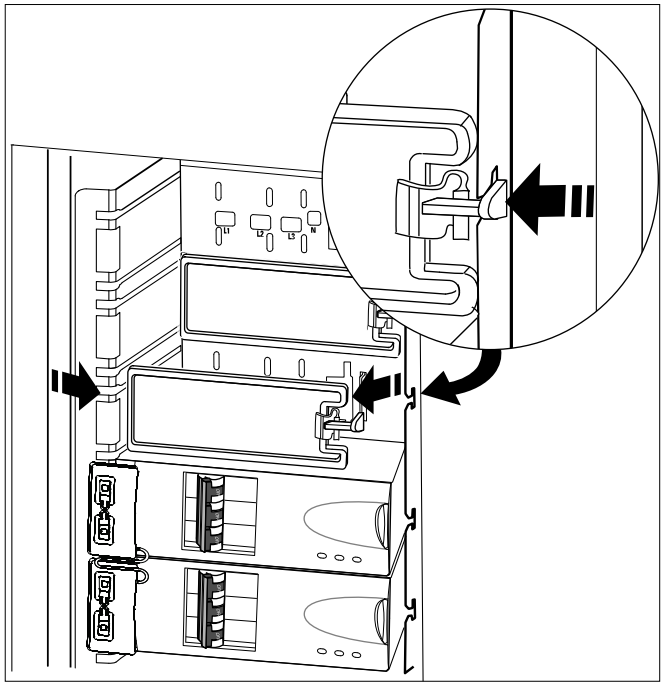

5. Press down on the red button to open the latch on the front of the power distribution module.
6. Route the cable on the power distribution module through the top of the cabinet.

   NOTE: Leave a minimum of 178 mm of slack in the cable behind the module. The slack is useful in case the module is ever removed or replaced. (254 to 508 mm (10 to 20 in) is recommended, but space restrictions in the PDU and cable diameter size will cause the amount of slack to necessarily vary.)

   NOTE: When installing power distribution modules near the top of the panel, feed the cable first, pull up the slack, and then fasten the module to the busbar to avoid cable congestion between the panel and the slot.
7. Slide the power distribution module into the panel via the slots. Make sure that you slide it all the way in, so it connects with the busbar.

8. Close the latch to secure the power distribution module.

Front View of the UPS

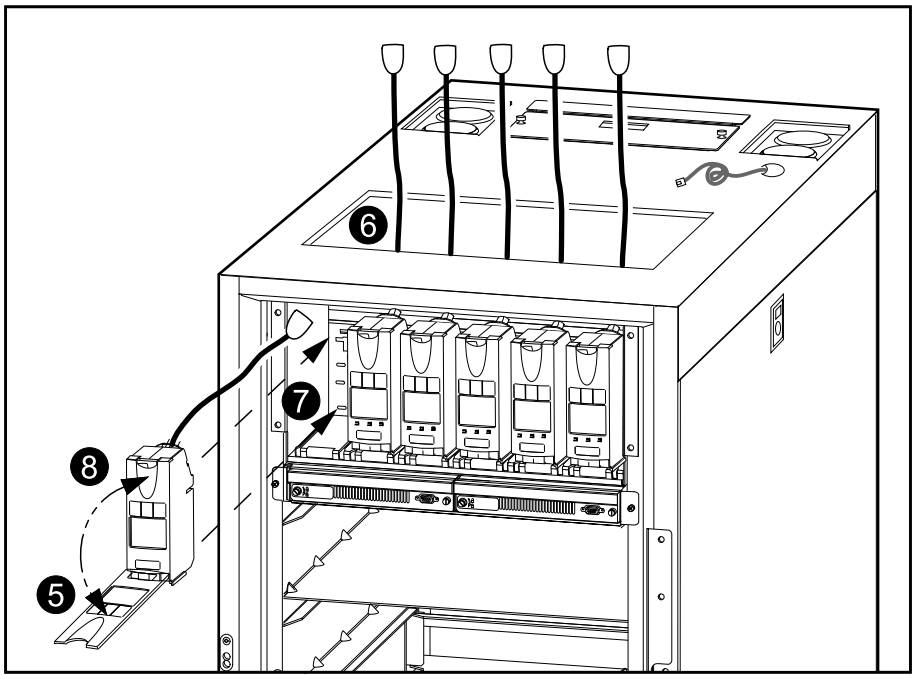

9. Set the required breakers on the new power distribution module to the ON (closed) position.
10. Only for power distribution positions that are empty:
    a. Insert the bottom tab of the filler plate into the slot and slide the filler plate towards the busbar.
    b. Snap the filler plate into position and check that the latch is secure.

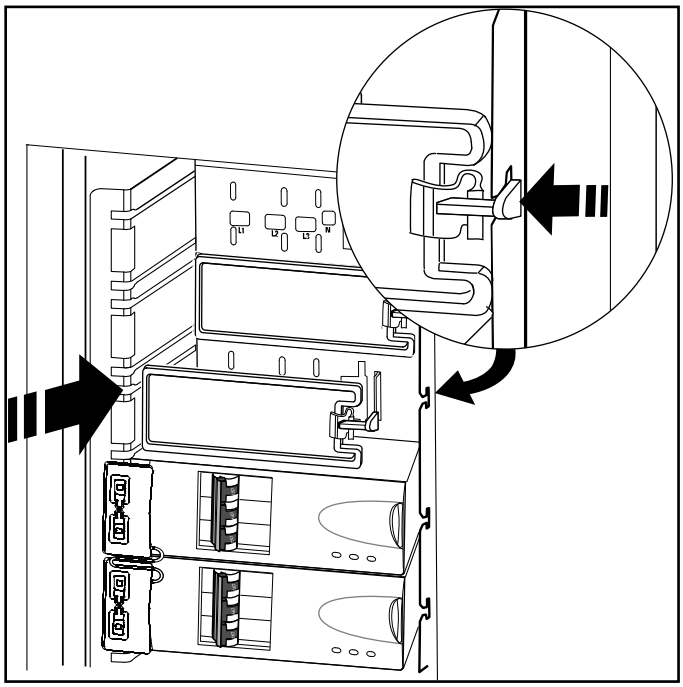

11. Install the slot lock by pressing it into the slots.

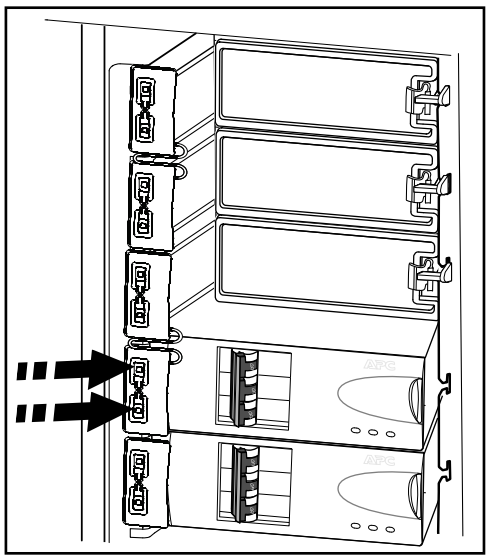

12. Connect the power distribution module cable to the appropriate equipment.

Install the Modular Battery Solution (Option)

The Symmetra PX 48 can monitor up to four modular battery cabinets.

⚠ DANGER

HAZARD OF ELECTRIC SHOCK, EXPLOSION OR ARC FLASH

Before installing the battery cables:

- Turn all battery circuit breakers OFF.
- Remove all the modular batteries from the cabinets, **or**
- Pull out all the modular batteries so the RED disconnect line is visible. Do not pull the batteries out further than the red disconnect line, otherwise the cabinet is in danger of tipping.

Failure to follow these instructions will result in death or serious injury.

⚠ CAUTION

RISK OF EQUIPMENT DAMAGE

The system accepts up to 150 mm² cables. The power terminal bolt diameter in the modular battery cabinet is 10 mm and the required torque value is 31.5 Nm.

Failure to follow these instructions can result in injury or equipment damage.

Connect Battery Cables to the UPS

Top View of the Cable Landing Area

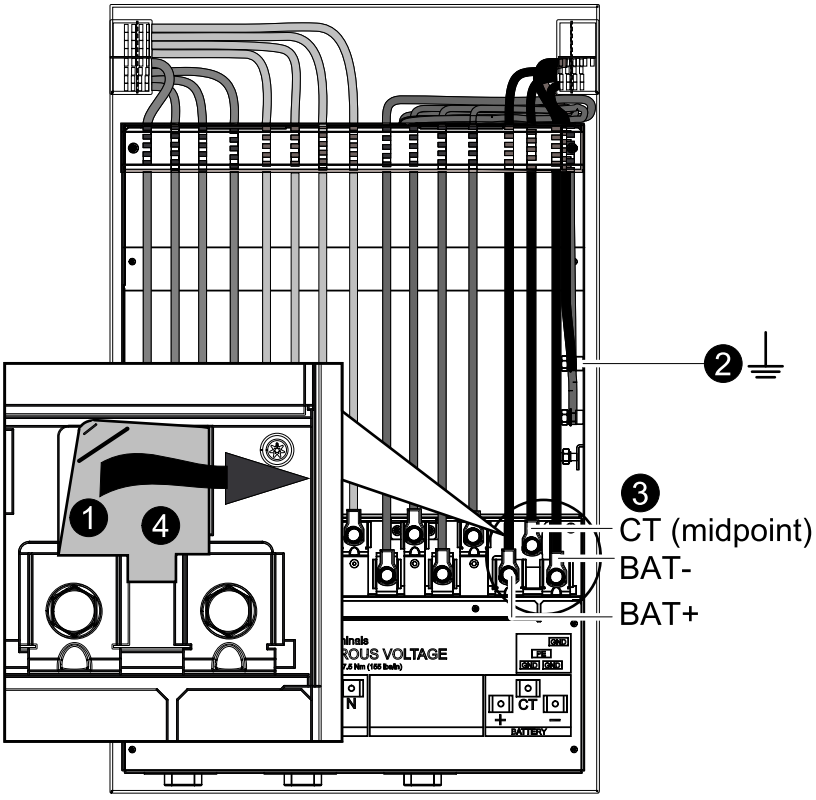

1. Lift up the insulation flap to get access to the CT (midpoint) connection.
2. Connect the ground cable.

3. Connect the BAT-, BAT+, and CT (midpoint) cables to the battery cable landings.
4. Reinstall the insulation flap.

Connect the Battery Cables between the Modular Battery Cabinets

Maximum Cable Length From UPS to Remote Modular Battery Cabinet

Signal cable	50 m
Power cable	200 m[8]

1. In top cable entry systems, loosen the two top bolts and remove the eight lower bolts from the upper cover plate on the modular battery cabinet. Lift the plate to remove it.

   Rear View of the Modular Battery Cabinet

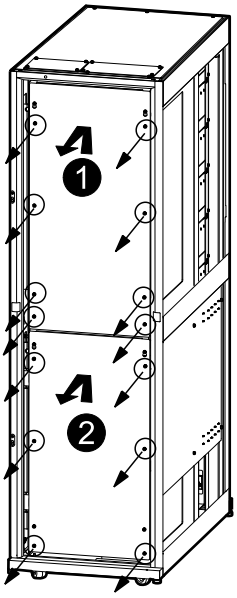

2. Loosen the two top bolts and remove the eight lower bolts from the lower cover plate. Lift the plate to remove it.

8. For power cables between 50 and 200 m, the voltage drop must be taken into account when the cable size is chosen. If the cables exceed the length limit this will result in erratic operation and reduced runtime.

3. Unwind the cables included in each modular battery cabinet. Remove the cable lugs from the cables that will connect to other modular battery cabinets. For the cables that will connect to the UPS, cut off the cable lug on the end that will be mounted in the modular battery cabinet.

Rear View of the Modular Battery Cabinet

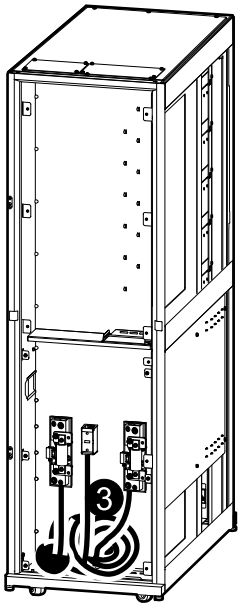

4. Connect the ground cable first, and then connect BAT+, BAT-, and CT (midpoint) cables between the modular battery cabinets in a daisy chain.

   NOTE: The required torque value is 31.0 Nm (275 lbf in) for the small screw and 42.4 Nm (375 lbf in) for the big screw for the Modular Battery Cabinet.

   Rear View of the Modular Battery Cabinets

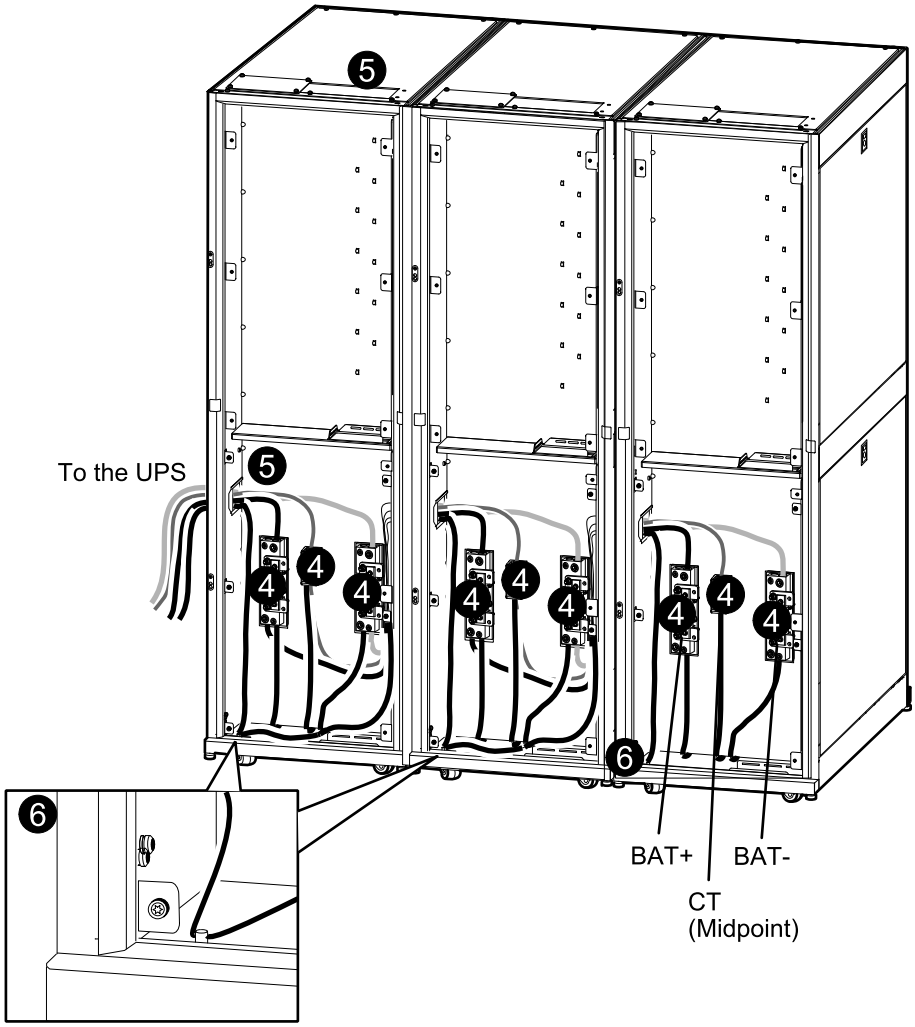

5. Route the ground cable and the BAT+, BAT-, and CT (midpoint) cables from the first modular battery cabinet to the UPS through the side, top, or bottom of the modular battery cabinet.

6. Connect the equipment grounding cable in the modular battery cabinet that is farthest from the UPS. Route it through the other modular battery cabinets by connecting it from modular battery cabinet to modular battery cabinet to the UPS through the side, top, or bottom of the modular battery cabinet.

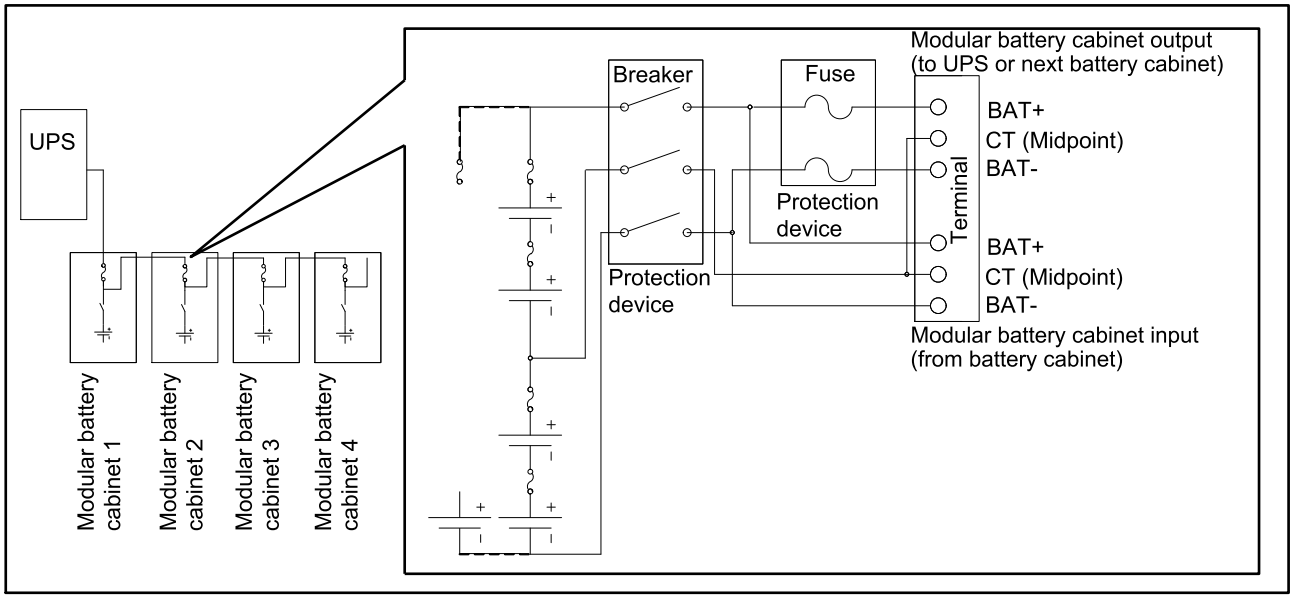

Fuse rating	125 A Class J
Breaker rating	250 A with thermal and magnetic trip-unit

7. Set the cabinet address on the front of each modular battery cabinet (**1** for the first modular battery cabinet, **2** for the second modular battery cabinet, etc.).

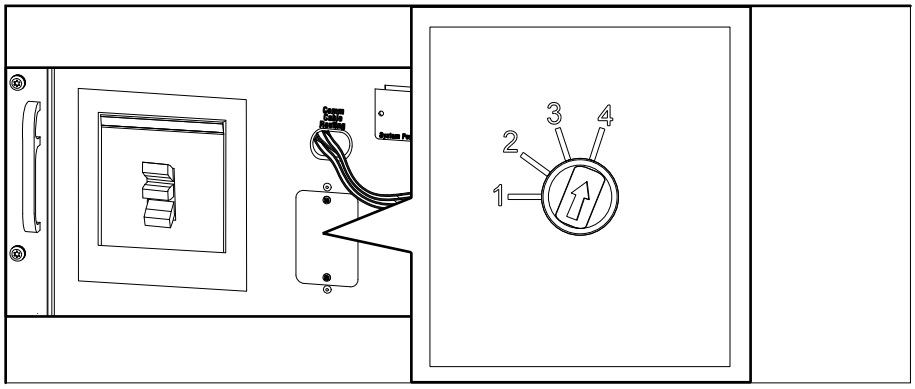

Connect Modular Battery Cabinet Communication Cables

Move the cabinets just close enough so that the communication cables can reach between them. The cabinets should not be positioned too close to one another. The extra space is needed to complete the wiring.

Overview of the Communication Cables

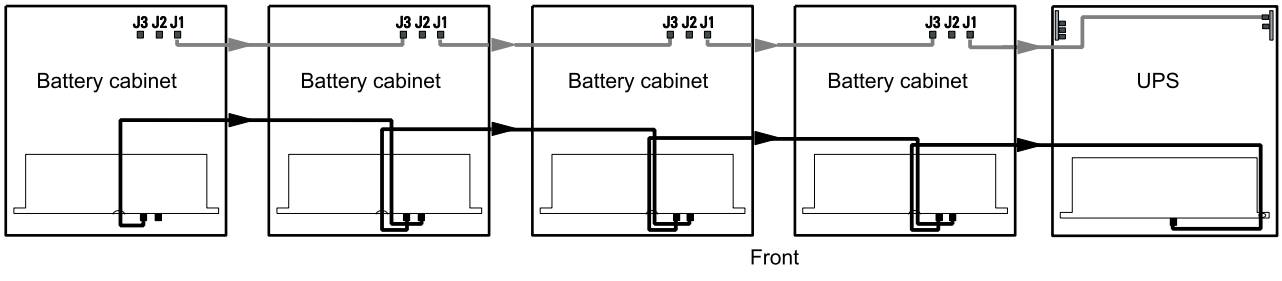

1. Route the battery breaker trip cable from J1 in the first modular battery cabinet to J3 in the next modular battery cabinet. Repeat the procedure for all modular battery cabinets.

Rear View of the Modular Battery Cabinets

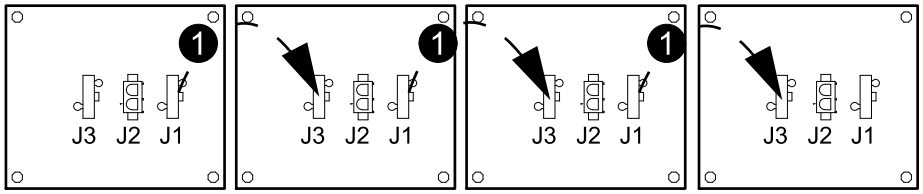

2. Route the battery breaker trip cable from J1 in the last modular battery cabinet to J27 on the EPO/ancillary interface board (0P4123) in the UPS.

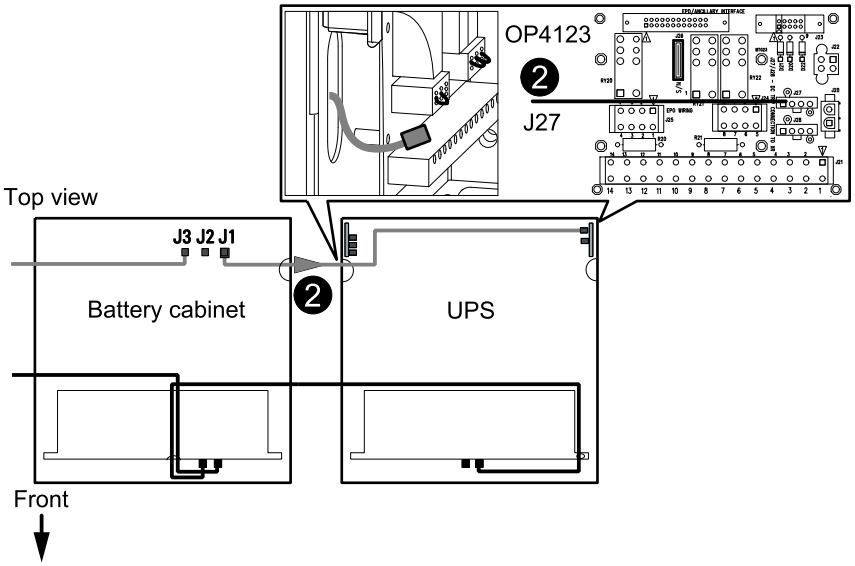

Wiring Diagram

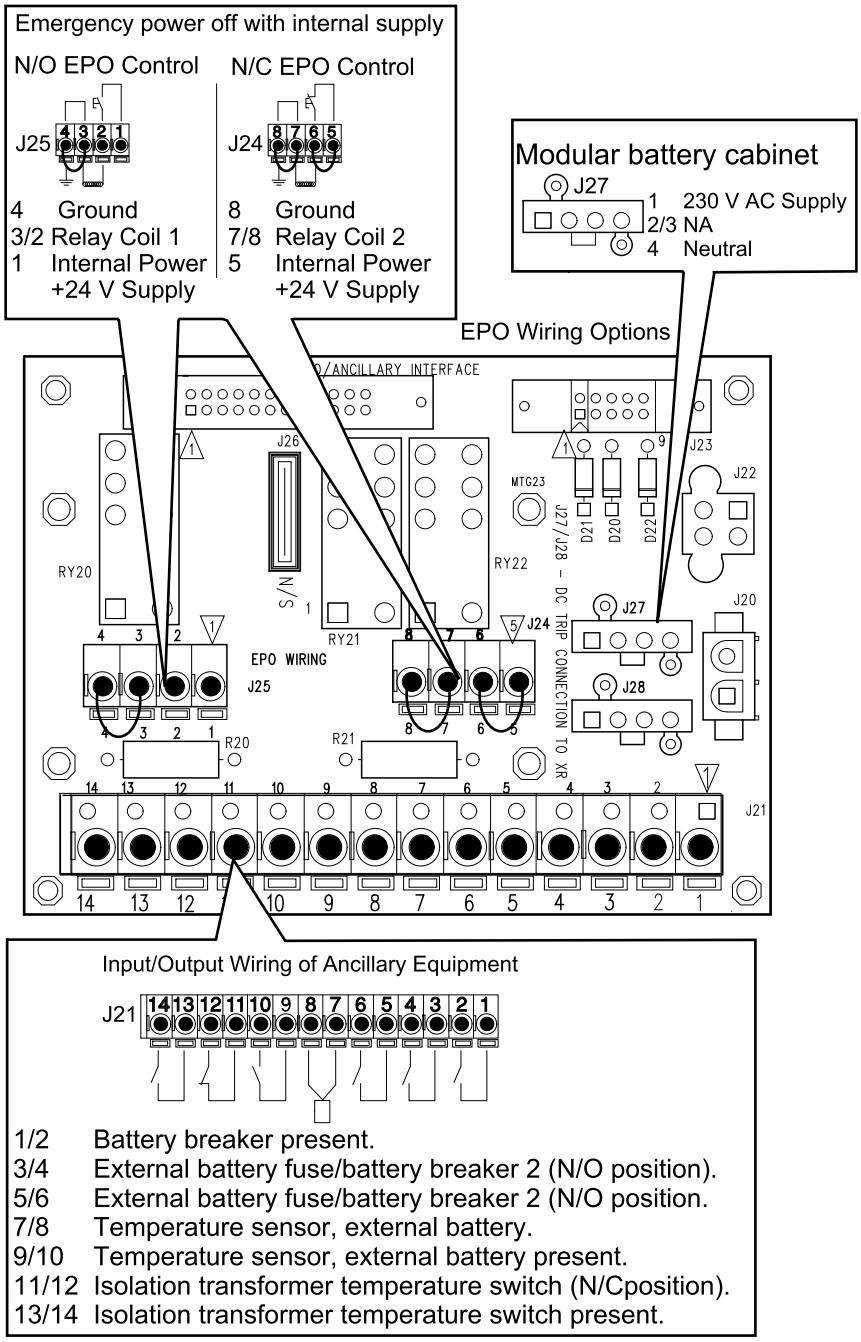

3. Route the communication cable from XR Communications port 1 in each modular battery cabinet to port 2 in the next modular battery cabinet. Remove the terminator when necessary.

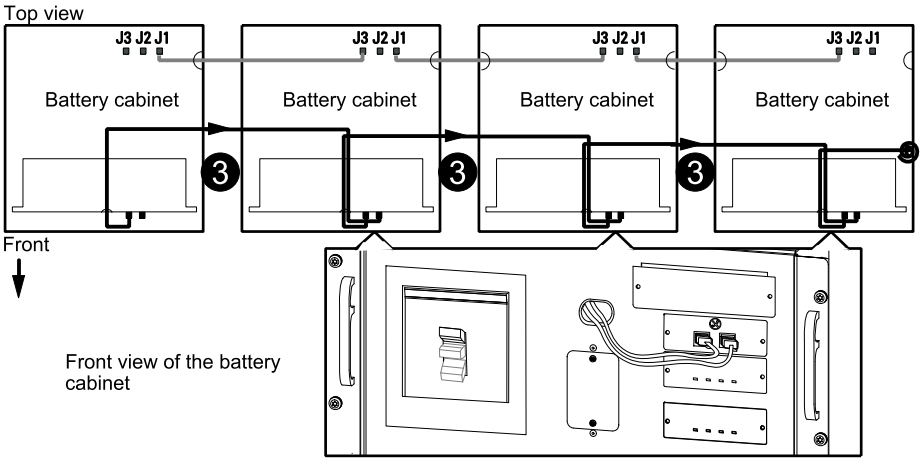

4. Route the communication cable from XR Communications port 1 in the last modular battery cabinet to the UPS XR Communications port 2.

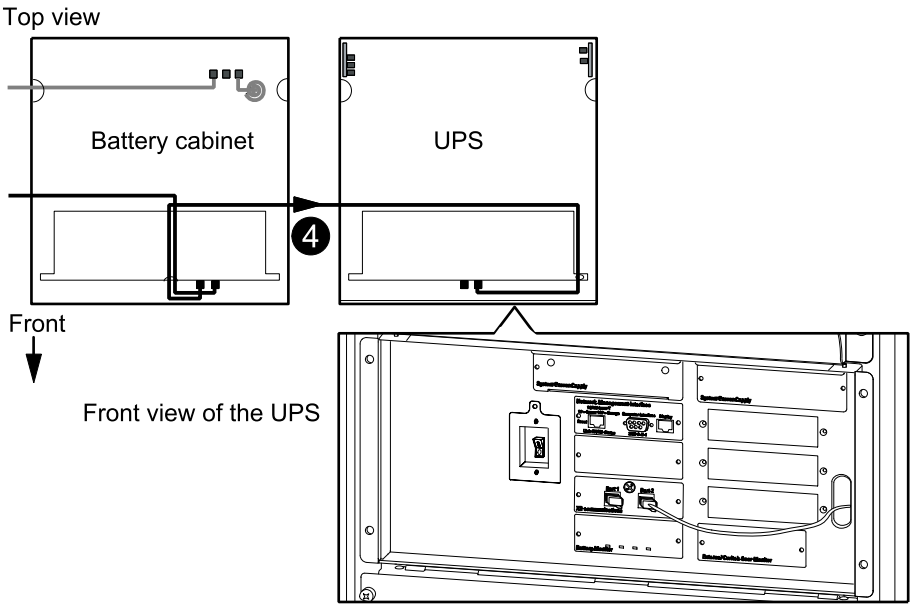

Checklist

Check that the power wiring is torqued to correctly: UPS: 17.5 Nm Modular battery cabinet: 31.5 Nm	
Verify clockwise phase-rotation (L1, L2, L3) and make sure a neutral connection is present.	
Leave a wiring diagram on site for service personnel.	
Reinstall all wiring access panels on the UPS.	
For any optional equipment, refer to product-specific manuals.	
If modular battery cabinets are installed, make sure that all DC breakers (if applicable) are in the OFF position.	

Schneider Electric
35 rue Joseph Monier
92500 Rueil Malmaison
France

+ 33 (0) 1 41 29 70 00

www.schneider-electric.com

As standards, specifications, and design change from time to time, please ask for confirmation of the information given in this publication.

© 2012 – 2017 Schneider Electric. All rights reserved.

990–3151G-001