EcoAisle



Intelligent Containment Solutions that Increase Data Center Cooling Efficiency while Protecting Critical IT Equipment and Personnel.

APC by Schneider Electric

EcoAisle Containment

Hot and cold air containment systems designed to maximize cooling predictability, capacity, and efficiency at the rack, row or room level



The EcoAisle minimizes the hot and cold air mixing within the IT environment.

An unpredictable data center environment is common among IT managers. In today's data centers, traditional cooling approaches involve complex air distribution systems that tend to be unpredictable and leave many customers guessing where the cold air goes. With the EcoAisle containment solution, Schneider Electric has taken the guess work out of data center cooling. Deploying a containment solution minimizes air mixing, increases efficiency and provides a predictable cooling architecture.

Applications

- Hot Air Containment
- Cold Air Containment

Ceiling Panel



Ducted



Check out White Paper #135:
"Impact of Hot and Cold Aisle Containment on Data Center Temperature and Efficiency"

http://www.apc.com/wp?wp=135

APC by Schneider Electric

EcoAisle Architecture

Intelligent air containment solutions that protect critical IT equipment and personnel



An EcoAisle solution places a barrier between the hot and cold airstreams within an IT Environment.

The EcoAisle provides a direct air path between the cold air supply and the IT inlet or a direct air path between the hot IT exhaust and the cooling unit inlet.

Flexible, Reliable, Standardized Solutions

- Modular design allows cluster / module / pod / zone expansion as IT needs change and grow
- Greenfield / Brownfield Environments
- Raised / Slab Floor
- Non conventional IT spaces / Office Space
- World Wide Availability



Initial Deployment

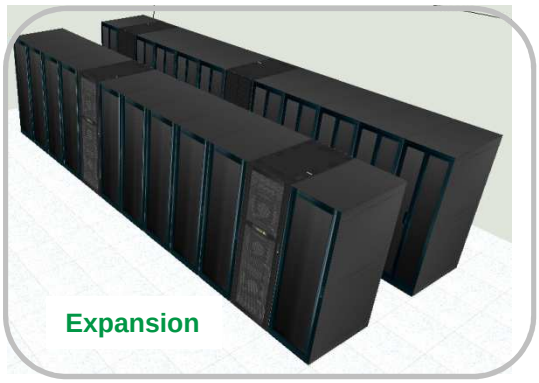

Expansion



Designed

Check out White Paper #153:
"Implementing Hot and Cold Air Containment in Existing Data Centers"

http://www.apc.com/wp?wp=153

APC by Schneider Electric

Active Flow Control

Increased Availability by Actively Responding to thermal changes

- Provides visibility into the cooling system operation, health and capacity
- Right sizes cooling airflow to the IT equipment airflow





1. IT airflow changes as load is increased / decreased



2. Active Flow Controller senses airflow change in contained aisle



3. Active Flow Controller sends signal to cooling units to adjust airflow to balance with the IT requirement



4. Active Flow Controller combined with rack inlet temperature sensor ensures IT equipment is efficiently kept at the proper temperature 24/7

APC by Schneider Electric

Visibility to cooling system operation

- LED light ring provides a visual indicator for the contained zone
  - Red = Insufficient Cooling Airflow
  - Green = Optimal Cooling Airflow
  - Blue = Excess Cooling Airflow

Mounting Flexibility

- Sliding Door header
- Duct
- Ceiling panel
- 1U rack mount

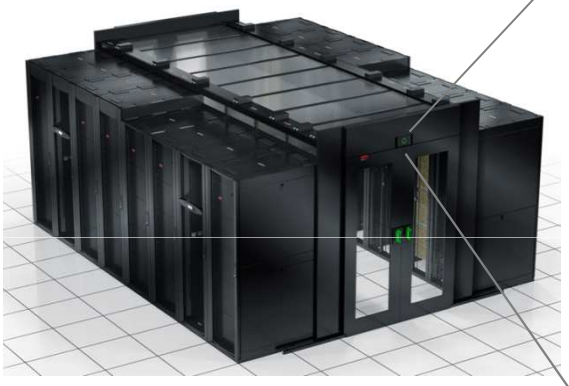

Insufficient Airflow



Optimal Airflow



Excess Airflow



Door Status Compatible

- Connected to a door switch to prevent cooling unit control changes due to the door opening to gain access to the contained environment.

Power and Communication

- Power
  - InRow unit will provide power through the A-Link bus
  - Wall wart – AP9505I (non InRow application)
- Communication
  - A-Link bus connection to InRow cooling units
  - Modbus to Room cooling units

APC by Schneider Electric

Flexibility

Flexible to support changing business requirements as IT environments / solutions are not created equal

Ceiling Panel Containment

- Hot Aisle Containment
  - Row Cooling
- Cold Aisle Containment
  - Row Cooling
  - Room Cooling

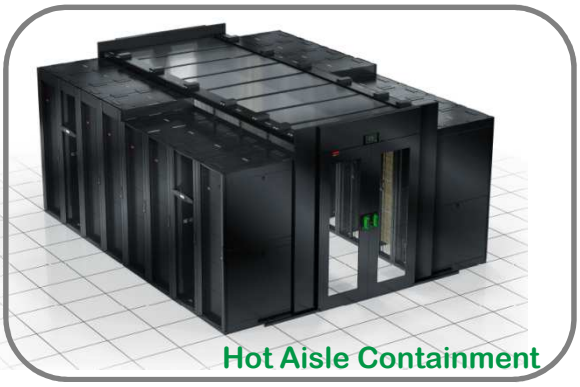
Hot Aisle Containment


Cold Aisle Containment


Single Row

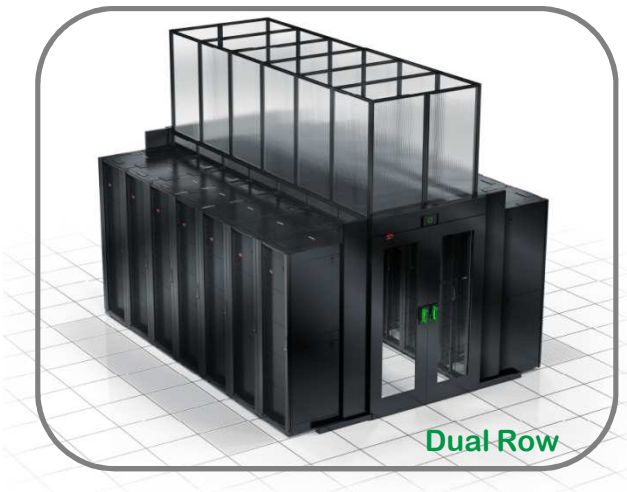
Dual Row

Duct Containment

- Hot Aisle Containment
  - Room Cooling
- Cold Aisle Containment
  - Room Cooling

APC by Schneider Electric



Variable Aisle Width
900 – 1800mm (36 – 72in)

Height / Depth
Adapters



Variable Rack
Height
42U – 48U





Variable Rack Depth
900 – 1200mm (36 – 48in)



Adjustable Height
Supports

Variable Duct Height
500 – 1500mm (20 – 60in)

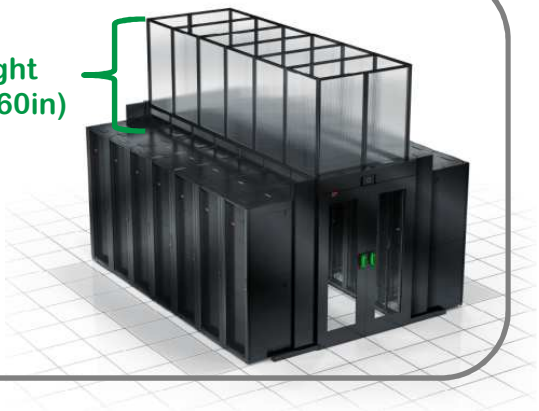



Variable Rack Width /
Row Length



Blanking Panels

APC
by Schneider Electric

Fire Safe System

Protecting critical IT equipment and personnel in case of a thermal event

Containment systems are required to achieve the maximum efficiency of the IT cooling equipment. The barrier between the hot and cold airstreams is also a barrier between the fire suppression and the thermal event. This fire safe system will eliminate the barrier allowing the suppression system to safely and effectively extinguish the thermal event.

Temperature Activation

- UL723S Listed for use below a sprinkler suppression system.
- Rated to operate at temperatures above 37°C (100°F)

Smoke Activation

- Conforms to NFPA



Audible / Visible Alarm

- Alerts personnel to a thermal event allowing them to exit the aisle safely

Fire safe control

- Integrated controls hold panels in normal position allowing personnel to exit the aisle safely before panel release.

Durable design

- Panels and lock system resettable in the case of a drop away event.
- No parts to replace

Normal Operation

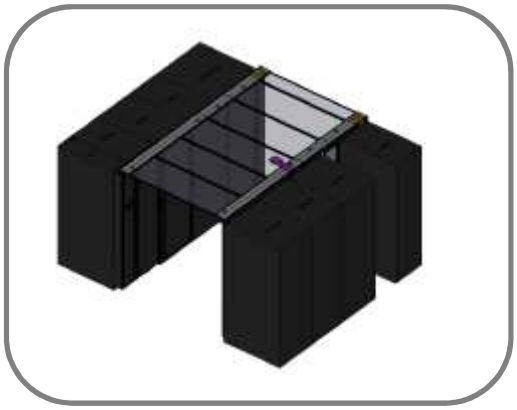

Thermal Event

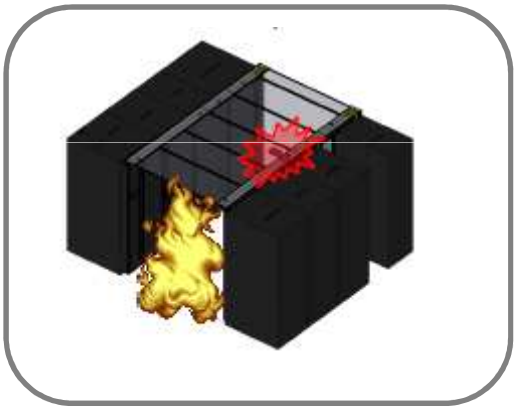

Ceiling drop away

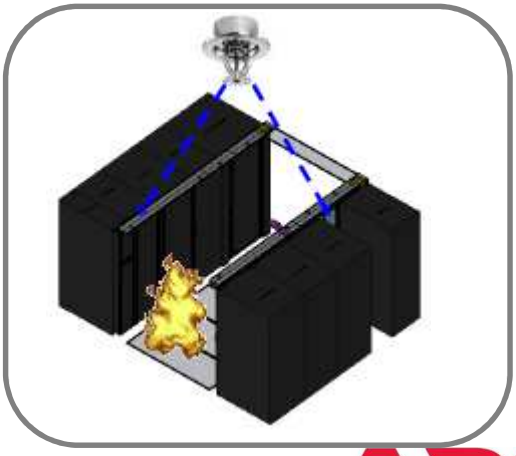

APC by Schneider Electric

EcoLEDgy Driven Lighting

Integrated High Efficiency LED lighting with on/off motion sensors

Many IT environments layouts are planned around the floor tiles, but planning also needs to happen for the illumination of the aisles between the rows of racks. The deployment of the solution may change causing the lighting at the room level to be positioned away from the aisle.



The EcoAisle system provides an integrated lighting solution that will provide illumination to the aisle.

High Efficiency LED Lights

•Long lasting energy efficient LED Lighting
•Available spacing
- •End to End
- •300mm (12 in)
- •600mm (24 in)



Motion controlled

• Lighting system is equipped with motion sensors providing an efficient means illumination control



Manual override

• A manual switch to allow the user to turn off the lights when exiting the aisle, providing an extra level of control and energy conservation.



APC by Schneider Electric

Safe Slide Doors

Break away sliding door enables quick exit in the event of an emergency

Containment solutions require the ends of the aisle to be contained and accessible.



Sliding Doors

•Provide access to the aisle with a limited amount of floor space consumed.

Door Lock

•Provide additional security to the IT equipment by limiting access to the contained aisle

Auto Close

•Automatically slides the doors closed from the open position

Hold Open

• Allows the user to keep the doors in an open position when entering or leaving the aisle.



Emergency Breakaway

• Allows the user(s) to safely exit the aisle with a push button release
• Resettable no parts to replace

Door Status Indicator

• Integrated to allow the Active Flow Controller to know the status of the door



APC by Schneider Electric

Over Aisle / Rack Access

Removal of individual panels to allow access above the rack or aisle

Containment solutions limit access to the top of the racks or aisle for cabling and or maintenance.

Ceiling Panel

• Allows for easy installation and removal without the use of tools.
•Allows for over aisle or top of rack access.

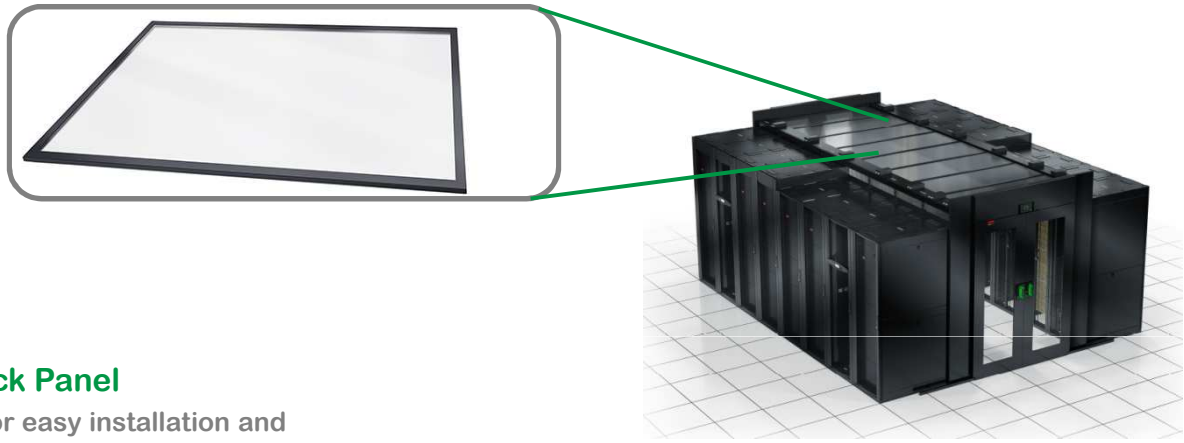

Air Block Panel

• Allows for easy installation and removal without the use of tools.
•Allows for top of rack access.

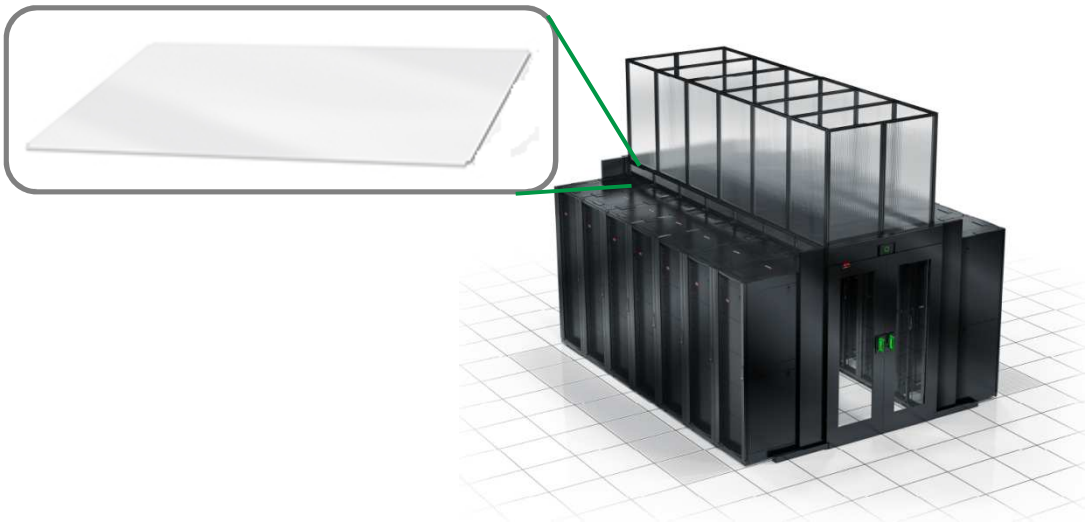

APC by Schneider Electric

System Part Numbers

Ceiling Containment

Part Number	Description
ACDC2000 - 2006	Ceiling Panel Mounting System
ACDC2100 - 2107	Ceiling Panels (Standard and V-0)

Duct Containment

Part Number	Description
ACDC2300 - 2302	Duct Panel Mounting System
ACDC2303 - 2311	Duct Panels (Standard and V-0)

Doors

Part Number	Description
ACDC2400 – 2408	Safe Slide Door System
ACDC2410 - 2411	Curtain Door Mounting System
ACAC11008 – ACAC11009	Curtain Doors
ACDC1009, 1016, 1017, 1020, 1021	Door and Frame Assembly - Swinging

Options / Accessories

Part Number	Description
ACAC2200 - 22001	Active Flow Controller
ACDC2015 - 2017	Fire Safe Ceiling System
ACDC2018 - 2019	EcoLEDgy Lighting System
ACDC2200 - 2205	Adjustable Mounting Support System
ACDC2500 - 2518	Roof Height Adapters
ACDC2550 - 2553	Depth Adapters
ACDC2575 - 2578	Blanking Panels







APC by Schneider Electric