Operation and Maintenance Manual NT/NTA855 Big Cam III

Worldwide Construction/Industrial and G (Generator) - Drive Engines

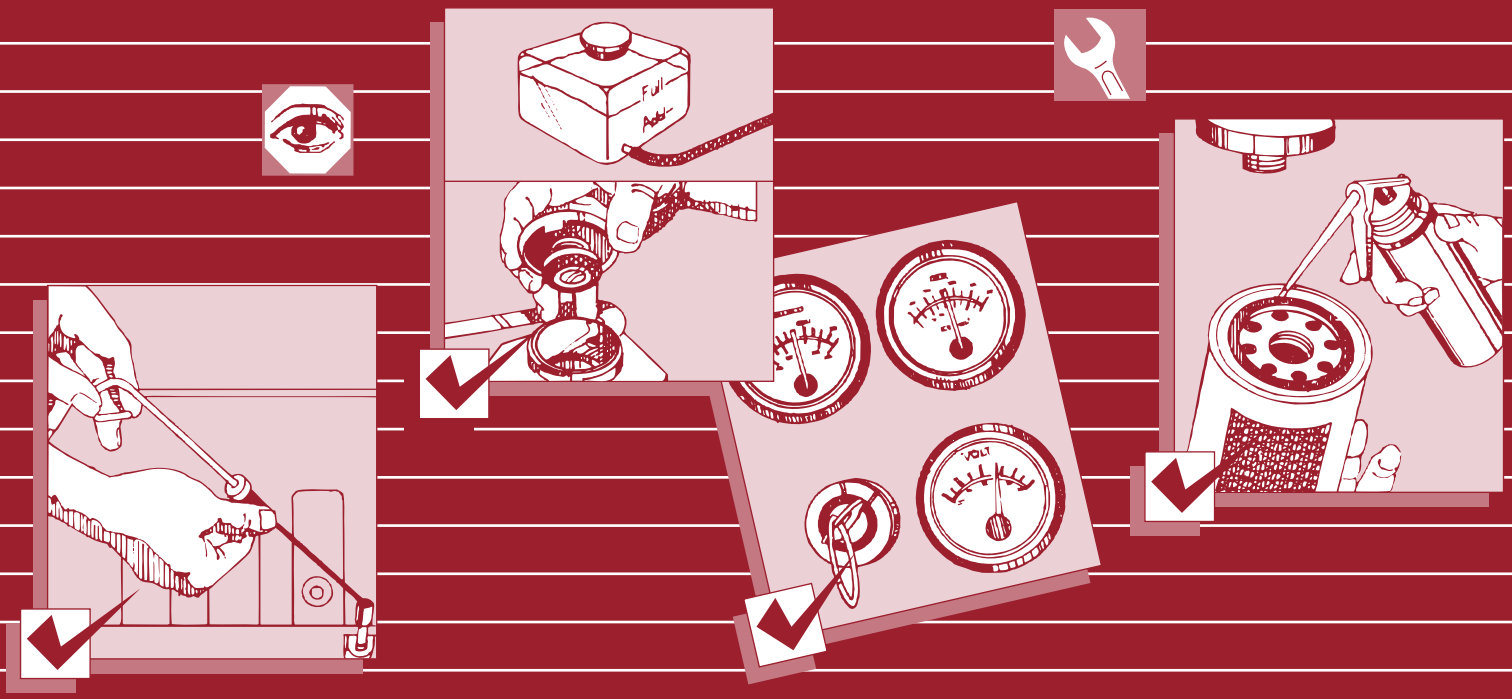

Cummins Customer Assistance Center
1-800-DIESELS (1-800-343-7357)
APPLICABLE ONLY IN U.S.A AND CANADA

Operation and Maintenance Manual NT/NTA855 Big Cam III

Worldwide Construction/Industrial and G (Generator) - Drive Engines

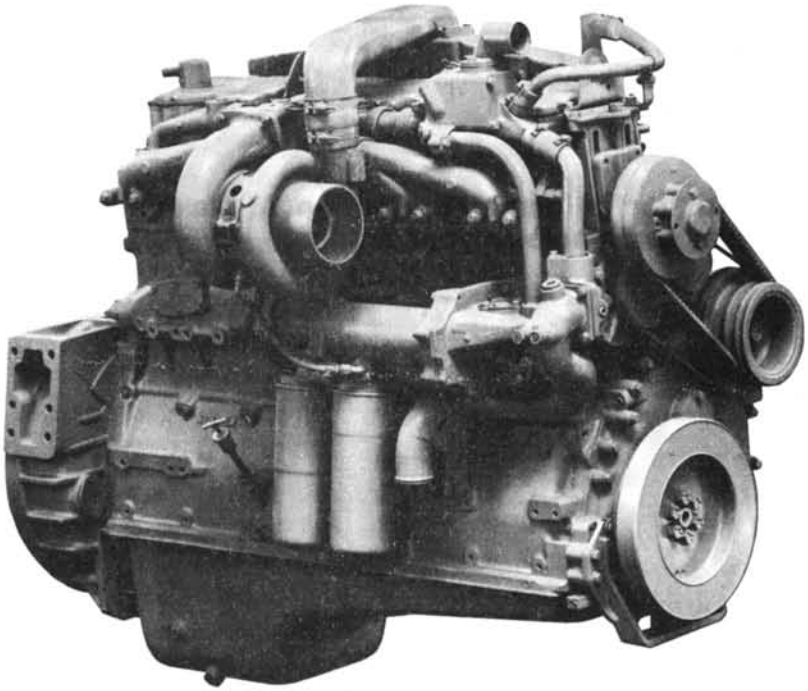

Big Cam III

Copyright© 1994
Cummins Engine Company, Inc.
All Rights Reserved

Bulletin No. 3666002-03
Printed USA 6-94 932

Foreword

This manual contains information for the correct operation and maintenance of your Cummins engine. It also includes important safety information, engine and systems specifications, troubleshooting guidelines, and listings of Cummins Authorized Repair Locations and component manufacturers.

Keep this manual with the equipment. If the equipment is traded or sold, give the manual to the new owner.

The information, specifications, and recommended maintenance guidelines in this manual are based on information in effect at the time of printing. Cummins Engine Company, Inc. reserves the right to make changes at any time without obligation. If you find differences between your engine and the information in this manual, contact your local Cummins Authorized Repair Location.

The latest technology and the highest quality components were used to produce this engine. When replacement parts are needed, we recommend using only genuine Cummins or ReCon® exchange parts. These parts can be identified by the following trademarks:



Note: Warranty information is located in Section W. Make sure you are familiar with the warranty or warranties applicable to your engine.

Table of Contents

	Section
Introduction	i
Engine Identification	E
Operating Instructions	1
Maintenance Guidelines	2
Daily Maintenance Guidelines	3
Weekly Maintenance Guidelines	4
Maintenance Procedures Every 250 Hours or 6 Months	5
Maintenance Procedures Every 1500 Hours or 1 Year	6
Annual Maintenance Procedures	7
Maintenance Procedures Every 6000 Hours or 2 Years	8
Other Maintenance Procedures	9
System Diagrams	D
Troubleshooting	T
Adjustment, Repair, and Replacement	A
Specifications and Torque Values	V
Service Assistance	S
Component Manufacturers	C
Warranty	W
Literature	L
Index	X

Section i - Introduction

Section Contents

Page

About the Manual i-2

Definition of Terms i-9

General Safety Instructions i-8
Important Safety Notice i-8

How to Use the Manual i-2

Illustrations i-7

Symbols i-3

To the Owner and Operator i-2

To the Owner and Operator

Preventative maintenance is the easiest and least expensive type of maintenance. Follow the maintenance schedule recommendations outlined in Maintenance Guidelines (Section 2).

Keep records of regularly scheduled maintenance.

Use the correct fuel, oil, and coolant in your engine as specified in Engine Specifications, Section V.

Cummins uses the latest technology and the highest quality components to produce its engines. Cummins recommends using only genuine Cummins parts and ReCon® exchange parts.

Personnel at Cummins Authorized Repair Locations have been trained to provide expert service and parts support. If you have a problem that can **not** be resolved by a Cummins Authorized Repair Location, follow the steps outlined in Service Assistance (Section S).

About the Manual

This manual contains information needed to correctly operate and maintain your engine as recommended by Cummins Engine Company, Inc. Additional service literature can be ordered from your Cummins distributor. For problems with literature orders, contact 1-800-DIESELS (1-800-343-7357) (for U.S.A. and Canada).

This manual does **not** cover vehicle or equipment maintenance procedures. Consult the vehicle or equipment manufacturer for specific maintenance recommendations.

Both metric and U.S. customary values are listed in this manual. The metric value is listed first, followed by the U.S. customary in brackets.

Numerous illustrations and symbols are used to aid in understanding the meaning of the text. Refer to page i-3 for a complete listing of symbols and their definitions.

Each section is preceded by a "Section Contents" to aid in locating information.

How to Use the Manual

This manual is organized according to intervals at which maintenance on your engine is to be performed. A table that states the required intervals and the checks to be made is located in Section 2. Locate the interval at which you are performing maintenance. Then follow the steps given in that section for all the procedures to be performed. In addition, all of the procedures done under previous maintenance intervals **must** be performed.

Keep a record of all the checks and inspections made. A record form for recording date, mileage/kilometer or hours, and what maintenance checks were performed is located in Section 2.

Refer to Section T for a guide to troubleshoot your engine. Follow the directions given on page T-2 to locate and correct engine problems.

Refer to Section V for specifications recommended by Cummins Engine Company, Inc., for your engine. Specifications and torque values for each engine system are given in that section.

Symbols

The following symbols have been used in this manual to help communicate the intent of the instructions. When one of the symbols appears, it conveys the meaning defined below:



WARNING - Serious personal injury or extensive property damage can result if the warning instructions are **not** followed.



CAUTION - Minor personal injury can result or a part, an assembly, or the engine can be damaged if the caution instructions are **not** followed.



Indicates a **REMOVAL or DISASSEMBLY** step.



Indicates an **INSTALLATION or ASSEMBLY** step.



INSPECTION is required.



CLEAN the part or assembly.



PERFORM a mechanical or time **MEASUREMENT**.



LUBRICATE the part or assembly.



Indicates that a **WRENCH or TOOL SIZE** will be given.



TIGHTEN to a specific torque.



PERFORM an electrical **MEASUREMENT**.



Refer to another location in this manual or another publication for additional information.



The component weighs 23 kg [50 lb] or more. To avoid personal injury, use a hoist or get assistance to lift the component.

Simbolos

Los símbolos siguientes son usados en este manual para clarificar el proceso de las instrucciones. Cuando aparece uno de estos símbolos, su significado se especifica en la parte inferior.



ADVERTENCIA - Serios daños personales o daño a la propiedad puede resultar si las instrucciones de Advertencia **no** se consideran.



PRECAUCION - Daños menores pueden resultar, o de piezas del conjunto o el motor puede averiarse si las instrucciones de Precaución **no** se siguen.



Indica un paso de **REMOCION** o **DESMONTAJE.**



Indica un paso de **INSTALACION** o **MONTAJE.**



Se requiere **INSPECCION.**



LIMPIESE la pieza o el montaje.



EJECUTESE una **MEDICION** mecánica o del tiempo.



LUBRIQUESE la pieza o el montaje.



Indica que se dará una **LLAVE DE TUERCAS** o el **TAMAÑO DE HERRAMIENTA.**



APRIETESE hasta un par torsor específico.



EJECUTESE una **MEDICION** eléctrica.



Para información adicional refiérase a otro emplazamiento de este manual o a otra publicación anterior.



El componente pesa 23 kg [50 lb] o mas. Para evitar dano corporal empleen una cabria u obtengan ayuda para elevar el componente.

Symbole

In diesem Handbuch werden die folgenden Symbole verwendet, die wesentliche Funktionen hervorheben. Die Symbole haben folgende Bedeutung:



WARNUNG - Wird die Warnung **nicht** beachtet, dann besteht erhöhte Unfall- und Beschädigungsgefahr.



VORSICHT - Werden die Vorsichtsmassnahmen **nicht** beachtet, dann besteht Unfall- und Beschädigungsgefahr.



AUSBAU bzw. **ZERLEGEN.**



EINBAU bzw. **ZUSAMMENBAU.**



INSPEKTION erforderlich.



Teil oder Baugruppe **REINIGEN.**



DIMENSION - oder **ZEITMESSUNG.**



Teil oder Baugruppe **ÖLEN.**



WERKZEUGGRÖSSE wird angegeben.



ANZUG auf vorgeschriebenes Drehmoment erforderlich.



Elektrische **MESSUNG DURCHFÜHREN.**



Weitere Informationen an anderer Stelle bzw. in anderen Handbüchern.



Das teil weigt 23 kg [50 lb] oder mehr. Zur vermeidung von koerperverletzung winde benutzen oder hilfe beim heben des teils in anspruch nehmen.

Symboles

Les symboles suivants sont utilisés dans ce manuel pour aider à communiquer le but des instructions. Quand l'un de ces symboles apparaît, il évoque le sens défini ci-dessous:



AVERTISSEMENT - De graves lésions corporelles ou des dommages matériels considérables peuvent survenir si les instructions données sous les rubriques "Avertissement" **ne** sont **pas** suivies.



ATTENTION - De petites lésions corporelles peuvent survenir, ou bien une pièce, un ensemble ou le moteur peuvent être endommagés si les instructions données sous les rubriques "Attention" **ne** sont **pas** suivies.



Indique une opération de **DEPOSE.**



Indique une opération de **MONTAGE.**



L'INSPECTION est nécessaire.



NETTOYER la pièce ou l'ensemble.



EFFECTUER une **MESURE** mécanique ou de temps.



GRAISSER la pièce ou l'ensemble.



Indique qu'une **DIMENSION DE CLE** ou **D'OUTIL** sera donnée.



SERRER à un couple spécifique.



EFFECTUER une **MESURE** électrique.



Se reporter à un autre endroit dans ce manuel ou à une autre publication pour obtenir des informations plus complètes.



Le composant pese 23 kg [50 lb] ou davantage. Pour eviter toute blessure, employer un appariel de levage ou demander de l'aide pour le soulever.

Illustrations

Use the illustrations in this manual as a guide to perform the action or the repair described. Many illustrations are generic and will **not** look exactly like the engine or the parts used in your application. In order to provide clarity to illustrations, some illustrations show parts removed that are **not** related to the specific parts given in the text.

Most of the illustrations contain symbols to indicate an action required or to indicate an **acceptable (OK)** or **unacceptable (not OK)** condition.

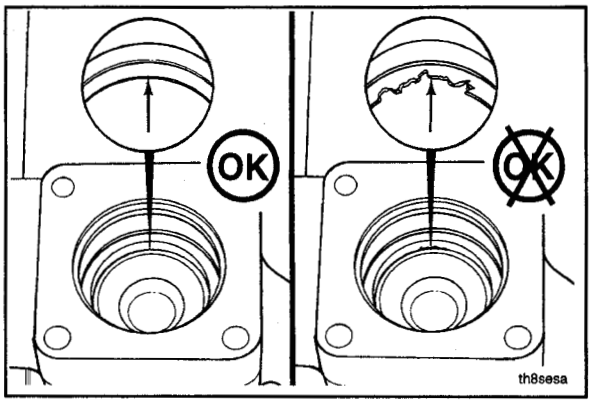

The illustrations are intended to show repair or replacement procedures. The illustration can differ from your application, but the procedure given will be the same.

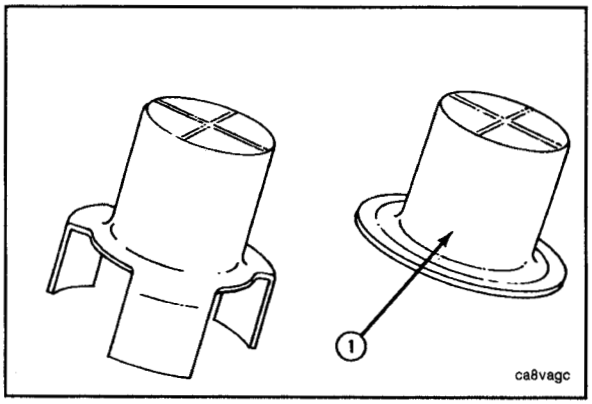

General Safety Instructions

Important Safety Notice

⚠ WARNING ⚠

Improper practices or carelessness can cause burns, cuts, mutilation, asphyxiation or other bodily injury or death.

Read and understand all of the safety precautions and warnings before performing any repair. This list contains the general safety precautions that **must** be followed to provide personal safety. Special safety precautions are included in the procedures when they apply.

- Make sure the work area surrounding the product is dry, well lit, ventilated; free from clutter, loose tools, parts, ignition sources and hazardous substances. Be aware of hazardous conditions that can exist.
- **Always** wear protective glasses and protective shoes when working.
- Rotating parts can cause cuts, mutilation or strangulation.
- Do **not** wear loose-fitting or torn clothing. Remove all jewelry when working.
- Disconnect the battery (negative [-] cable first) and discharge any capacitors before beginning any repair work. Disconnect the air starting motor if equipped to prevent accidental engine starting. Put a "Do **Not** Operate" tag in the operator's compartment or on the controls.
- Use ONLY the proper engine barring techniques for manually rotating the engine. Do **not** attempt to rotate the crankshaft by pulling or prying on the fan. This practice can cause serious personal injury, property damage, or damage to the fan blade(s) causing premature fan failure.
- If an engine has been operating and the coolant is hot, allow the engine to cool before you slowly loosen the filler cap and relieve the pressure from the cooling system.
- Do **not** work on anything that is supported ONLY by lifting jacks or a hoist. **Always** use blocks or proper stands to support the product before performing any service work.
- Relieve all pressure in the air, oil, and the cooling systems before any lines, fittings, or related items are removed or disconnected. Be alert for possible pressure when disconnecting any device from a system that utilizes pressure. Do **not** check for pressure leaks with your hand. High pressure oil or fuel can cause personal injury.
- To prevent suffocation and frostbite, wear protective clothing and ONLY disconnect liquid refrigerant (freon) lines in a well ventilated area. To protect the environment, liquid refrigerant systems **must** be properly emptied and filled using equipment that prevents the release of refrigerant gas (fluorocarbons) into the atmosphere. Federal law requires capture and recycling refrigerant.
- To avoid personal injury, use a hoist or get assistance when lifting components that weigh 23 kg [50 lb] or more. Make sure all lifting devices such as chains, hooks, or slings are in good condition and are of the correct capacity. Make sure hooks are positioned correctly. **Always** use a spreader bar when necessary. The lifting hooks **must not** be side-loaded.
- Corrosion inhibitor contains alkali. Do **not** get the substance in your eyes. Avoid prolonged or repeated contact with skin. Do **not** swallow internally. In case of contact, immediately wash skin with soap and water. In case of contact, immediately flood eyes with large amounts of water for a minimum of 15 minutes. IMMEDIATELY CALL A PHYSICIAN. KEEP OUT OF REACH OF CHILDREN.
- Naptha and Methyl Ethyl Ketone (MEK) are flammable materials and **must** be used with caution. Follow the manufacturer's instructions to provide complete safety when using these materials. KEEP OUT OF REACH OF CHILDREN.
- To avoid burns, be alert for hot parts on products that have just been turned OFF, and hot fluids in lines, tubes, and compartments.
- **Always** use tools that are in good condition. Make sure you understand how to use them before performing any service work. Use ONLY genuine Cummins or Cummins Recon® replacement parts.
- **Always** use the same fastener part number (or equivalent) when replacing fasteners. Do **not** use a fastener of lessor quality if replacements are necessary.
- Do **not** perform any repair when fatigued or after consuming alcohol or drugs that can impair your functioning.
- Some state and federal agencies in the United States of America have determined that used engine oil can be carcinogenic and can cause reproductive toxicity. Avoid inhalation of vapors, ingestion, and prolonged contact with used engine oil.

Definition of Terms

AFC	Air Fuel Control
API	American Petroleum Institute
ASA	Air Signal Attenuator
ASTM	American Society of Testing and Materials
C	Celsius
CARB	California Air Resources Board
C.I.D.	Cubic Inch Displacement
cm	Centimeter
CPL	Control Parts List
cSt	Centistokes
DCA	Diesel Coolant Additive
E.C.S.	Emission Control System
EPA	Environmental Protection Agency
F	Fahrenheit
ft-lb	Foot Pound
GVW	Gross Vehicle Weight
Hg	Mercury
HP	Horsepower
H_2O	Water
in-lb	Inch Pound
kg	Kilograms
km	Kilometers
km/l	Kilometers per Liter
kPa	Kilopascal
l	Liter
m	Meter
mm	Millimeter
MPa	Megapascal
MPH	Miles Per Hour
MPQ	Miles Per Quart
N•m	Newton-meter
OEM	Original Equipment Manufacturer
ppm	Parts Per Million
psi	Pounds Per Square Inch
RPM	Revolutions Per Minute
S.A.E.	Society of Automotive Engineers

NOTES

Section E - Engine and Component Identification

Section Contents

Page

Engine Identification E-2
Cummins Engine Nomenclature E-2
Engine Dataplate E-2
Fuel Pump Dataplate E-3

External Engine Components E-8

General Specifications E-4
Air Induction System E-6
Batteries (State of Charge) E-7
Cooling System E-6
Electrical System E-7
Exhaust System E-6
Fuel System E-7
General Engine Data E-5
Lubricating Oil System E-6

Engine Identification

Cummins Engine Nomenclature

The model name provides the following data:

N T A 855 A

- N = Four Valve Head
- T = Turbocharged
- A = Aftercooled
- 855 = Displacement (CID)
- A = Application (A = Ag; C = Construction)

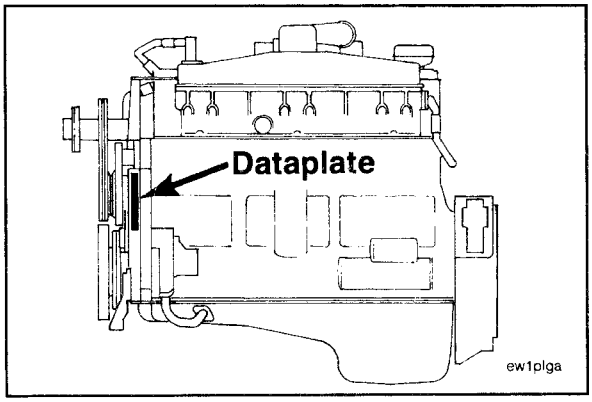

Engine Dataplate

The engine dataplate shows specific information about your engine. The engine serial number (E.S.N.) (1), Control Parts List (CPL) (2), Model (3), and Horsepower and RPM rating provide information for ordering parts and service needs.

NOTE: The engine dataplate **must not** be changed unless approved by Cummins Engine Company, Inc.

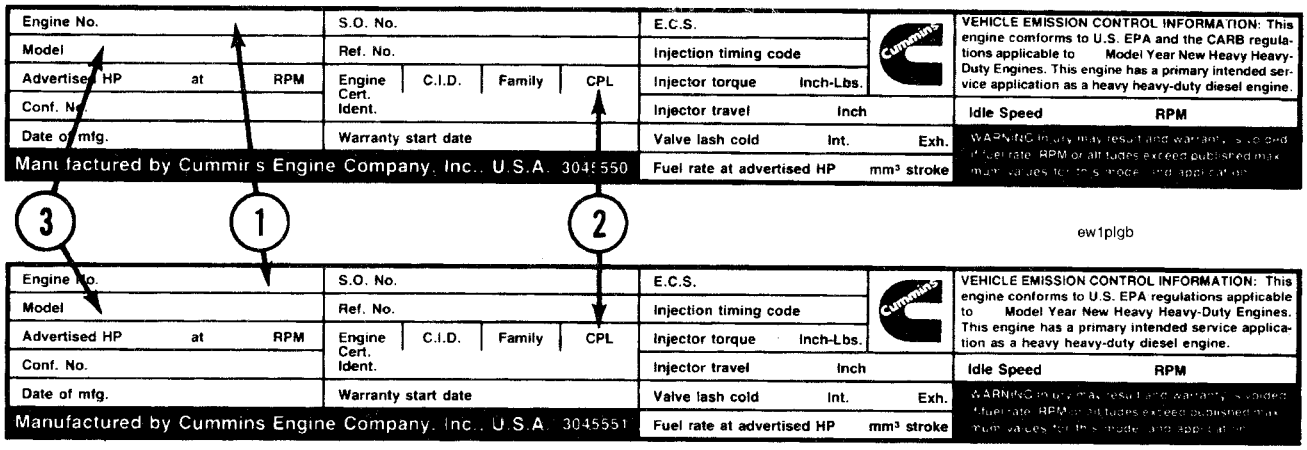

Fuel Pump Dataplate

The fuel pump dataplate is located on the top of the fuel pump. It provides information for fuel pump calibration.

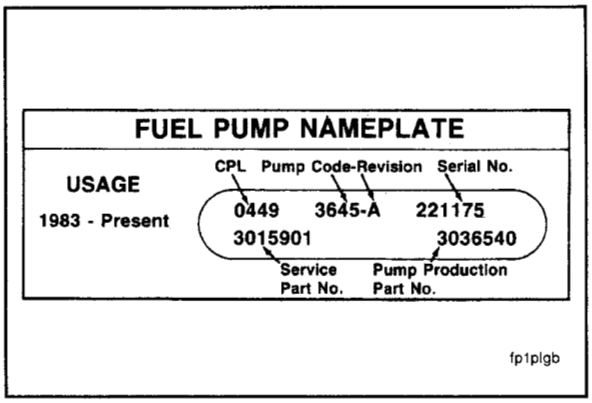

General Specifications

Metric [U.S. Customary]

NOTE: Listed below are general specifications for this engine. Refer to each System Section for additional specifications.

Engine Speed ..... Refer to the engine dataplate for optional speed rating.

Displacement ..... 14.0 liters [855 C.I.D.]

Bore and stroke ..... 140 mm [5.5 in] x 152 mm [6.0 in]

Engine Weight

- Dry ..... 1303 kg [2870 lbs] to 1330 kg [2930 lbs]
- Wet ..... 1348 kg [2970 lbs] to 1376 kg [3030 lbs]

Firing order 1-5-3-6-2-4

Valve and injector settings:

- Intake valve adjustment ..... 0.28 mm [0.011 in]
- Intake valve limits ..... 0.15 to 0.41 mm [0.006 to 0.016 in]
- Exhaust valve adjustment ..... 0.58 mm [0.023 in]
- Exhaust valve limits ..... 0.46 to 0.76 mm [0.018 to 0.030 in]
- Top Stop injector adjustment (in engine) ..... 0.6 to 0.7 N•m [5 to 6 in-lb]
- Top Stop injector recheck limits ..... 0.00 to 0.05 mm [0.000 to 0.002 in lash]
- STC Top Stop injector adjustment (in engine) ..... 0.6 to 0.7 N•m [5 to 6 in-lb]
- STC Top Stop injector recheck limits ..... 0.00 to 0.05 mm [0.000 to 0.002 in lash]

General Engine Data

Cylinder Location and Firing Order:

1-5-3-6-2-4

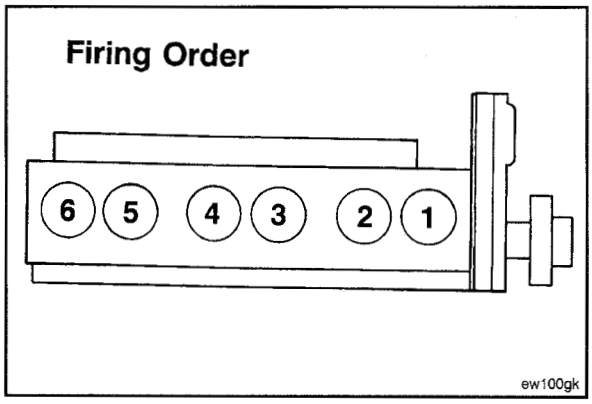

Intake and **Exhaust** Valve Locations.

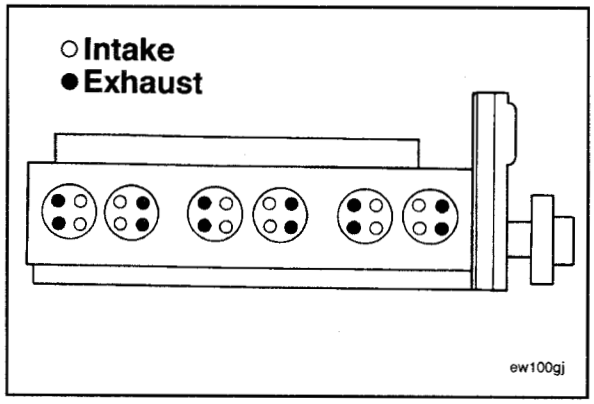

Air Induction System

Metric [U.S. Customary]

Maximum Allowable Intake Restriction:

- With Clean Filter Element ..... 380 mm-H_2O [15 in-H_2O]
- With Dirty Filter Element ..... 635 mm-H_2O [25 in-H_2O]

Lubricating Oil System

Oil pressure at idle (minimum allowable) ..... 70 kPa [10 psi] minimum

At no load governed speed ..... 240-310 kPa [35-45 psi]

Oil capacity of standard engine:

Bypass filter ..... 2.65 liters [0.7 U.S. gal.]

Full flow filter ..... 2.65 liters [0.7 U.S. gal.]

Combination filter ..... 2.65 liters [0.7 U.S. gal.]

Oil pan capacity (high-low):
G-Drive ..... 28.4 to 36 liters [7.5 to 9.5 U.S. gal.]
Other Applications ..... 26 to 34 liters [7.0 to 9.0 U.S. gal.]

Cooling System

Coolant capacity (engine only) ..... 21 liters [22 U.S. quarts]

Standard modulating thermostat range ..... 79 to 91°C [175 to 195°F]

Minimum recommended operating temperature (top tank) ..... 70°C [158°F]

Maximum recommended operating temperature (top tank) ..... 95°C [203°F]

Minimum recommended pressure cap ..... 48 kPa [7 psi]

Exhaust System

Maximum allowable back pressure imposed by piping and silencer ..... 76 mm H_20 [3 in. Hg]

Maximum bending movement to turbocharger flange ..... 27 N•m [20 ft-lb]

Exhaust pipe size ..... 127 mm [5 in.]

Fuel System

NOTE: For performance and fuel rate values, refer to the engine data sheet or the fuel pump code for the particular model involved.

Maximum Allowable Restriction to Pump (at rated power):

- With Clean Filter ..... 100 mm Hg [4 in Hg]
- With Dirty Filter ..... 200 mm Hg [8 in Hg]

Maximum Allowable Return Line Restriction Without Check Valves ..... 63 mm Hg [2.5 in Hg]

Maximum Allowable Return Line Restriction
with Check Valves and/or Overhead Tanks ..... 165 mm Hg [6.5 in Hg]

Minimum Fuel Vent Capability ..... 0.85 m^3/h [30 ft^3/hr]

Electrical System

Minimum Recommended Battery Capacity

System Voltage	Ambient Temperatures			
	-18°C [0°F]		0°C [32°F]	
	Cold Cranking Amperes	Reserve Capacity* Amperes	Cold Cranking Amperes	Reserve Capacity* Amperes
12 Volt	1800	640	1280	480
24 Volt**	900	320	640	240

* **Note:** The number of plates within a given battery size determines reserve capacity. Reserve capacity determines the length of time sustained cranking can occur.

** **Note:** CCA ratings are based on two, 12 volt batteries in series.

Batteries (State of Charge)

Battery State of Charge	Specific Gravity @ 27°C [80°F]
100%	1.260-1.280
75%	1.230-1.250
50%	1.200-1.190
25%	1.170-1.190
Discharged	1.110-1.130

External Engine Components

The illustrations which follow show the locations of the major external engine components, the filters, and other service and maintenance points. Some external components will be at different locations for different engine models. NT855 engines will **not** include an aftercooler, item No. 2 below.

1. Fan Hub
2. Aftercooler
3. Air Compressor
4. Fuel Pump
5. Starting Motor
6. Vibration Damper

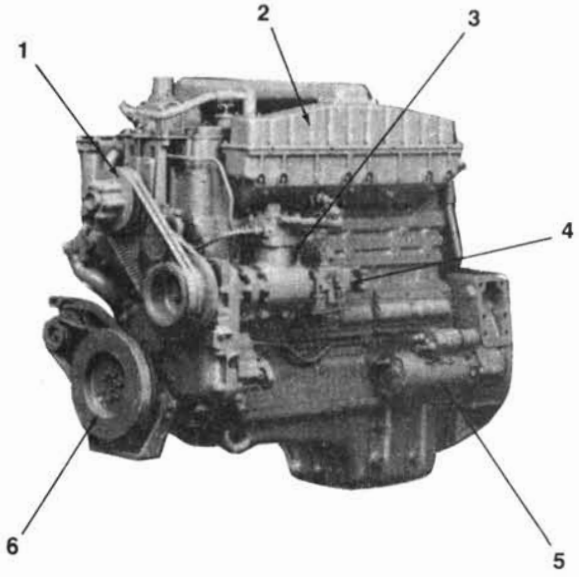

Fuel Pump Side

1. Turbocharger
2. Oil Cooler
3. Coolant Outlet
4. Thermostat Housing
5. Coolant Inlet
6. Full Flow Oil Filter
7. Bypass Oil Filter
8. Dipstick
9. Flywheel Housing

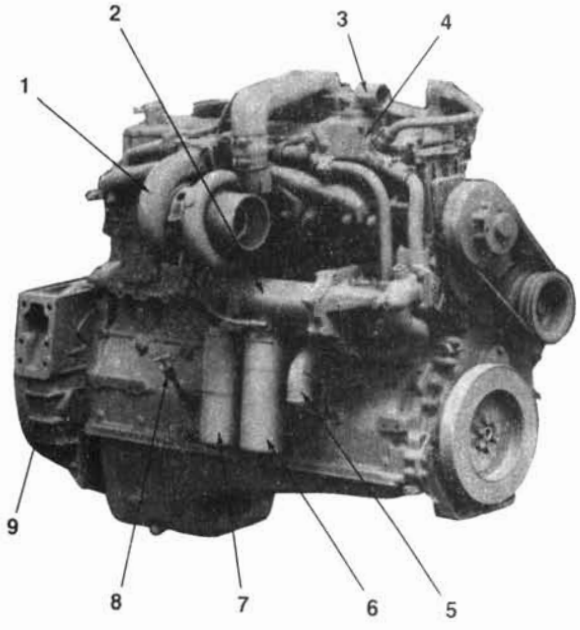

Exhaust Side

Section 1 - Operating Instructions

Section Contents

Page

Cold Weather Engine Operation 1-2

Cold Weather Protection 1-5

Cold Weather Starting Aids 1-3
Electrically Operated Ether Valve 1-4
Ether Starting Aid 1-3
Installation Recommendations 1-4
Manually Operated Ether Valve 1-3

Cold Weather Starting Procedures 1-4
With Mechanical or Electrical Metering Equipment 1-5
Without Metering Equipment 1-4

Engine Operating Range 1-6

Engine Shut-Down 1-6
Engine Operation Before Shutdown 1-6

General Information 1-2

Normal Starting Procedures (Above 0°C [32°F]) 1-2

Operating the Engine 1-5

Power Takeoff With Variable Speed Control 1-7

Starting Procedure - After Extended Shutdown or Engine Oil Change 1-5

Step Timing Control 1-7

General Information

Correct care of your engine will result in longer life, better performance, and more economical operation.

- Follow the daily maintenance checks listed in Maintenance Guidelines, Section 2.
- Check the oil pressure indicators, temperature indicators, warning lights, and other gauges daily to make sure they are operational.

Warning: DO NOT OPERATE A DIESEL ENGINE WHERE THERE ARE OR CAN BE COMBUSTIBLE VAPORS. These vapors can be sucked through the air intake system and cause engine acceleration and overspeeding which in turn can destory the engine and result in a fire, personal injury and extensive property damage. Numerous safety devices are available, such as air intake shutoff devices, to minimize the risk of overspeeding where an engine, due to its application, can operate in a combustible environment, such as due to a fuel spill or gas leak. Remember, Cummins has no way of knowing the use you have for your engine. THE EQUIPMENT OWNER AND OPERATOR ARE RESPONSIBLE FOR SAFE OPERATION IN A HOSTILE ENVIRONMENT. CONSULT YOUR CUMMINS AUTHORIZED REPAIR LOCATION FOR FURTHER INFORMATION CONCERNING PROTECTIVE DEVICES SUITABLE FOR YOUR APPLICATION.

Normal Starting Procedures (Above 0°C [32°F])

- Disengage the driven unit or, if equipped, put the transmission in neutral.
- Start the engine with the throttle in the idle position.

Caution: To prevent damage to the starting motor, do not engage the starting motor more than 30 seconds. Wait 2 minutes between each attempt to start (electrical starting motors only).

NOTE: Air type starting motors require a minimum of 480 kPa [70 psi] air pressure to function correctly.

- Engine oil pressure **must** be indicated on the gauge within 15 seconds after starting.
- When starting a cold engine, increase the engine speed (RPM) slowly to provide adequate lubrication to the bearings and to allow the oil pressure to stabilize.

NOTE: Do **not** idle the engine for excessively long periods. Long periods of idling (more than 10 minutes) can damage an engine because combustion chamber temperatures drop so low the fuel will **not** burn completely. This will cause carbon to clog the injector spray holes and piston rings, and can cause the valves to stick. If the engine coolant temperature becomes too low (60°C [140°F]), raw fuel will wash the lubricating oil off the cylinder walls and dilute the crankcase oil; therefore, all moving parts of the engine will **not** receive the correct amount of lubrication which can reduce engine life.

- Idle the engine 3 to 5 minutes at approximately 1,000 RPM before operating with a load.

Caution: When using jumper cables to start the engine, make sure to connect the cables in parallel: positive (+) to positive (+) and negative (-) to negative (-). When using an external electrical source to start the engine, turn the disconnect switch to the "OFF" position. Remove the key before attaching the jumper cables.

Cold Weather Engine Operation

Satisfactory performance of a diesel engine operating in low ambient temperature conditions requires modification of the engine, surrounding equipment, operating practices and maintenance procedures. The colder the temperatures encountered, the greater the amount of modification required and yet with the modifications applied, the engines **must** still be capable of operation in warmer climates without extensive changes. The following information is provided to engine owners, operators and maintenance personnel on how the modifications can be applied to get satisfactory performance from their diesel engines.

There are three basic objectives to be accomplished:

1. Reasonable starting characteristics followed by practical and dependable warm-up of the engine and equipment.
2. A unit or installation which is as independent as possible from external influences.
3. Modifications which maintain satisfactory operating temperatures with a minimum increase in maintenance of the equipment and accessories.

If satisfactory engine temperature is **not** maintained, higher maintenance cost will result due to the increased engine wear, poor performance and formation of excessive carbon, varnish and other deposits. Special provisions to overcome low temperatures are definitely necessary, whereas a change to warmer climate normally requires only a minimum of revision. Most of the accessories will be designed in such a way that they can be disconnected so there is little effect on the engine when they are **not** in use.

The two most commonly used terms associated with preparation of equipment for low temperature operation are **Winterization** and **Arctic Specifications**.

Winterization of the engine and/or components so starting and operation are possible in the lowest temperature to be encountered requires:

1. Use of correct materials.
2. Proper lubrication, low temperature lubricating oils.
3. Protection from the low temperature air. The metal temperature does **not** change, but the rate of heat dissipation is affected.
4. Fuel of the proper grade for the lowest temperature.
5. Heating to be provided to increase the engine block and component temperature to a minimum of -32°C [-25°F] for starting in lower temperatures.
6. Proper external heating source available.
7. Electrical equipment capable of operating in the lowest expected temperature.

Arctic specifications refer to the design material and specifications of the components necessary for satisfactory engine operation in extreme low temperatures -54°C [-65°F]. Contact Cummins Engine Company, Inc. or the equipment manufacturer to obtain the special items required.

For additional information on cold weather operation, obtain Service Bulletin No. 3379009, Engine Operation in Cold Weather, from the nearest Cummins Distributor or dealer.

Cold Weather Starting Aids

Ether Starting Aid

Warning: Starting fluid contains ether and is extremely flammable. Misuse or mishandling can cause an explosion. NEVER handle starting fluid near an open flame. NEVER use starting fluid with a preheater, glow plug, flame thrower or other type of electrical starting equipment. Do NOT breathe the fumes as serious injury to the human respiratory system will result. Fuel oil or volatile fuel cold starting aids are not to be used in underground mine or tunnel operations.

Caution: Using too much starting fluid will cause extremely high pressures and detonation in the engine cylinders, resulting in damage to the cylinder parts and bearings. Too much starting fluid can also cause damage from engine overspeed.

Manually Operated Ether Valve

The manually operated ether valve includes the valve body assembly (5), clamp (2), and nylon tube (3). The fuel cylinder (1), atomizer fitting (4) and pull control (6) **must** be ordered separately.

Standard pull or throttle control cables can be used to actuate the manual valve, if desired.

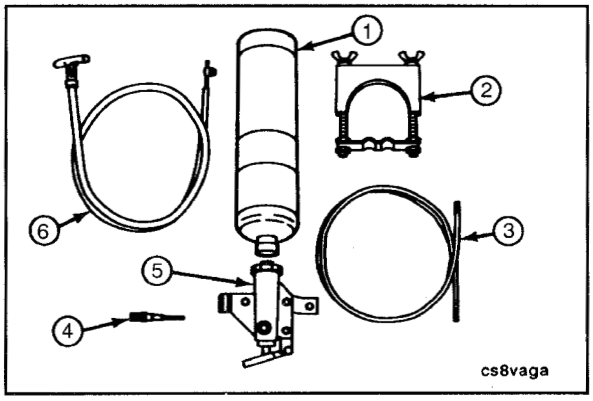

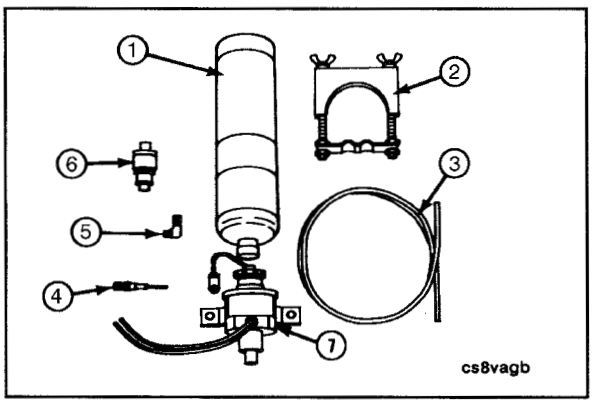

Electrically Operated Ether Valve

The electrically operated ether valve includes the valve body (7), 90 degree elbow (5), clamp (2), push button switch (6), and nylon tube (3). A thermostat is mounted on the engine exhaust manifold and cuts out the valve by sensing manifold heat when the engine is running. See the Parts Catalog for fuel cylinder (1) and fuel atomizer fittings (4). These fittings **must** be ordered separately, as required.

Installation Recommendations

The atomizer fittings **must** be mounted in the engine air intake manifold or inlet connection to provide an equal distribution of starting fuel to each cylinder. The atomizer holes are 180 degrees apart and **must** be mounted so the spray is injected the long way of the manifold. If incorrectly installed, the spray goes crosswise of the manifold.

Cold Weather Starting Procedures

Without Metering Equipment

Warning: Cummins Engine Company, Inc. does not recommend the use of unmetered starting fluid. Uncontrolled use of starting fluid will cause engine damage.

Warning: Do not use starting fluid near an open flame or with a preheater or flame thrower equipment. This combination can cause an explosion.

Warning: Do not breathe starting fluid fumes. Starting fluid fumes can be harmful to your health.

Caution: Do not use excessive amounts of starting fluid when starting an engine. The use of too much starting fluid will cause engine damage.

Warning: Do not use volatile cold starting aids in underground mine or tunnel operations due to the potential of an explosion. Check with the local U.S. Bureau of Mines Inspector for instructions.

Use of starting fluid without metering equipment is **not** a recommended policy of Cummins Engine Company, Inc. If it is necessary to use this method:

- Set the throttle at idle.
- Disengage the driven unit or make sure the gears are in neutral.
- Open the manual fuel shut-down valve, or electric shut-down valve, whichever is used.
- Engage the starter and while cranking the engine, spray starting fluid into the intake of the air cleaner for 2 seconds. The starting fluid vapors will be drawn into the air intake manifold and the engine can start.
- If the engine begins to stop, spray the fluid into the intake of the air cleaner for 1 second. **Never** apply a continuous spray to keep the engine running or engine damage will result. Wait at least 10 seconds between one spray sequence and the next.

With Mechanical or Electrical Metering Equipment

- Set the throttle at idle.
- Disengage the driven unit or, if equipped, put the transmission in neutral.
- Activate the switch to open the fuel pump shutoff valve.
- While cranking the engine, push the electric button or pull the cable to inject measured amounts of fluid into the engine.

If the engine begins to stop, activate the push button or cable again.

Cold Weather Protection

NOTE: Anti-leak antifreezes are **not** recommended for use in Cummins engines. Although these antifreezes are chemically compatible with DCA water treatment, the anti-leak agents can clog the coolant filters and render them ineffective.

For cold weather operation, use of permanent type antifreeze with rust inhibitor additives is recommended.

If antifreeze is **not** used and the ambient temperature is at or below the freezing point 0°C [32°F], the entire cooling system **must be drained when the engine is not** to be operated. Drain the cylinder block and heads on all engines by opening the petcocks and removing the drain plugs. If an air compressor, heat exchange or other water cooled accessory is used, open the petcock and drain. Failure to properly drain the engine and accessories can cause serious damage during freezing weather.

Immersion type water and oil heaters are available for engines used in cold weather operations and to maintain temperatures to permit the engine to operate at full load at start-up.

Starting Procedure - After Extended Shutdown or Engine Oil Change

Complete the following steps after each oil change or after the engine has been shut off for more than 3 days to make sure the engine receives the correct oil flow through the lubricating system:

- Disconnect the electrical wire from the fuel pump solenoid valve.
- Rotate the crankshaft by the starting motor until oil pressure appears on the gauge or the warning light goes out.
- Connect the electrical wire to the fuel pump solenoid valve.
- Start the engine. (Refer to Normal Starting Procedures).

Operating the Engine

- Do **not** operate the engine at full throttle below peak torque engine speed (RPM) for extended periods (more than 30 seconds) of time.
- Allow the engine to idle 3 to 5 minutes before shutting it off after a full load operation. This allows adequate cool down of pistons, cylinder liners, bearings, and turbocharger components.
- Monitor the oil pressure and coolant temperature gauges frequently. Refer to Lubricating Oil System or Cooling System, Section V, for recommended operating pressures and temperatures. Shut off the engine if any pressure or temperature does **not** meet the specifications.

Caution: Continuous operation with low coolant temperature (below 60°C [140°F]) or high coolant temperature (above 100°C [212°F]) can damage the engine.

- If an overheating condition starts to occur, reduce the power output of the engine by releasing the throttle pressure or shifting the transmission to a lower gear, or both, until the temperature returns to normal operating range. If the engine temperature does **not** return to normal, shut off the engine and refer to Troubleshooting, Section T, or contact a Cummins Authorized Repair Location.
- Most failures give an early warning. Look and listen for changes in performances, sound, or engine appearance that can indicate service or engine repair is needed. Some changes to look for are as follows:
  - — Engine misfires
  - — Excessive vibration
  - — Unusual engine noises
  - — Fuel, oil, or coolant leaks
  - — Sudden changes in engine operating temperature or pressure
  - — Excessive smoke
  - — Loss of power
  - — An increase in oil consumption
  - — An increase in fuel consumption

Engine Operating Range

Caution: Operating the engine beyond high idle speed can cause severe engine damage. The engine speed must not exceed 2450 RPM under any circumstances. When descending a steep grade, use a combination of transmission gears and engine or service brakes to control the vehicle and engine speed.

Cummins heavy-duty engines are designed to operate successfully at full throttle under transient conditions down to peak torque engine speed (RPM). This is consistent with recommended operating practices for good fuel economy.

Excessive full throttle operation below peak torque RPM will shorten engine life to overhaul, can cause serious engine damage, and is considered engine abuse. Peak torque RPM varies from 1,100 RPM to 1,500 RPM, depending upon rated engine speed.

Operation of the engine below peak torque RPM can occur during gear shifting due to the difference of ratios between transmission gears, but engine operation **must not** be sustained (more than 30 seconds) at full throttle below peak torque RPM.

Engine Shut-Down

Engine Operation Before Shutdown

It is important to idle the engine 3 to 5 minutes before shutting it down to allow the lubricating oil and water to carry heat away from the combustion chamber, bearings, shafts, etc. This is especially important with turbocharged engines.

The turbocharger contains bearings and seals that are subject to the high heat of combustion exhaust gases. While the engine is running, this heat is carried away by oil circulation; but if the engine is stopped suddenly, the turbocharger temperature can rise as much as 38°C [100°F]. The results of the extreme heat can be seized bearings or loose oil seals.

NOTE: Do **not** idle for excessively long periods.

Long periods of idling are **not** good for an engine because the combustion chamber temperatures drop so low the fuel can **not** burn completely. This will cause carbon to clog the injector spray holes and piston rings and can result in stuck valves.

If the engine coolant temperature becomes too low, raw fuel will wash the lubricating oil off the cylinder walls and dilute the crankcase oil so all moving parts of the engine will suffer from poor lubrication.

If the engine is **not** being used, shut it down.

The engine can be shut down completely by turning off the switch on installations equipped with an electric shut-down valve, or by turning the manual shut-down valve knob. Turning off the switch which controls the electric shut-down valve stops the engine unless the override button on the shut-down valve has been locked in the open position. If the manual override on the electric shut-down valve is being used, turn the button fully **counterclockwise** to stop the engine. Refer to Normal Starting Procedure. The valve can **not** be reopened by the switch until after the engine comes to a complete stop, unless a rapid restart valve is installed.

Caution: Do not leave the switch key or the override button in the valve open or in the run position when the engine is not running. With overhead tanks this can allow fuel to drain into the cylinders, causing a hydraulic lock. Therefore, stop the engine immediately in the event of any malfunction or part failure.

Practically all failures give some warning to the operator before the parts fail and ruin the engine. Many engines are saved because alert operators heed warning signs (sudden drop in oil pressure, unusual noises, etc.) and immediately shut down the engine.

Power Takeoff With Variable Speed Control

The variable speed governor on power takeoff applications is used to control engine speed at the desired RPM.

To engage the variable speed governor with the engine idling on standard throttle:

- Put the variable speed control lever in the low idle position.
- Lock the standard throttle lever in the full open position.
- Put the variable speed control lever in the operating position desired.

To return to standard throttle operation:

- Return the standard throttle lever to the idle position.
- Lock the variable speed control lever in the maximum speed position.

Step Timing Control

Some engine models are equipped with step timing control (STC). STC allows the engine to operate in advanced injection timing during start-up and light duty engine load conditions and to return to normal timing during medium and high engine load conditions.

Caution: Do not attempt to bypass or otherwise tamper with the STC oil control valve or plumbing. This will result in the loss of both fuel economy and engine durability. Correct valve operation is necessary to maintain acceptable cylinder pressures and temperatures and to yield optimal fuel economy during high-load operation and to control white smoke at idle.

Benefits include:

- Improved cold weather idling characteristics
- Reduced cold weather white smoke.
- Improved light load fuel economy.
- Reduced injector carboning.

When operating in the advanced mode, a light ticking noise can be noted at the top of the engine. This sound is normal and is caused by the actuation of the STC hydraulic tappets during each injection cycle.

For optimal white smoke control on STC equipped engines, do **not** increase engine speed above idle during engine start-up until sufficient oil pressure reaches the STC tappets to shift all injectors into the advanced timing mode.

NOTES

Section 2 - Maintenance Guidelines

Section Contents

Page

Engine Maintenance Schedule 2-3
Page References for Maintenance Instructions 2-4
General Information 2-2
Tool Requirements 2-2

General Information

Cummins Engine Company, Inc. recommends that the engine be maintained according to the Maintenance Schedule on page 2-3.

If the engine is operating in ambient temperatures consistently below -18°C [0°F] or above 38°C [100°F], perform maintenance at shorter intervals. Shorter maintenance intervals are also required if the engine is operated in a dusty environment or if frequent stops are made. See your Cummins Authorized Repair Location for recommended intervals.

NOTE: Some of these maintenance procedures require special tools or **must** be done by qualified personnel. These procedures are outlined in the specific manuals as follows:

Procedure	Bulletin No.	Description
• Adjust the Valves and Injectors	3379076-05 3810298	NTA855 Shop Manual NT855 Troubleshooting & Repair Manual
• Clean and Calibrate the Injectors	3379071	Injector PT Rebuild Manual
• Clean and Calibrate the Injectors	3810313	PT (Type D) STC Injector Shop Manual
• Clean and Calibrate the Fuel Pump	3379084	Fuel Pump (PT Type G) Rebuild and Calibrate
• Repair and Rebuild Components*	3379076-05	NTA855 Shop Manual

*If your engine is equipped with a component or an accessory **not** manufactured by Cummins Engine Company, Inc., refer to the component manufacturer's maintenance recommendations. A listing of suppliers' addresses and telephone numbers is provided in Component Manufacturers, Section C.

Use the chart provided on page 2-6 as a convenient way to keep a record of maintenance performed.

Tool Requirements

Most of the maintenance operations described in this manual can be performed with common hand tools (S.A.E. wrenches, sockets, and screwdrivers).

The following is a list of special service tools required for some maintenance operations:

Tool Part No.	Description
3375049	Oil Filter Wrench
3376592	5 to 6 Inch Pound Torque Wrench
3376807	Water/Fuel Filter Wrench
3822524	Belt Tension Gauge (Click-Type)
3822525	Belt Tension Gauge (Click-Type)
3823348	Top Stop Tappet Setting Tool (STC equipped engines only)
ST-1293	Belt Tension Gauge (v-belts)

Refer to the appropriate sections for a description of the tools and how to use them.

Contact your nearest Cummins Authorized Repair Location for the required service tools.

Engine Maintenance Schedule

Maintenance Schedule

Equipment No. _____ Engine Serial No. _____
Mechanic _____ Hours, Calendar _____
Time Spent _____ Check Performed _____
Parts Order No. _____ Date _____

NTA855 Engines

Check each operation as performed.

Daily (Section 3)	Weekly (Section 4)	250 Hours or 6 Mos. (1) (Section 5)	1500 Hours or 1 Year (Section 6)	Annual (Section 7)	6000 Hours or 2 Years (Section 8)	Other (Section 9)
	Repeat Daily Check	**Repeat (Daily/ Weekly)**	**Repeat Previous Intervals**	**Repeat Previous Intervals**	**Repeat Previous Intervals**	
☐ Check operator's report ☐ Check engine: • Oil Level • Coolant level If make-up coolant is required, DCA4 concentration **must** be checked. ☐ Visually inspect engine for damage, leaks, loose or frayed belts and listen for unusual noises ☐ Visually inspect fan ☐ Drain water/ sediment from fuel tanks, fuel filters, and fuel/water separator ☐ Check/Clean air cleaner precleaner and dust pan	☐ Check air cleaner: • Check piping, hoses, and clamps • Check restriction indicator • Clean/ change air cleaner element ☐ Drain air tanks ☐ Check water inlet screens (marine only)	☐ Change engine oil ☐ Change filters • Oil full flow • Oil by-pass • Fuel filter • Water filter ☐ Clean/change • Crankcase breather • Air compressor air filter ☐ Check coolant additive (DCA4) concentration (all applications) (2).	☐ Adjust crossheads, valves and injectors	☐ Replace hoses as required ☐ Check cold start thermal aids ☐ Check batteries ☐ Steam clean engine ☐ Tighten mounting bolts ☐ Check crankshaft end clearance ☐ Check heat exchanger zinc plugs annually or as required (marine only) ☐ Check turbocharger mounting nuts	☐ Inspect the following assemblies: • Turbocharger • Vibration damper • Air compressor (Cummins/ Holset) • Fan hub • Idler pulley assembly • Water pump ☐ Clean and flush cooling system **6000 Hours or 3 Years** ☐ **Clean and calibrate injectors and fuel pump**	☐ + Alternator ☐ + Generator ☐ + Starter ☐ + Air compressor (Non-Cummins) ☐ + Electrical connections ☐ + Batteries ☐ + Freon compressor ☐ + Hydraulic governor + On these components follow the manufacturer's recommended maintenance procedure

(1) For standby generator sets, perform maintenance at 250 hours or 1 year.

(2) Check coolant additive concentration every 6 months unless the concentration is over 3.0 units. Then, check at every oil drain interval until concentration is below 3.0 units.

Note: Under circumstances where hours of operation are not accumulated at a fast rate, use calendar time. In other words, use hours, or calendar time, whichever comes first.

***Cummins Engine Company, Inc., recommends the use of dry type air cleaners.**

Page References for Maintenance Instructions

For your convenience, listed below are the page numbers that contain specific instructions for performing the maintenance checks listed in the maintenance schedule.

Section

Daily 3

- Air Cleaner Precleaner and Dust Pan - Checking/Cleaning 3-5
- Engine Operation Report 3-2
- Cooling Fan - Inspection 3-4
- Coolant Level - Checking 3-3
- Belts - Inspection 3-4
- Belt Tension - Checking 3-5
- Fuel-Water Separator - Drain 3-3
- Oil Level - Checking 3-3
- Unusual Engine Noise - Checking 3-2

Weekly 4

- Air Cleaner Element - Cleaning/Checking 4-2
- Air Intake Hoses, Pipes, and Clamps - Inspection 4-6
- Drain Air Tanks 4-6
- Inlet Air Restriction Indicators - Mechanical/Vacuum 4-2
- Raw Water Inlet Screens (Marine Only) - Checking 4-6

Every 250 Hours or 6 Months 5
(Every 250 hours or 1 year for Standby Generator Sets)

- Air Compressor Air Cleaner Element 5-10
  Replacement - Bendix-Westinghouse Paper Element 5-10
  Replacement - Bendix-Westinghouse Sponge Element 5-10
  Replacement - (Cummins Two Cylinder Only) 5-10
- Coolant Filter - Replacement 5-7
- Crankcase Breather - Cleaning or Changing 5-6
- Fuel Filter - Replacement 5-2
- Lubricating Oil and Oil Filter- Changing/Replacement 5-3
- Coolant Additive Concentration (Every 6 Months for All Applications) 5-9

Every 1500 Hours or One Year 6

- Crossheads, Valves, and Injectors - Adjustment 6-2

Annually 7

- Batteries - Checking 7-4
- Crankshaft End Clearance - Checking 7-3
- Heat Exchanger Zinc Plugs (Marine Only) - Checking 7-4
- Hoses - Checking/Replacement 7-2
- Engine Mounting Bolts - Checking/Tightening 7-3
- Steam Clean Engine 7-2
- Thermal Aids - Checking 7-2
- Turbocharger Mounting Nuts - Inspection 7-5

Every 6000 Hours or Two Years 8

- Air Compressor - Inspection 8-19
- Cooling System - Coolant - Changing 8-14
- Fan Hub (Belt Driven) - Inspection 8-17
- Idler Pulley Assembly - Inspection 8-18
- Turbocharger - Inspection 8-18
- Vibration Damper - Inspection 8-22
- Water Pump - Inspection 8-18

Every 6000 Hours or Three Years

- Fuel Pump - Cleaning/Calibration/Removal/Installation 8-2
- Injectors - Cleaning and Calibration/Checking/Installation/Removal 8-5

• **Other** **9**
• • + Air Compressor 9-2
• + Alternator 9-2
• + Batteries 9-2
• + Electrical Connections 9-2
• + Freon Compressor 9-2
• + Generator 9-2
• + Hydraulic Governor 9-2
• + Starting Motor 9-2
• + Follow the manufacturer's recommended maintenance procedures on these components.

Maintenance Record

Engine Serial No. _____ Engine Model _____

Owner's Name _____ Equipment Name/Number _____

Date	Km [Miles], Hours or Time Interval	Actual Km [Miles] or Hours	Maintenance Check Performed	Check Performed By	Comments

Section 3 - Daily Maintenance Procedures

Section Contents

Page

Air Cleaner Pre-Cleaner and Dust Pan 3-5
Checking/Cleaning 3-5

Belt Tension 3-5
Checking 3-5

Belts 3-4
Inspection 3-4

Coolant Level 3-3
Checking 3-3

Cooling Fan 3-4
Inspection 3-4

Engine Operation Report 3-2

Fuel-Water Separator 3-3
Drain 3-3

General Information 3-2

Oil Level 3-3
Checking 3-3

Unusual Engine Noise 3-2
Checking 3-2

General Information

Preventative maintenance begins with day-to-day awareness of the condition of the engine and its systems.

Before starting the engine, check the oil and coolant levels. Look for:

- Leaks
- Loose or damaged parts
- Worn or damaged belts
- Any change in engine appearance

Engine Operation Report

The engine **must** be maintained in top mechanical condition if the operator is to get optimum satisfaction from its use. The maintenance department needs daily running reports from the operator to make necessary adjustments in the time allotted and to make provisions for more extensive maintenance work as the reports indicate the necessity.

Comparison and intelligent interpretation of the daily report along with a practical follow-up action will eliminate most failures and emergency repairs.

Report to the maintenance department any of the following conditions:

- Low lubricating oil pressure
- Low power
- Abnormal water or oil temperature
- Unusual engine noise
- Excessive smoke
- Excessive use of coolant, fuel or lubricating oil
- Any fuel, coolant or lubricating oil leaks.

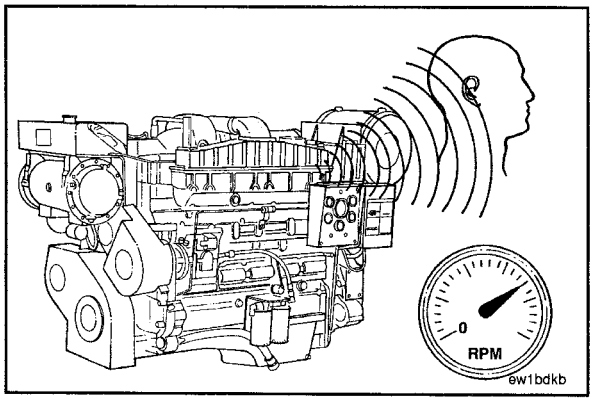

Unusual Engine Noise

Checking

During the daily maintenance check, listen for any unusual engine noise which can indicate that service is required.

Fuel-Water Separator

Drain

NOTE: The water and sediment may contain petroleum products. Please consult the local environmental agency for recommended disposal guidelines.

Cummins requires that a fuel-water separator or fuel filter and water separator be installed in the fuel supply system. Drain the water and sediment from the separator daily.

Shut off the engine. Use your hand to open the drain valve. Turn the valve **counterclockwise** until draining occurs and the valve drops at least one inch out of the filter. Drain the filter sump of water until clear fuel is visible.

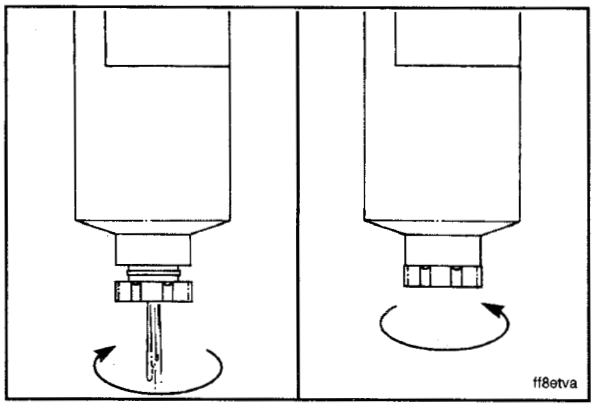

Caution: Do not overtighten the valve. Overtightening can damage the threads.

Turn the valve **clockwise** to close the drain valve.

Oil Level

Checking

Check the oil level daily.

Never operate the engine with the oil level below the "L" (Low) mark or above the "H" (High) mark. Wait at least 5 minutes after shutting off the engine to check the oil. This allows time for the oil to drain to the oil pan.

NOTE: The vehicle **must** be level when checking the oil level to make sure the measurement is correct.

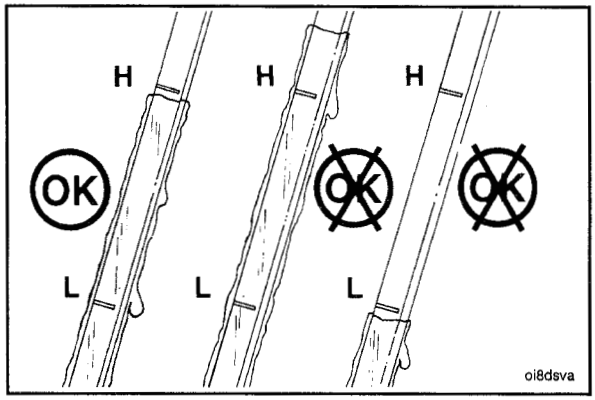

Coolant Level

Checking

Warning: Do not remove the radiator cap from a hot engine. Wait until the temperature is below 50°C [120°F] before removing the pressure cap. Failure to do so can result in personal injury from heated coolant spray or steam. Remove the filler cap slowly to relieve coolant system pressure.

Never use a sealing additive to stop leaks in the coolant system. This can result in coolant system plugging and inadequate coolant flow causing the engine to overheat.

The coolant level **must** be checked daily.

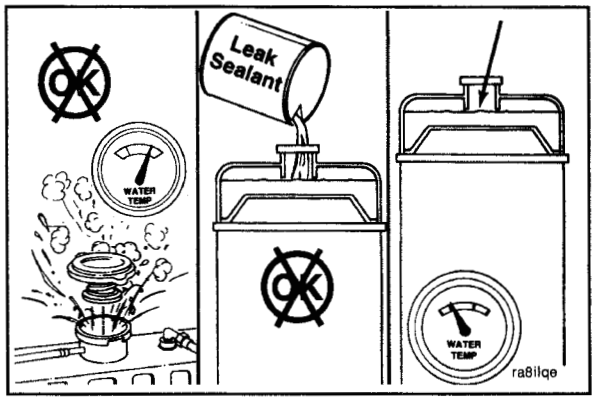

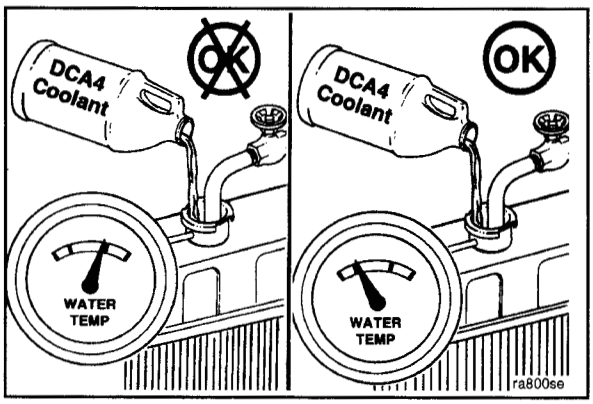

Caution: Do not add cold coolant to a hot engine. Engine castings can be damaged. Allow the engine to cool to below 50°C [120°F] before adding coolant.

Makeup coolant added to the engine **must** be mixed with the correct proportions of antifreeze, DCA, and water to avoid engine damage.

Refer to Coolant Recommendations/Specifications in Section V for details on proper mixing of coolant.

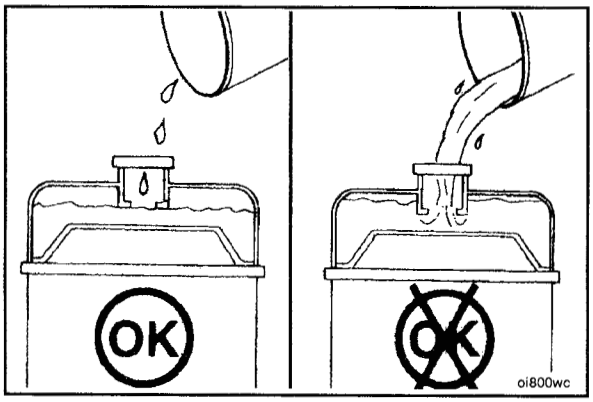

Fill the cooling system with coolant to the bottom of the fill neck in the radiator fill or expansion tank.

NOTE: Some radiators have two fill necks, both of which **must** be filled when the cooling system is drained.

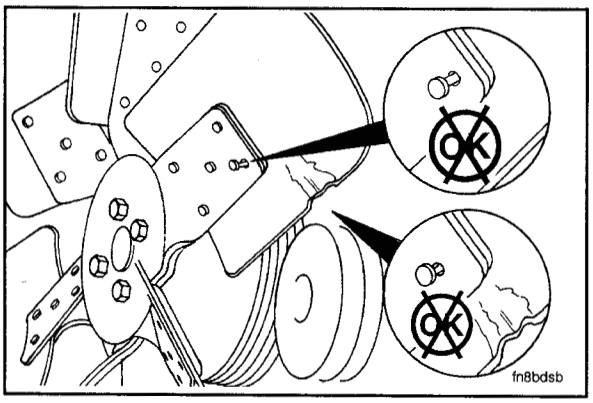

Cooling Fan

Inspection

Warning: Personal injury can result from a fan blade failure. Never pull or pry on the fan. This can damage the fan blade(s) and cause fan failure.

NOTE: Manually rotate the crankshaft by using a wrench on the accessory drive pulley nut.

A visual inspection of the cooling fan is required daily. Check for cracks, loose rivets, bent or loose blades, and for contact between the fan blade tips and the fan shroud. Check the fan to make sure it is securely mounted. Tighten the capscrews if necessary. Replace any fan that is damaged.

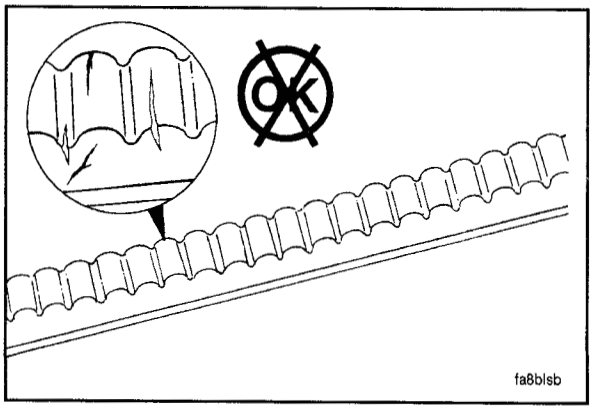

Belts

Inspection

Visually inspect the belts daily. Replace the belts that are cracked or frayed. Adjust belts that have a glazed or shiny surface which indicates belt slippage. Correctly installed and tensioned belts will show even pulley and belt wear.

Belt damage can be caused by:

- Incorrect tension
- Incorrect size or length
- Pulley misalignment
- Incorrect installation
- Severe operating environment
- Oil or grease on the belts

Belt Tension

Checking

Measure the belt tension in the center span of the pulleys.

Refer to the Drive Belt Tension Chart, Section V, for the correct gauge and tension value for the belt width used.

An alternate method (deflection method) can be used to check belt tension by applying 110 N [25 lbf] force between the pulleys on v-belts. If the deflection is more than one (1) belt thickness per foot of pulley center distance, the belt tension **must** be adjusted.

Refer to Section A for adjustment procedures.

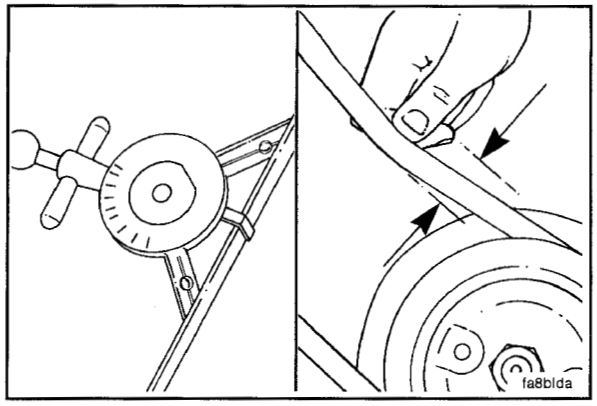

For cogged belts, make sure the belt tension gauge is positioned so that the center tensioning leg is placed directly over the high point (hump) of a cog. Other positioning will result in incorrect measurement.

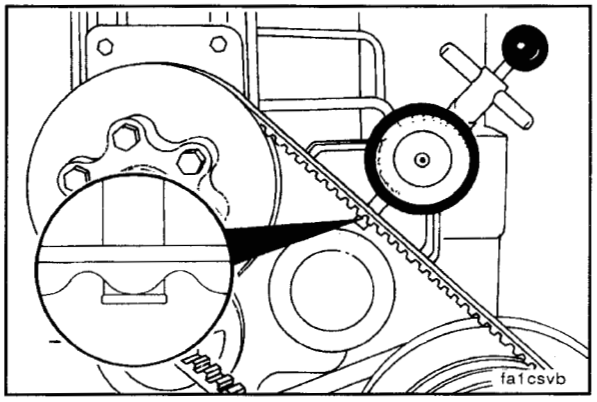

Air Cleaner Pre-Cleaner and Dust Pan

Checking/Cleaning

Under extremely dirty conditions an air pre-cleaner can be used. Clean the pre-cleaner jar and dry-type air cleaner dust pans daily or more often, as necessary, depending on operating conditions.

NOTES

Section 4 - Weekly Maintenance Procedures

Section Contents

Page

Air Cleaner Element 4-2
Cartridge Type Element - Cleaning 4-5
Cleaning 4-2
Dual - Heavy Duty Dry-Type Element - Replacement 4-4
Replacement 4-3
Single - Heavy Duty Dry-Type Element 4-3

Air Intake Hoses, Pipes, and Clamps 4-6
Inspection 4-6

Air Tanks 4-6
Draining 4-6

General Information 4-2

Inlet Air Restriction Indicators 4-2
Mechanical Indicator 4-2
Vacuum Indicator 4-2

Raw Water Inlet Screens (Marine Only) 4-6
Checking 4-6

General Information

All checks or inspections listed under the daily maintenance interval **must** also be performed at this time in addition to those listed under this maintenance interval.

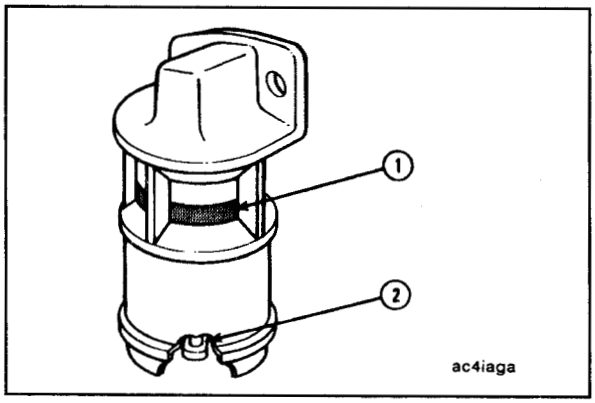

Inlet Air Restriction Indicators

Mechanical Indicator

A mechanical restriction indicator is available to indicate excessive air restriction through a dry-type air cleaner. This instrument can be mounted in the air cleaner outlet or on the vehicle instrument panel. The red flag (1) in the window gradually rises as the cartridge loads with dirt. After changing or replacing the cartridge, reset the indicator by pushing the reset button (2).

NOTE: Never remove the felt washer from the indicator. The felt washer absorbs moisture.

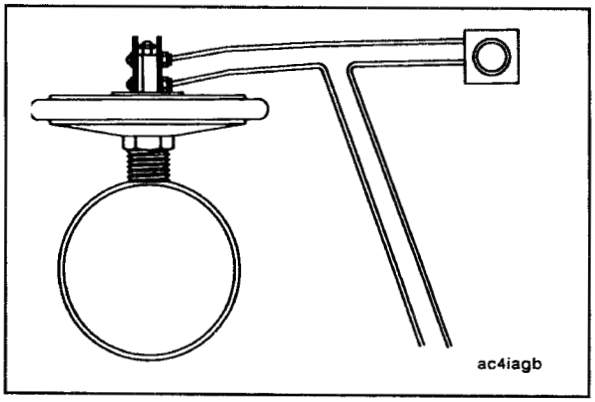

Vacuum Indicator

Vacuum switches actuate a warning light on the instrument panel when the air restriction becomes excessive.

Air restriction on turbocharged engines **must not** exceed 635 mm [25 inches H_20] or 46 mm [1.8 inches] of mercury under full power conditions.

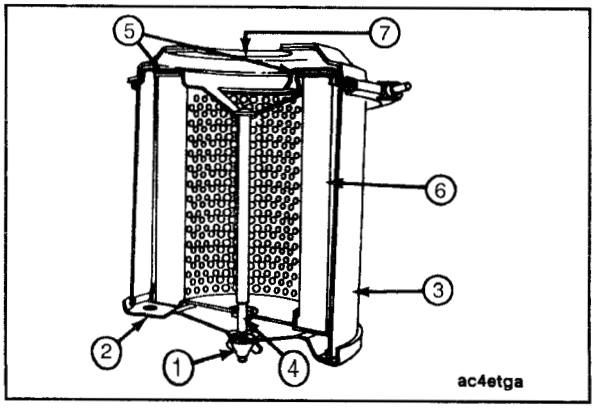

Air Cleaner Element

NOTE: The illustrations in this section show typical parts. The particular engine parts can vary.

Cleaning

The paper element (6) in a dry-type air cleaner can be cleaned several times by using compressed air to remove the dirt, approximately 207 kPa [30 psi]. Do **not** hold the air jet too close to the paper element when cleaning.

Elements that have been cleaned several times will finally clog and air flow to the engine will be restricted. After cleaning, check the restriction as previously described. Replace the element if necessary.

Caution: Holes, loose end seals, dented sealing surfaces and other forms of damage render the cleaner inoperative and require immediate element replacement.

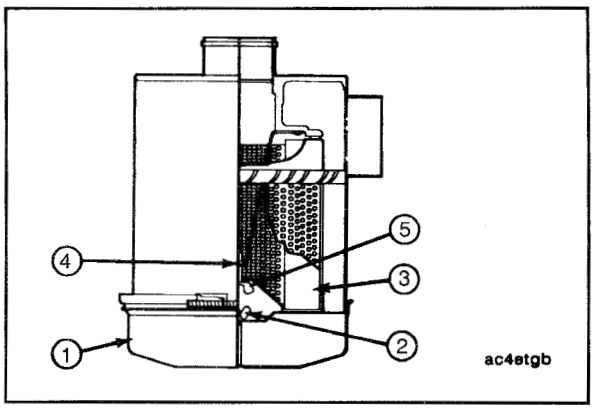

Replacement

Remove the wing nut (1) that secures the bottom cover (2) to the cleaner housing (3). Remove the cover.

Pull the element (6) down from the center bolt (4).

Caution: Pull the cover and the element straight out when removing them from the housing to avoid damage to the element.

Remove the gasket (5) from the outlet end (7) of the housing.

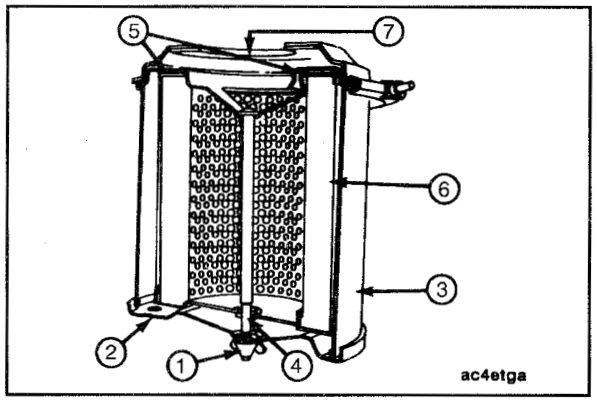

Single - Heavy Duty Dry-Type Element

Heavy duty air cleaners (single and dual types) combine centrifugal cleaning with element filtering before air enters the engines.

Before disassembly, wipe dirt from the cover and the upper portion of the air cleaner. To clean the single types:

Loosen the wing bolt, and remove the band securing the dust pan (1).

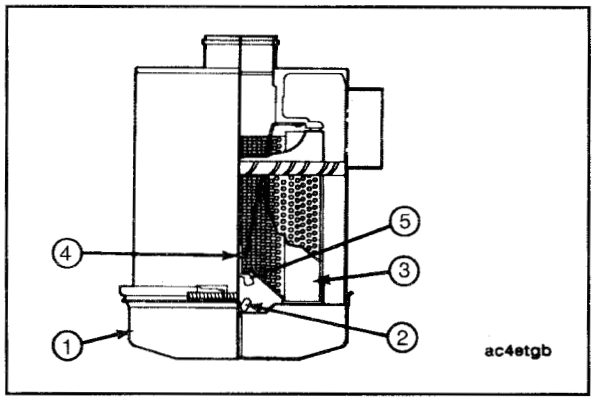

Loosen the wing nut (2). Remove the dust shield (3) from the dust pan (1). Clean the dust pan and shield.

Remove the wing nut (5) and secure the air cleaner primary element in the air cleaner housing. Inspect the rubber sealing washer on the wing nut (4).

Clean the element from the clean air side with compressed air **not** exceeding 207 kPa [30 psi]. Inspect the element after cleaning. Install the cleaned primary element or a new element.

Make sure the gasket washer is in place under the wing nut before tightening.

Assemble the dust shield and dust pan again. Position them to the air cleaner housing and secure with the band.

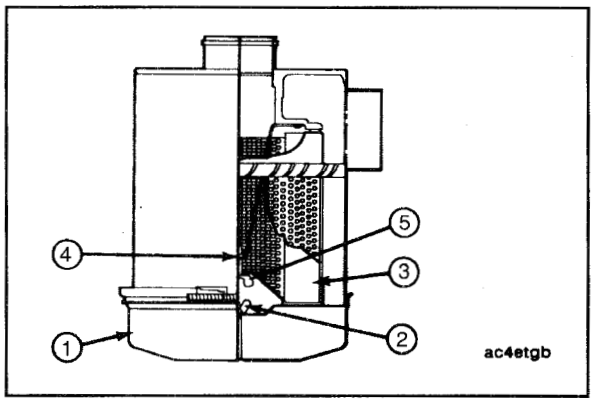

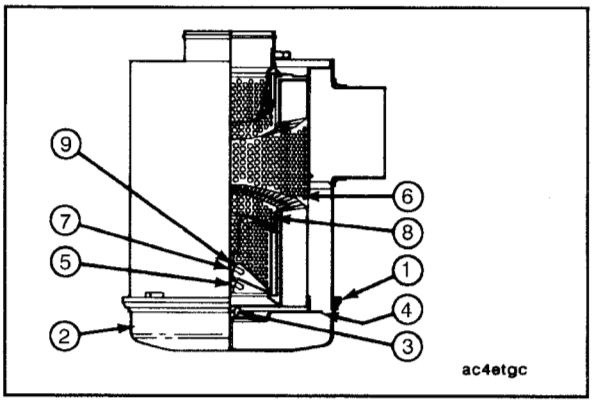

Dual - Heavy Duty Dry-Type Element - Replacement

Heavy duty air cleaners (single and dual types) combine centrifugal cleaning with element filtering before air enters the engines.

Before disassembly, wipe dirt from the cover and the upper portion of the air cleaner. To clean the dual types:

Loosen the wing bolt (1), and remove the band securing the dust pan (2).

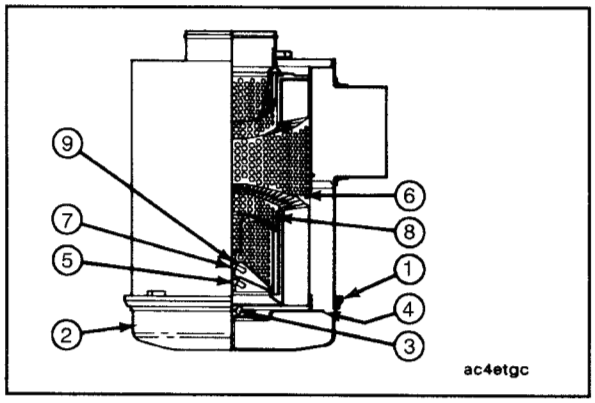

Loosen the wing nut (3). Remove the dust shield (4) from the dust pan (2). Clean the dust pan and shield.

Remove the wing nut (5) and secure the air cleaner primary element (6) in the air cleaner housing. Inspect the rubber sealing washer on the wing nut (9).

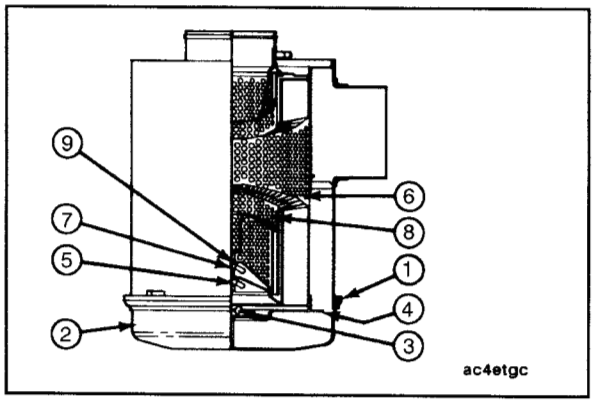

Clean the element from the clean air side with compressed air **not** exceeding 207 kPa [30 psi]. Inspect the element after cleaning. Install the cleaned primary element or a new element.

Make sure the gasket washer is in place under the wing nut before tightening.

Assemble the dust shield and dust pan again. Position them to the air cleaner housing and secure with the band.

On the dual element type Cyclopac cleaner:

Check the air restriction indicator. If the air restriction is excessive, disassemble the air cleaner, remove the wing nut (7) and replace the safety element (8).

Assemble the air cleaner as described above.

Cartridge Type Element - Cleaning

Loosen the wing nuts (4) on the air cleaner housing (5) to remove the pre-cleaner panel with the dust bin (6). To remove the pre-cleaner panel (2) equipped with an exhaust aspirator, loosen the U bolt clamp securing the pre-cleaner to the aspirator tubing.

Remove the dirty Pamic cartridge (3), by inserting your fingers in the cartridge opening (loosen all four corners of the cartridge, one at a time) and pulling it straight out.

With the larger cartridge, it can be necessary to break the seal along the edges of the cartridge. After the seal has been broken, pull the cartridge straight out and slightly up so the cartridge will clear the sealing frame and edges of the air cleaner housing.

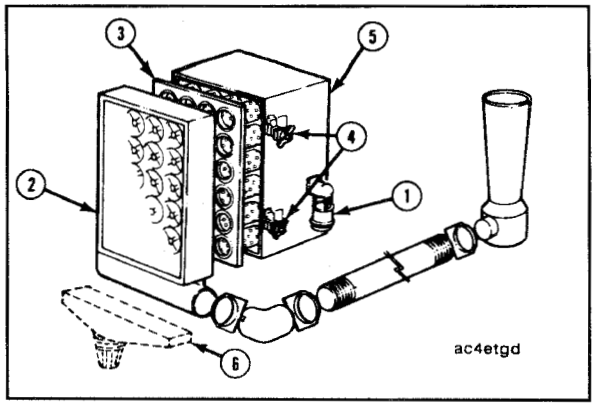

Cleaning and Inspection

Clean the pre-cleaner openings (2) of all soot, oil film and any other objects that can become lodged in the openings. Remove any dust or dirt in the lower portion of the pre-cleaner and aspirator tubing. Inspect the inside of the air cleaner housing for foreign material.

Inspect the dirty cartridge for soot or oil. If there is soot inside the Pamic tubes, check for leaks in the engine exhaust system, exhaust blow-back into the air intake and exhaust from other equipment. If the cartridge appears oily, check for fumes escaping from the crankcase breather. Excessive oil mist shortens the life of any dry-type cartridge. Troubleshooting at this point can appreciably lengthen new cartridge life.

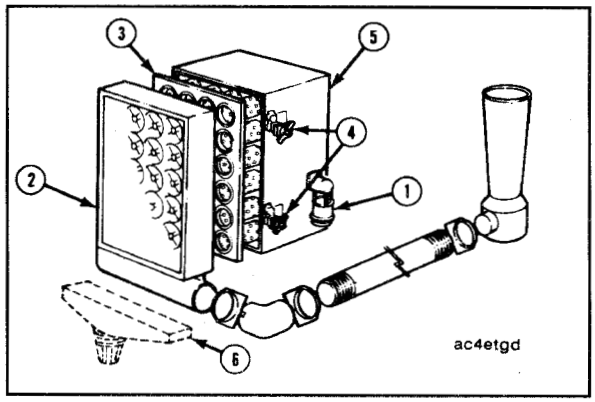

It is **not** recommended to clean and reuse the cartridge. When returned to service, life expectancy of a cleaned cartridge will be only a fraction of the original service life.

Inspect clamps and flexible hose or tubing to make sure all fittings are air tight on cleaners with exhaust aspirators.

The pre-cleaner dust (6) bin is self-cleaning.

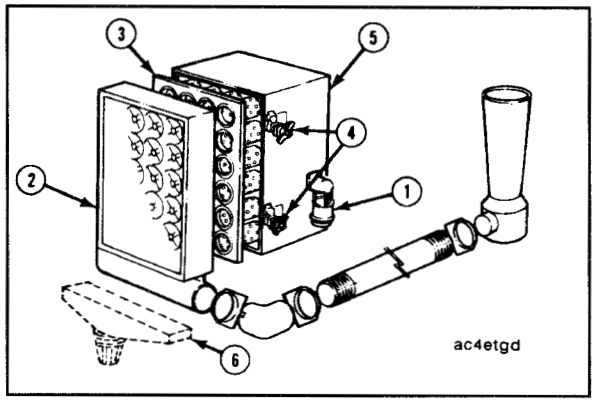

Assembly

Inspect the new filter cartridge for shipping damage before installing.

To install a new cartridge, hold the cartridge (3) in the same manner as when removing it from the housing. Insert the clean cartridge into the housing, avoiding hitting the cartridge tubes against the sealing flange on the edges of the air cleaner housing.

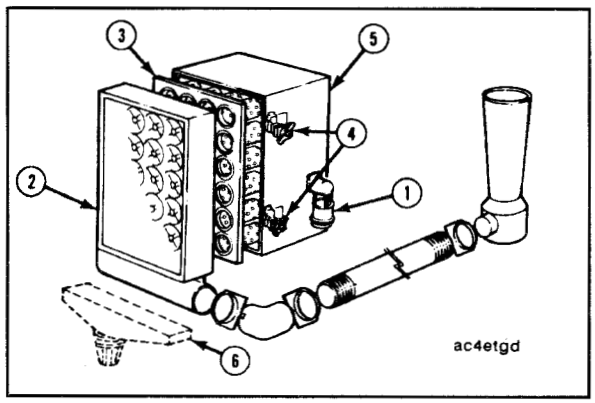

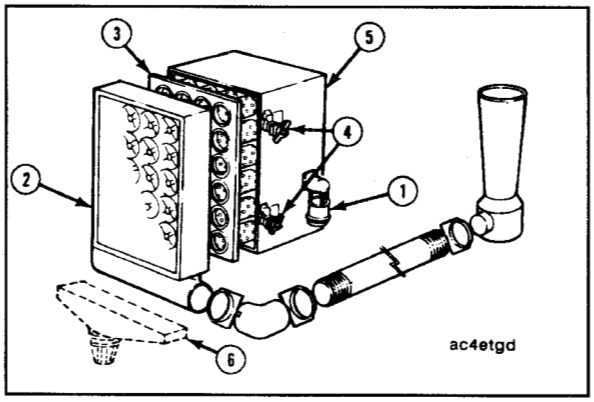

As the cleaner requires no separate gaskets for seals, care **must** be taken when inserting the cartridge to insure a proper seat within the cleaner housing. Firmly press all edges and corners of the cartridge with your fingers to effect a positive air seal against the sealing flange of the housing. The cartridge **must not** be pounded or pressed in the center to seal.

Replace the pre-cleaner panel (2) and tighten the wing nuts (4) by hand. For final tightness turn the wing nuts 1 to 1 1/2 turns with a small adjustable wrench. Do **not** tighten too much. On a pre-cleaner with an exhaust aspirator, assemble the aspirator tube to the pre-cleaner panel and tighten the U bolt.

Care **must** be taken to keep the cleaner face unobstructed.

Reset the mechanical inlet air restriction indicator.

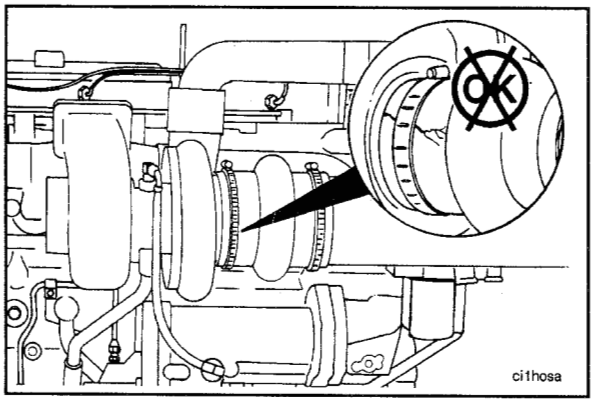

Air Intake Hoses, Pipes, and Clamps

Inspection

Inspect the intake piping for cracked hoses, loose clamps, or punctures which can damage the engine.

Tighten or replace parts as necessary to make sure the air intake system does **not** leak.

Torque Value: 8 N•m [72 in-lb]

Check for corrosion of the intake system piping under the clamps and hoses. Corrosion can allow corrosive products and dirt to enter the intake system. Disassemble and clean as required.

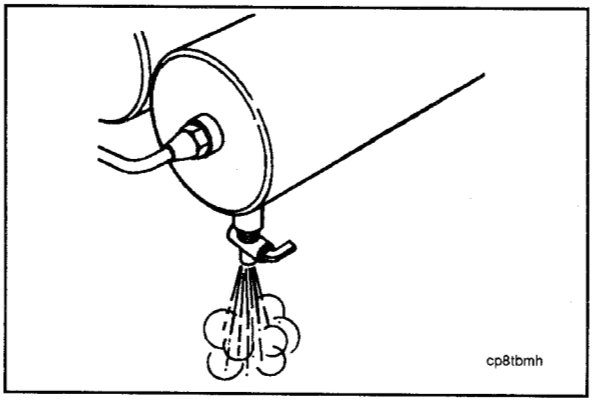

Air Tanks

Draining

Drain the moisture from the air system wet tank weekly.

Raw Water Inlet Screens (Marine Only)

Checking

Weekly check and clean the marine raw water inlet screens.

Replace as required.

Section 5 - Maintenance Procedures Every 250 Hours or 6 Months

Section Contents

Page

Air Compressor Air Cleaner Element (Cummins Two-Cylinder Only) 5-10
Replacement 5-10
Replacement - Bendix-Westinghouse Paper Element 5-10
Replacement - Bendix-Westinghouse Sponge Element 5-10

Coolant Additive Concentration 5-9
Checking 5-9

Coolant Filter 5-7
Replacement 5-7

Crankcase Breather 5-6
Cleaning and Checking 5-6

Fuel Filter(s) 5-2
Replacement 5-2

General Information 5-2

Lubricating Oil and Oil Filter 5-3
Changing 5-3
Lubricating Oil Filter Specifications 5-3

General Information

All checks or inspections listed under the previous maintenance intervals **must** also be performed at this time in addition to those listed under this maintenance interval.

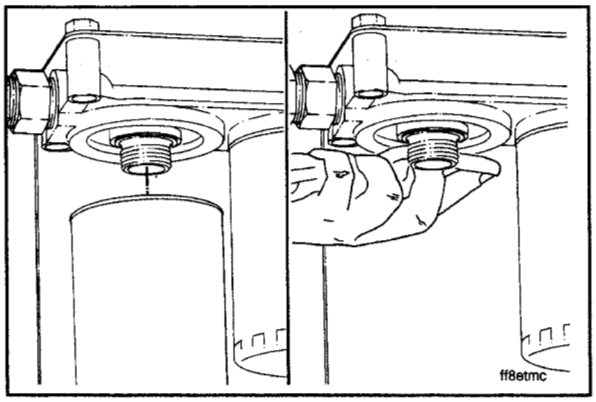

Fuel Filter(s)

Replacement

Every 250 hours or 6 months (whichever occurs first), replace the fuel filter(s). Clean the area around the fuel filter head. Remove the fuel filter. Clean the gasket surface of the filter head.

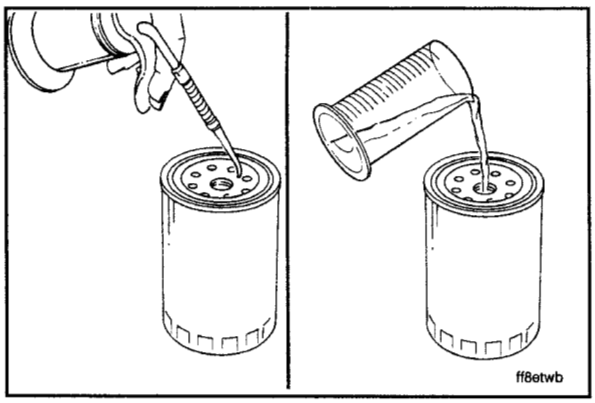

Use the correct filter(s) for your engine. Cummins requires that a fuel-water separator or a fuel filter and water separator be installed in the fuel supply system.

Standard Filter(s)

Cummins Part No. 3315844
Fleetguard® Part No. FF-105

Superfilter (Fuel-Water Separator)

Cummins Part No. 3315843
Fleetguard® Part No. FS-1212

Use clean oil to lubricate the filter seal. **Fill the new filter(s) with clean fuel.**

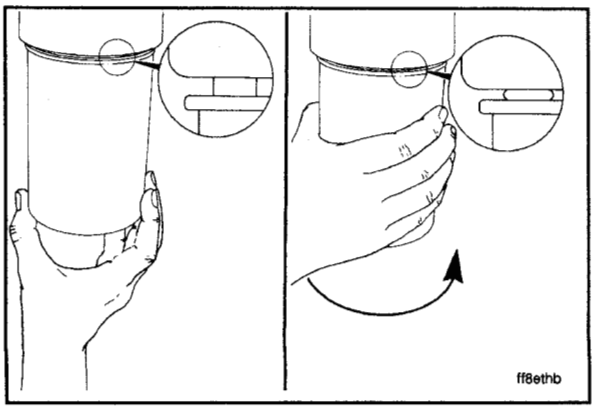

Caution: Mechanical overtightening can distort the threads or damage the filter element seal.

Install the filter as specified by the filter manufacturer.

Lubricating Oil and Oil Filter

Changing

Warning: Some state and federal agencies in the United States of America have determined that used engine oil can be carcinogenic and can cause reproductive toxicity. Avoid inhalation of vapors, ingestion, and prolonged contact with used engine oil.

Caution: Avoid direct contact of hot oil with your skin. Hot oil can cause personal injury.

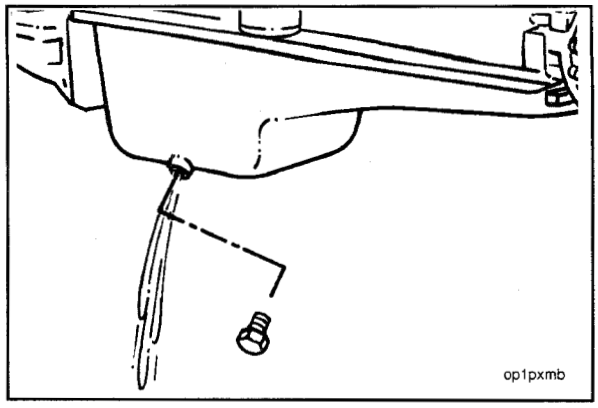

Change the lubricating oil and oil filters at every oil change interval.

Operate the engine until the water temperature reaches 60°C [140°F]. Shut off the engine. Remove the oil drain plug. Drain the oil immediately to make sure all the oil and suspended contaminates are removed from the engine.

Lubricating Oil Filter Specifications

Cummins Engine Company, Inc. requires a lubricating oil filter(s) be used that meets the specifications given in the table below.

Lubricating Oil Filter Specifications

Per Cummins Source Approval Method (SAM)	Combo (LF3000) 10,634	Full Flow (LF670) 10,509	Bypass (LF777) 10,547
Flow vs. Restriction			
• Pressure differential at 40 GPM maximum	21 kPa [3 psi]	21 kPa [3 psi]	N/A
Element Collapse			
• Pressure differential	1034 kPa [150 psi]	1034 kPa [150 psi]	1034 kPa [150 psi]
Partical Retention			
• Absolute retention, percent of 40 micrometre and above, minimum	N/A	100%	N/A
• Percent retention of 20 to 30 micrometre	N/A	95%	N/A
Hydrostatic Pressure			
• Pressure, minimum	1724 kPa [250 psi]	1724 kPa [250 psi]	1724 kPa [250 psi]

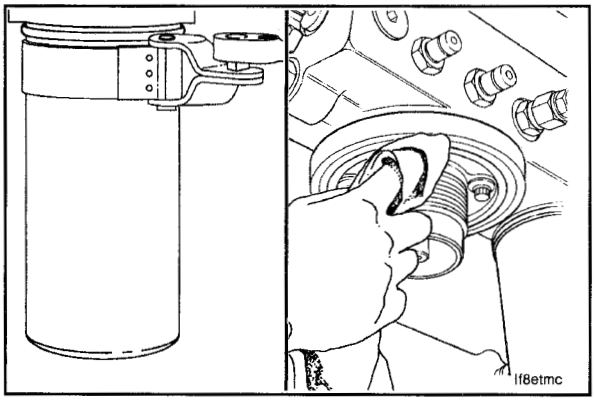

Clean the area around the lubricating oil filter head. Remove the filter. Clean the gasket surface of the filter head.

NOTE: The o-ring can stick on the filter head. Make sure the o-ring is removed.

NOTE: Refer to the Lubricating Oil Filter Specifications Chart on page 5-3.

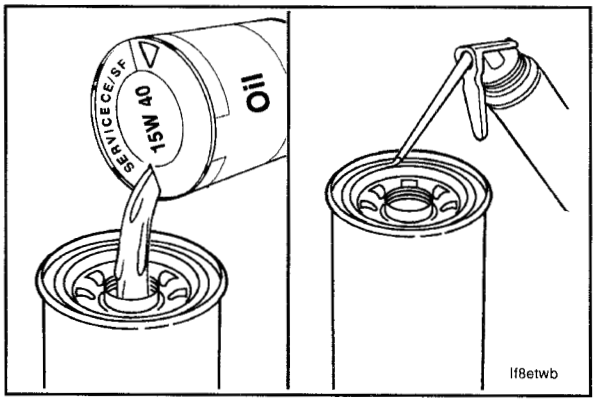

Caution: Fill the oil filter with clean lubricating oil before installing it on the engine. The lack of engine lubrication while the filter is being pumped full of oil is harmful to the engine.

Use the correct oil filter for your engine.

Combination Full Flow/Bypass Lube Filter

Cummins Part No. 3318853
Fleetguard® Part No. LF-3000

Apply a light film of lubricating oil to the gasket sealing surface **before** installing the new filter.

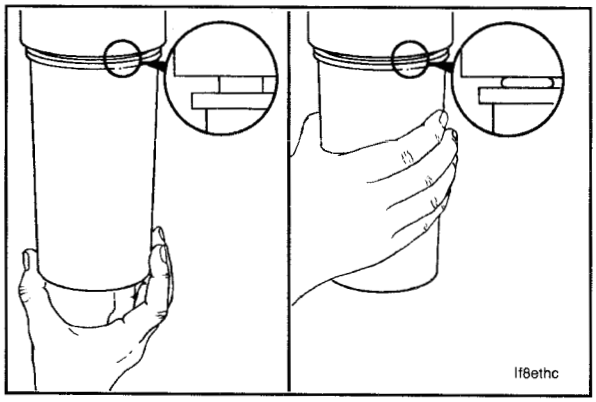

Caution: Mechanical overtightening can distort the threads or damage the filter element seal.

Install the filter as specified by the filter manufacturer.

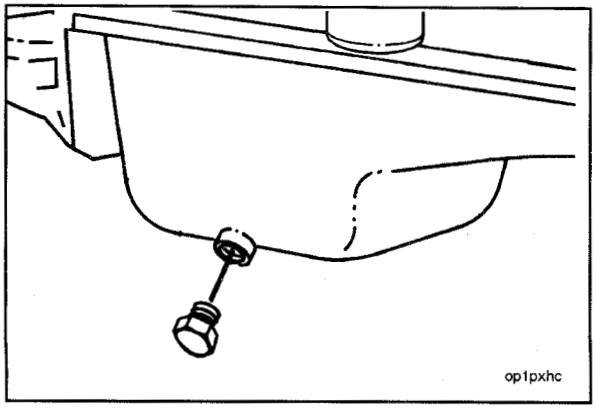

Clean and check the oil drain plug threads and the seal surface.

Install and tighten the oil drain plug.

Torque Value: 88 N•m [65 ft-lb]

Use a high quality CE or CF-4 15W-40 multi-viscosity oil such as Cummins Premium Blue or its equivalent in Cummins engines. Choose the correct oil for your operating climate as outlined in Section V.

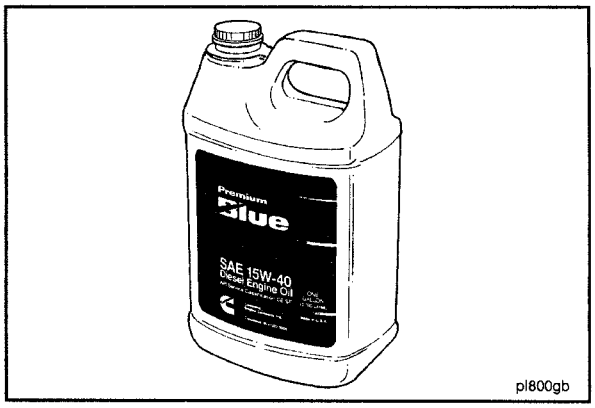

Fill the engine with clean oil to the correct level. Total system capacity including filter is listed in Section V.

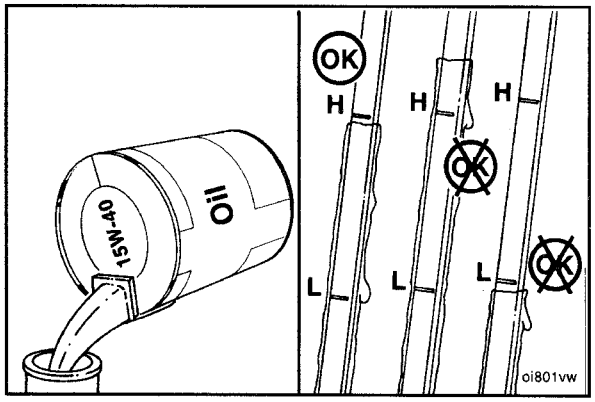

Operate the engine at idle speed to inspect for leaks at the oil filter and the drain plug.

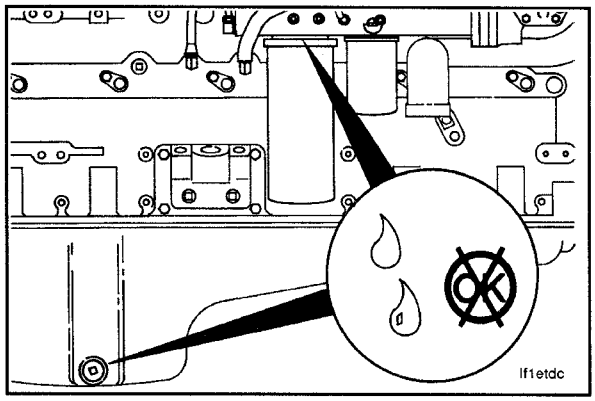

Shut off the engine. Wait approximately 5 minutes to let the oil drain from the upper parts of the engine. Check the oil level again.

Add oil as necessary to bring the oil level to the "H" (high) mark on the dipstick.

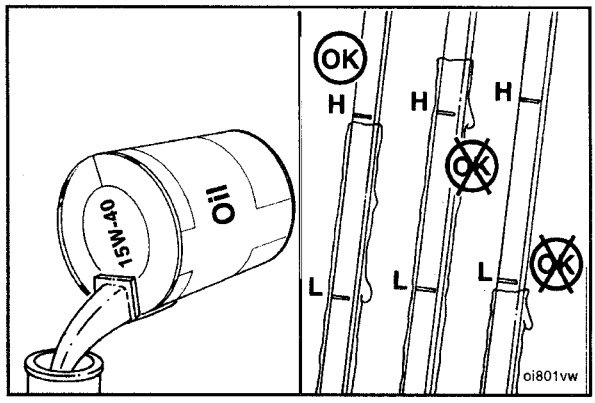

Crankcase Breather

Every 250 hours or 6 months, clean and check the crankcase breathers and breather tube.

The tube is to be removed and checked internally for obstructions or sludge buildup.

If the tube is blocked, it is to be cleaned to prevent excess crankcase pressure buildup.

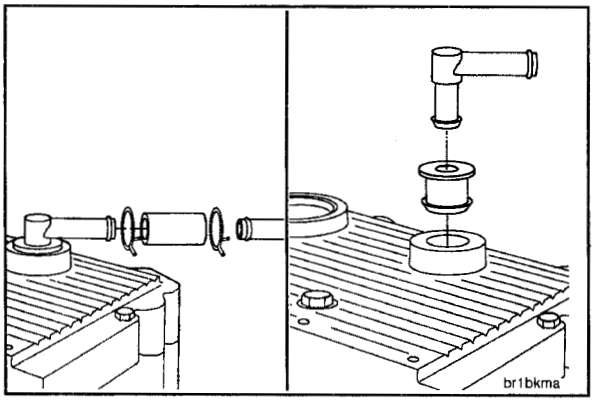

Cleaning and Checking

Loosen the hose clamp at the breather vent tube.

Remove the tube support bracket and capscrew.

Disassemble the breather as shown.

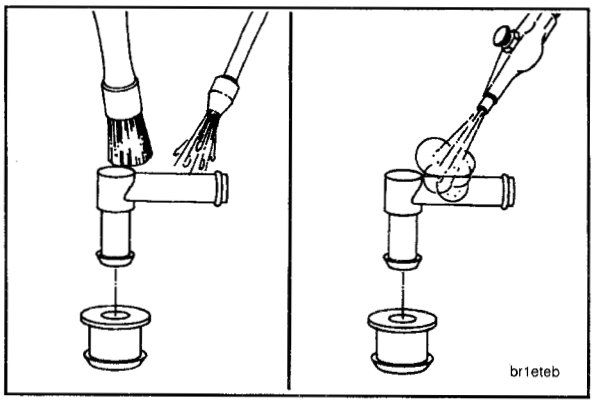

Use solvent to clean the breather. Dry it with compressed air.

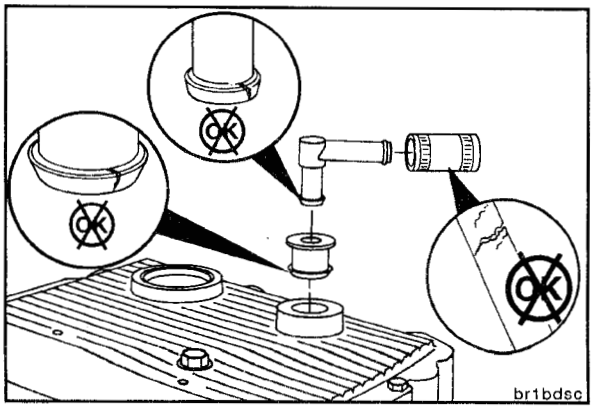

Inspect the breather tube, connector hose, and the rubber gasket for cracks or other damage. Replace if necessary.

Use solvent to clean the inside of the crankcase breather tube and dry with compressed air.

Use air pressure to blow through the vent tube.

Replace the vent tube if it is clogged.

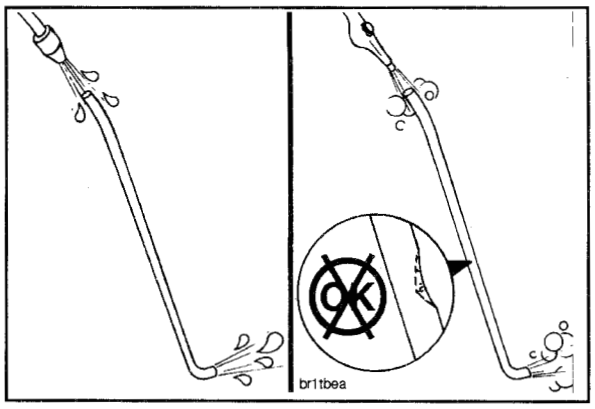

Assemble the breather as shown.

Install the vent tube, the hose, the hose clamps, the brackets, and the capscrews on the engine.

Tighten the bracket capscrew (not shown).

Torque Value: 45 N•m [35 ft-lb]

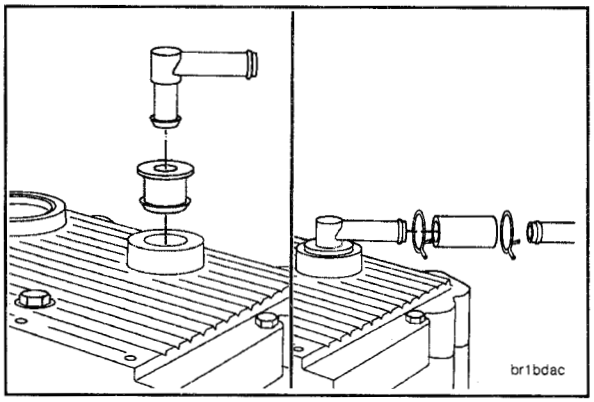

Coolant Filter

Replacement

Change the coolant filter at every oil and filter change interval.

The correct coolant filter to be used is determined by the total cooling system capacity and the oil drain interval.

Refer to the Coolant Recommendations/Specifications in Section V for the correct filter selection and test procedures.

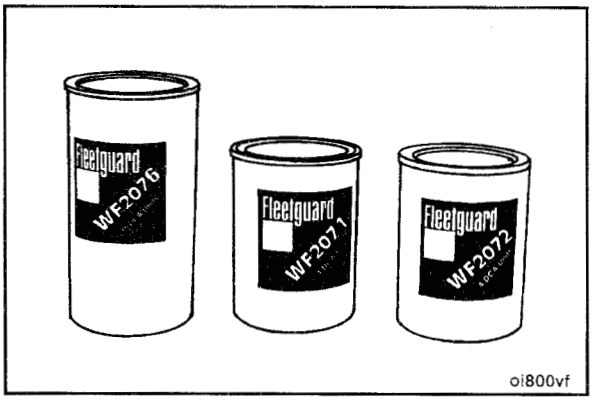

A manual shutoff valve is provided to prevent coolant leakage while changing the coolant filter.

With the valve in the vertical position, the coolant flows to and from the coolant filter. In the horizontal position, the coolant flow is cut off to and from the coolant filter.

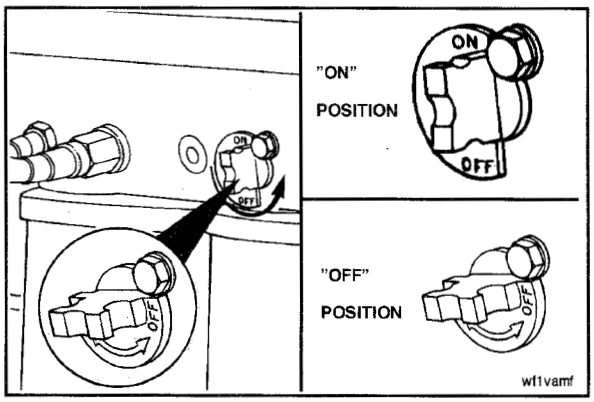

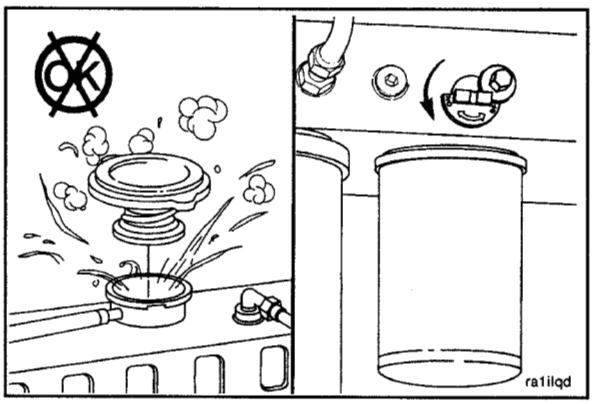

Warning: Do not remove the radiator cap from a hot engine. Hot steam will cause serious personal injury. Remove the coolant system pressure cap and close the coolant filter head shutoff valve before removing the coolant filter. Failure to do so can result in personal injury from heated coolant spray.

Turn the coolant shutoff valve to the "OFF" position.

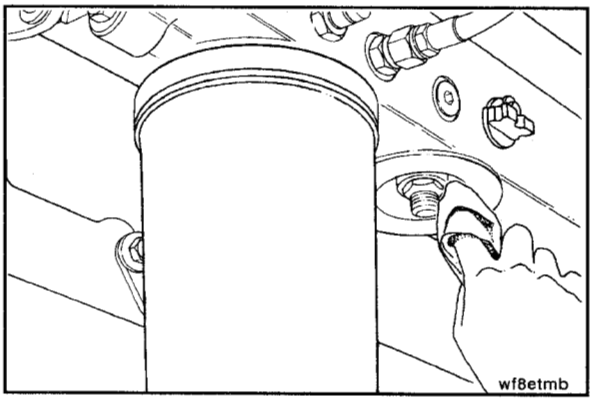

Remove and discard the coolant filter. Clean the gasket surface.

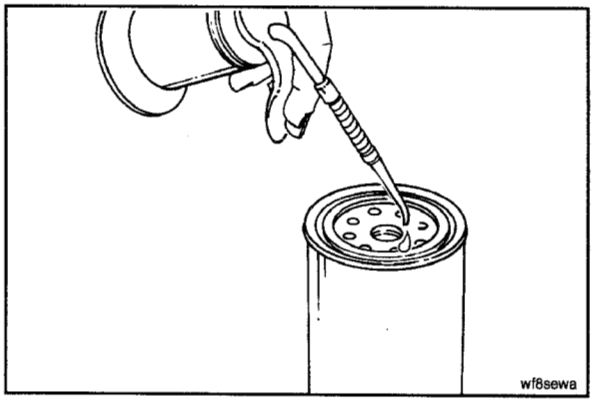

Apply a light film of lubricating oil to the gasket sealing surface before installing the new coolant filter.

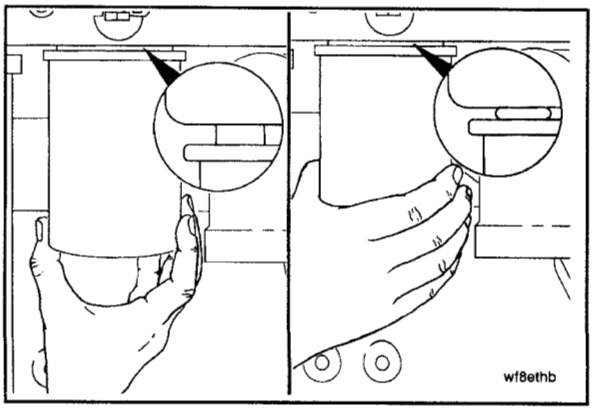

Caution: Mechanical overtightening can distort the threads or damage the filter head.

Install the filter as specified by the filter manufacturer.

Open the shut-off valve and install the coolant system pressure cap.

Caution: Engine damage will result if the valve is left closed.

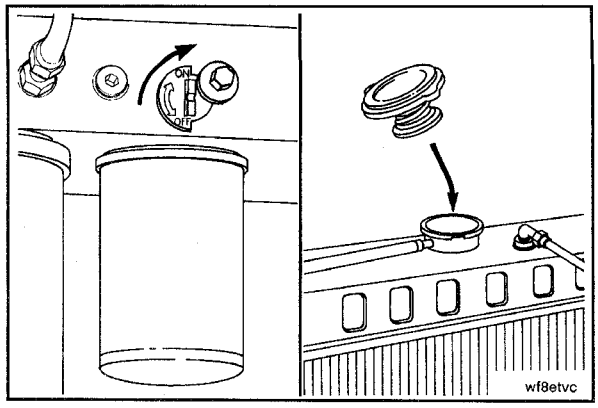

Operate the engine, and check for coolant leaks.

After the air has been purged from the system, check the coolant level again.

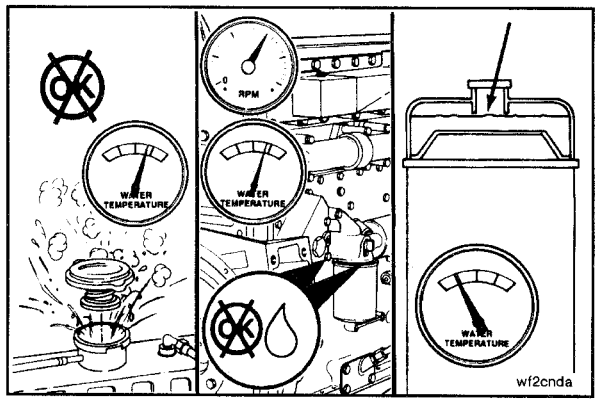

Coolant Additive Concentration

Checking

Warning: Check the coolant level only when the engine is stopped. Wait until the coolant temperature is below 50°C [120°F] before removing the pressure cap. Failure to do so can cause personal injury from heated coolant spray.

Operate the engine, and check for coolant leaks.

After the air has been purged from the system, check the coolant level again.

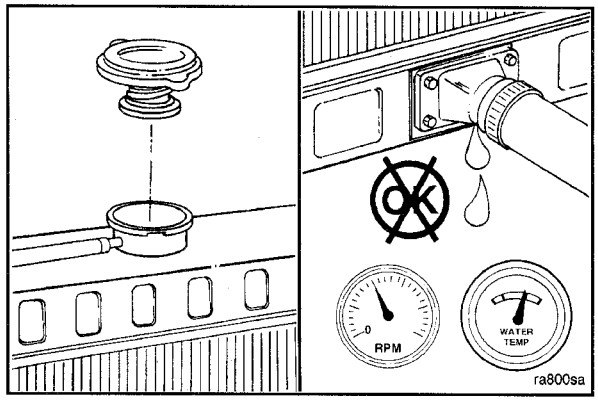

Check the DCA4 concentration level

- at least every 6 months,
- at every subsequent oil drain interval if the concentration is above 3.0 units, and
- whenever coolant is added to the cooling system between filter changes.

Use Fleetguard® coolant test kit, CC2626, to check the concentration level. Instructions are included with the test kit.

Refer to Section V, Coolant Recommenations/ Specifications, for more information.

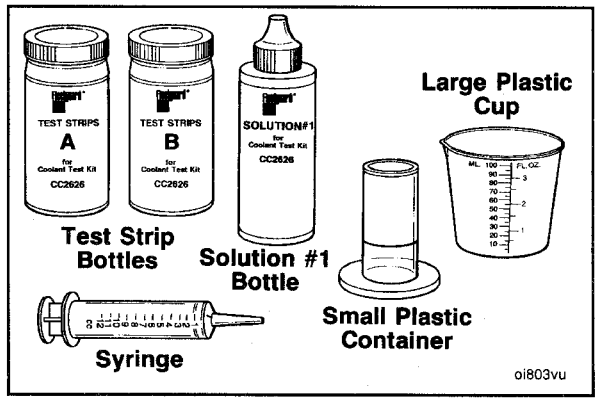

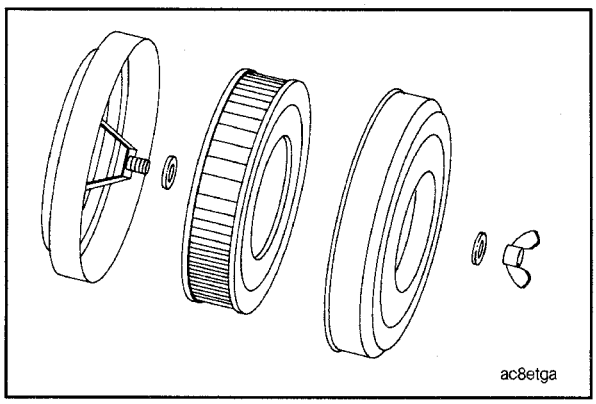

Air Compressor Air Cleaner Element (Cummins Two-Cylinder Only)

Replacement

Every 250 hours or 6 months, remove the wing nut which secures the cover to the housing. Remove the cover and the element. Clean the cover and the housing with a clean cloth. Visually inspect air cleaner cover and housing for signs of corrosion. Inspect the rubber gasket on the center bolt. Replace if damaged.

NOTE: Air cleaner cover and housing corrosion can allow debris and unfiltered air to enter the air compressor intake. This will cause premature air compressor failure.

Install a new element, Fleetguard® Part No. AF-251 or Cummins Part No. 256837, in the front cover and assemble over the center bolt. Use your fingers to install and tighten the wing nut.

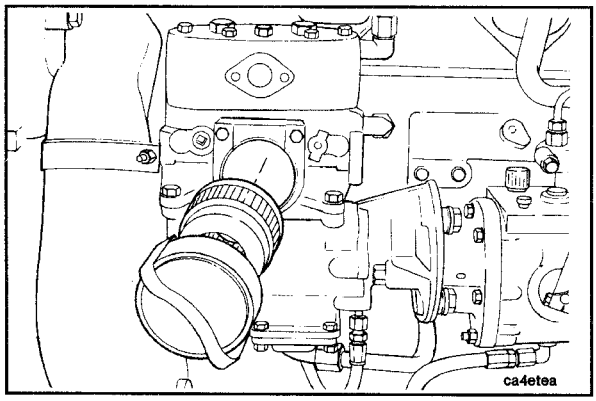

Replacement - Bendix-Westinghouse Paper Element

Remove the breather cover and element. Clean by reverse flushing with compressed air. Assemble on the compressor. Discard the element if it is damaged or can **not** be cleaned.

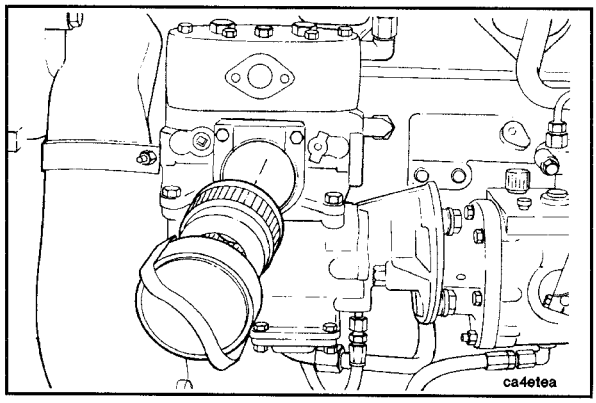

Replacement - Bendix-Westinghouse Sponge Element

Remove the breather from the air compressor. Disassemble the breather, wash all metal parts in solvent and blow dry with compressed air. Wash the element in solvent. Remove all solvent from the element. Dip the element in clean engine oil and squeeze excess oil from the element.

Section 6 - Maintenance Procedures Every 1500 Hours or 1 Year

Section Contents

Page

Crosshead Adjustment Procedure 6-17

Crossheads, Valves and Injectors - Adjustment - General Information 6-2

General Information 6-2

Injector Adjustment Procedures 6-4
Injector Adjustment - Dial Indicator Method (For Non-Top Stop Injectors Only) 6-5
Injector Adjustment - Outer Base Circle Method (For NTTA-450 Engines) 6-15
Injector Adjustment - Top Stop Zero Lash Method (For Non-STC Engines) 6-9
Injector Adjustment - Top Stop Zero Lash Method (For STC Engines) 6-12

Valve Adjustment Procedure 6-18

General Information

All checks or inspections listed under the previous maintenance intervals **must** also be performed at this time in addition to those listed under this maintenance interval.

Valve and Injector Adjustment Limits		
Top Stop Injector Preload: 0.6 to 0.7 N•m [5 to 6 in-lb]		
	mm	in
Intake Valve	0.28	0.011
Exhaust Valve	0.58	0.023

Crossheads, Valves and Injectors - Adjustment - General Information

Valves and injectors **must** be correctly adjusted for the engine to operate efficiently. Valve and injector adjustment **must** be performed using the values listed in this section.

Adjust the valves and the injectors at each 1500 hours or 1 year interval. Also, check adjustment after any major repair.

Valve and Injector Recheck Limits			
Top Stop Injector Preload: 0.00 to 0.05 mm [0.00 to 0.002 in] Lash			
	mm		in
Intake Valve	0.15	MIN	0.006
	0.41	MAX	0.016
Exhaust Valve	0.46	MIN	0.018
	0.76	MAX	0.030

If valve and injector adjustment is checked during troubleshooting or before the 1500 hours or 1 year scheduled maintenance interval, adjustment is **not** required if measurements are within the recheck limits.

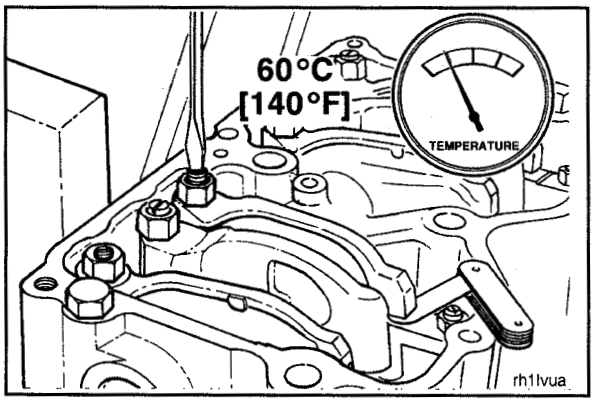

All overhead (crosshead, valve, and injector) adjustments **must** be made when the engine is cold (any stabilized coolant temperature at 60°C [140°F] or below).

NOTE: After an engine rebuild or any major repair where the injector setting **must** be disturbed, set all of the valves and injectors. Once the adjustment procedure has been completed, continue through the crankshaft rotation and check (adjust if necessary) the injector adjustment on cylinders No. 2, No. 3, and No. 6. This takes care of any camshaft and rocker lever shaft deflection which may have occurred during the initial adjustment.

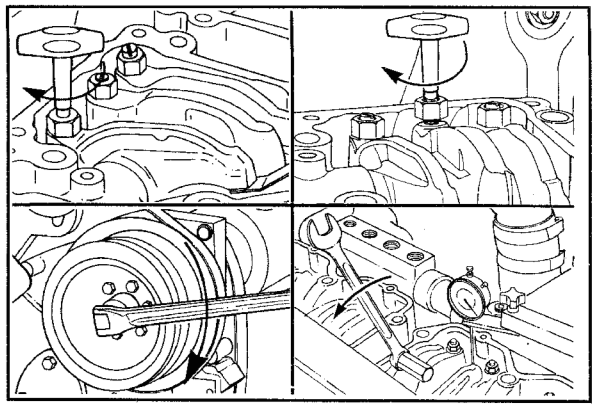

Remove the air crossover connection.

Remove the hose from the crankcase breather.

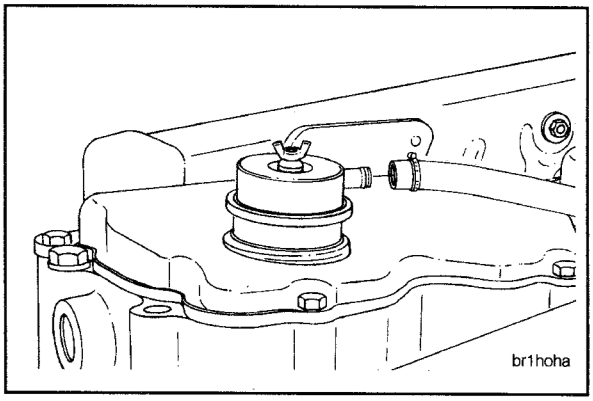

Remove the rocker housing cover.

Tighten the rocker housing capscrews.

Torque Value: 80 N•m [60 ft-lb]

Alternately tighten the injector hold down capscrews (Non-STC engines only).

Torque Value: 18 N•m [156 in-lb]

Tighten the single injector hold down capscrew (STC engines only).

Torque Value: 45 N•m [35 ft-lb]

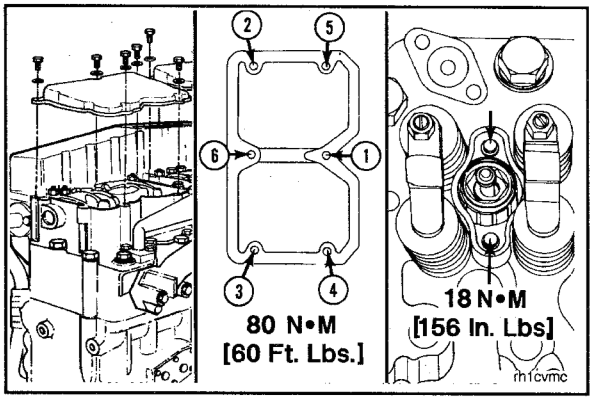

The valve set marks are located on the accessory drive pulley. The marks align with a pointer (cast-in or bolt-on, depending on the engine model) on the gear cover.

Warning: Do not pull or pry on the fan to manually rotate the engine. To do so can damage the fan blades. Damaged fan blades can cause premature fan failures which can result in serious personal injury or property damage.

Use the accessory drive shaft to rotate the crankshaft.

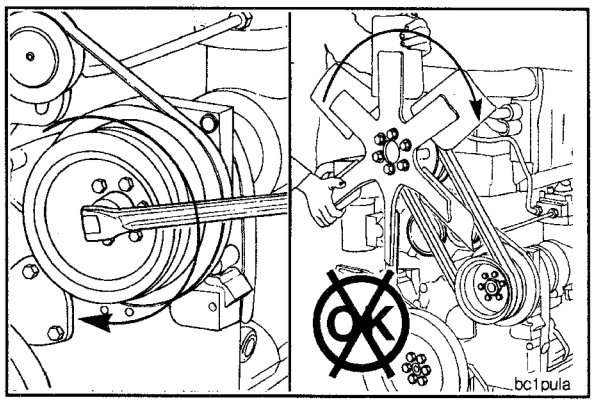

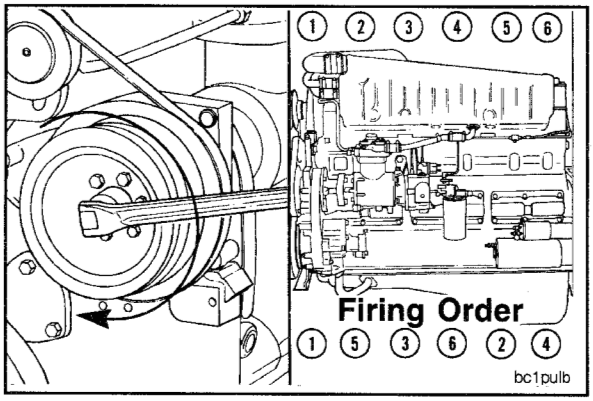

The crankshaft rotation is **clockwise** when viewed from the front of the engine.

The cylinders are numbered from the front end of the engine.

The engine firing order is 1-5-3-6-2-4.

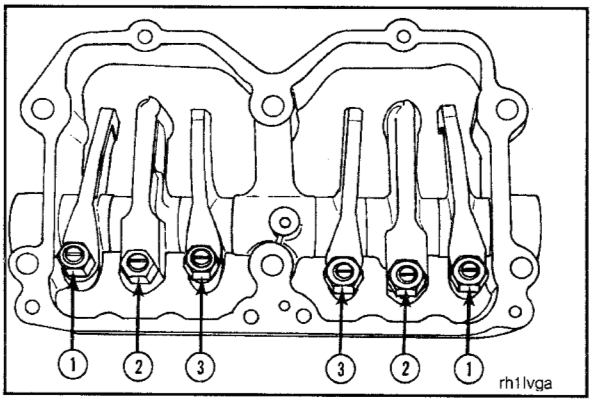

Each cylinder has three rocker levers. The rocker lever nearest to the center of the housing is the intake lever.

- The exhaust rocker lever (1).
- The injector rocker lever (2).
- The intake rocker lever (3).

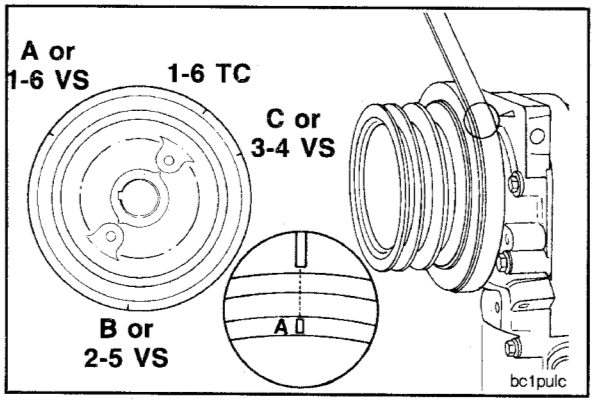

Injector Adjustment Procedures

There are three methods currently used to set valves and injectors on Big Cam NT industrial engines.

- Dial Indicator Method
- Inner Base Circle (IBC) Top Stop - Zero Lash
- Outer Base Circle (OBC)

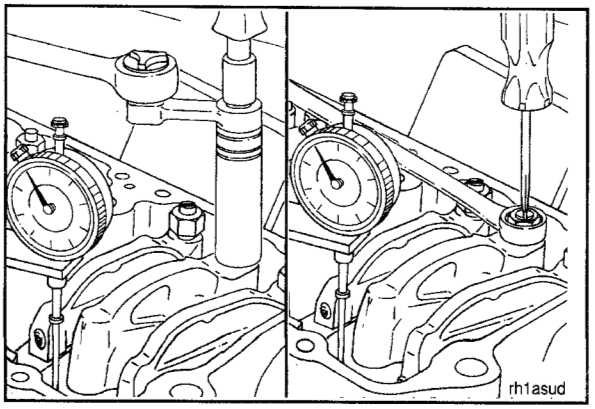

The dial indicator method is used on non-STC engines equipped with PTD non-top stop injectors. This design of injector does **not** have a plunger top stop cap and, therefore, requires that plunger travel be set in the engine.

The inner base circle top stop-zero lash method is used on engines equipped with PTD fixed time top stop and STC injectors that have plunger top stop caps. This injector design allows the plunger travel to be set in an injector stand outside the engine.

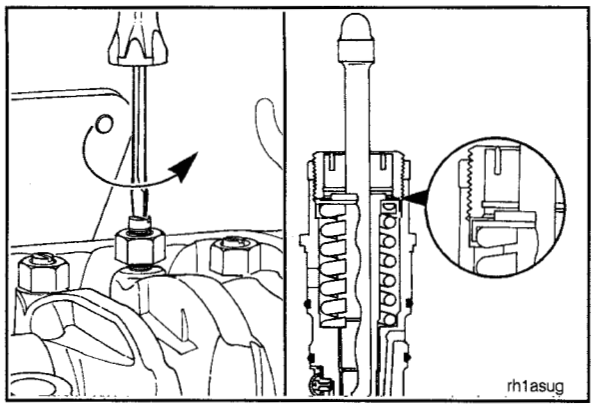

The outer base circle method is used on NTTA-450 engines, CPL 653 or 654, where injector plunger crush is set with the injectors installed in the engine and the plungers bottomed in the injector cups.

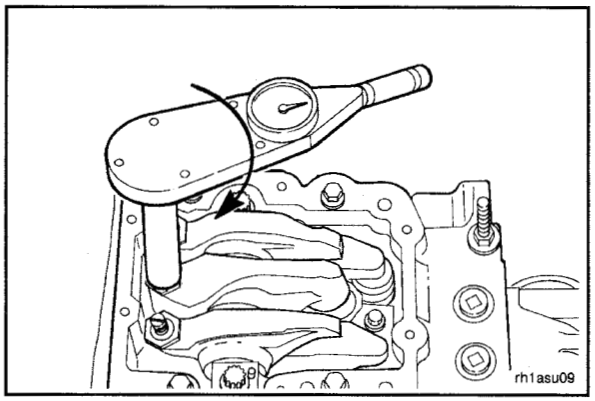

The following procedures will explain the three valve and injector adjustment methods.

NOTE: Read the entire procedure for the overhead adjustment before attempting to perform this operation.

Dial Indicator Method		IBC T.S. Zero Lash Method		OBC Method
CPL 0460	CPL 0567	CPL 0523	CPL 1315	CPL 0653*
CPL 0461	CPL 0573	CPL 0658	CPL 1381	CPL 0654*
CPL 0462	CPL 0574	CPL 0702	CPL 1382	
CPL 0463	CPL 0575	CPL 0757	CPL 1383	
CPL 0499	CPL 0582	CPL 0808	CPL 1415	
CPL 0512	CPL 0583	CPL 0908*	CPL 1416	
CPL 0538	CPL 0609	CPL 0909	CPL 1417	
CPL 0539	CPL 0650	CPL 0989*	CPL 1418	
CPL 0540	CPL 0657	CPL 0990*	CPL 1421*	
CPL 0541	CPL 0670	CPL 0991*	CPL 1425	
CPL 0542	CPL 0699	CPL 1183	CPL 1436*	
CPL 0545	CPL 0706	CPL 1193*	CPL 1502	
CPL 0551	CPL 0719	CPL 1194	CPL 1546	
CPL 0552	CPL 0732	CPL 1197	CPL 1557	
CPL 0553	CPL 0733	CPL 1204	CPL 1576	
CPL 0554	CPL 1310	CPL 1252	CPL 1594	
CPL 0566	CPL 1401	CPL 1255	CPL 1600	
		CPL 1314*		

* **Note:** Use bolt-on MVT pointer bracket for setting the overhead.

Injector Adjustment - Dial Indicator Method (For Non-Top Stop Injectors Only)

The valves and the injectors on the same cylinder are **not** adjusted at the same set mark on the accessory drive pulley.

One pair of valves and one injector are adjusted at each pulley set mark **before** rotating the accessory drive to the next set mark.

Two crankshaft revolutions are required to adjust all the valves and injectors.

Injector and Valve Adjustment Sequence

Bar Engine in Direction of Rotation	Pulley Position	Set Cylinder Injector	Valve
Start	A	3	5
Advance to	B	6	3
Advance to	C	2	6
Advance to	A	4	2
Advance to	B	1	4
Advance to	C	5	1

Firing Order: 1-5-3-6-2-4

oi100vd

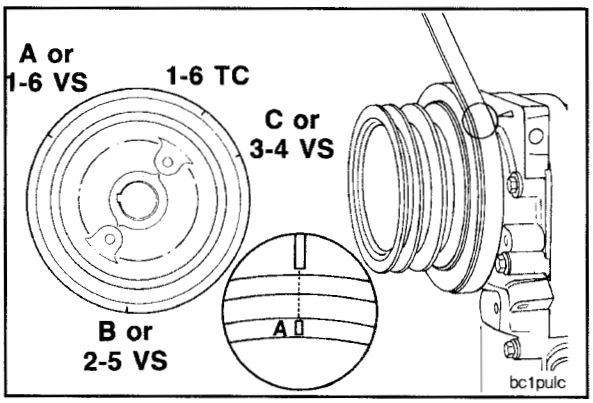

Rotate the accessory drive **clockwise** until the "A" valve set mark on the accessory drive pulley is aligned with the cast-in pointer on the gear cover.

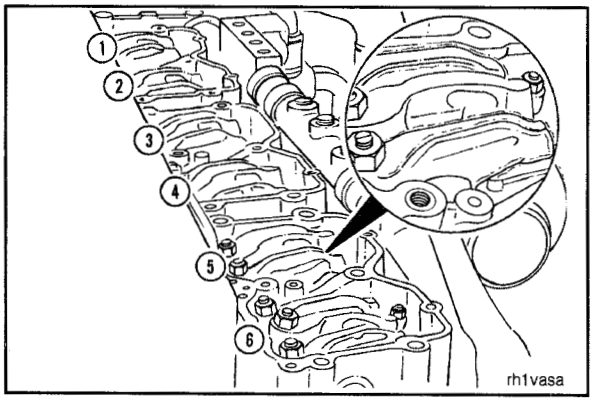

Check the valve rocker levers on cylinder No. 5 to see if both valves are closed.

NOTE: Both valves are closed when both rocker levers are loose and can be moved from side to side. If both valves are **not** closed, rotate the accessory drive one complete revolution; and align the "A" mark with the cast-in pointer again.

If the valve rocker lever adjusting screws have been loosened and **not** yet adjusted, watch the valve push tubes as the engine rolls upon the "A" mark. Both valve push tubes will have moved to the downward (valve closed) position if the engine is on the correct stroke.

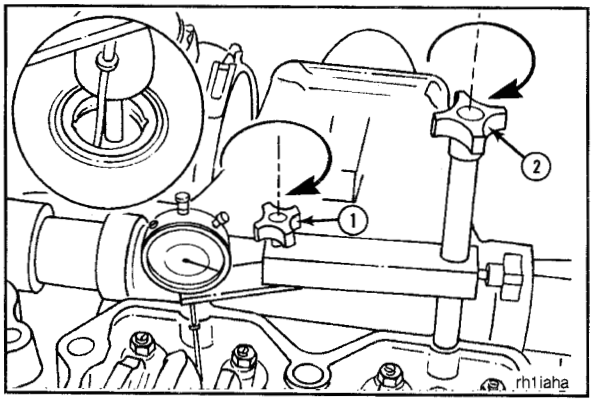

Caution: To prevent damage to the indicator or to avoid getting an incorrect reading, install the dial indicator extension so that it clears the rocker lever.

Install the dial indicator and the support from Part No. 3823610, Injector Adjustment Kit, so that the extension for the dial indicator is on top of the injector plunger flange on cylinder No. 3.

Securely tighten the thumb screw (1) and the hold down capscrew (2) in place.

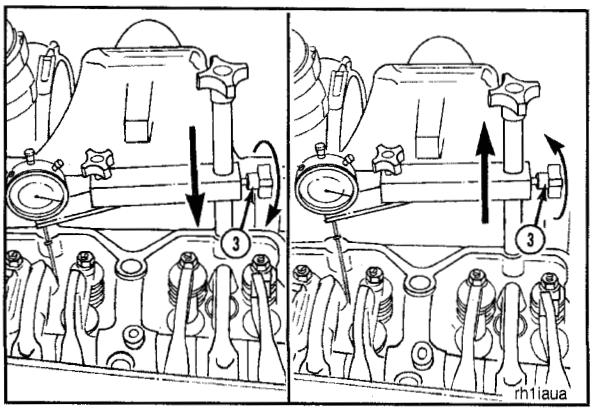

Loosen the thumb screw (3), and lower the indicator against the injector plunger flange until the stem is fully compressed.

Raise the indicator approximately 0.63 mm [0.025-inch], and tighten the thumb screw (3) to hold the indicator in position.

Warning: The injector plunger is under spring tension. Do not allow the tool to slip. Personal injury can result.

Use ST-1193, Rocker Lever Actuator, to depress the injector plunger three or four times to make sure all the oil and fuel have been removed from the injector assembly. Allow the lever to return slowly to prevent damage to the dial indicator.

Actuate the lever again, and set the dial indicator at "0" (zero) while holding the injector plunger to the bottom of its travel.

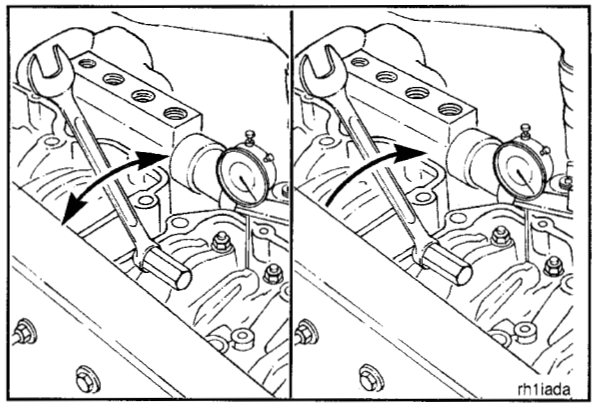

Slowly release the actuator, and check the indicator travel.

If the indicator travel is **not** at the following specification, proceed to the next step.

Injector Plunger Travel	
mm	in
5.79	0.228

If the indicator travel **is** at the specification, proceed to adjust the valves and crossheads on cylinder No. 5 as described in "Crosshead Adjustment" and "Valve Adjustment" later in this section.

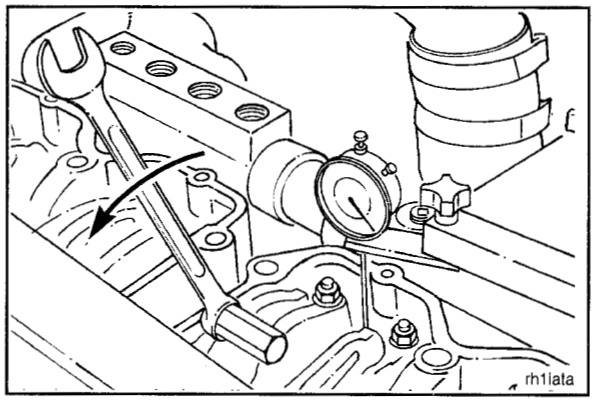

Loosen the lock nut on the injector adjusting screw.

Turn the adjusting screw **clockwise** or **counterclockwise** to adjust the injector plunger to the following dial indicator readings:

Injector Plunger Travel	
mm	in
5.79	0.228

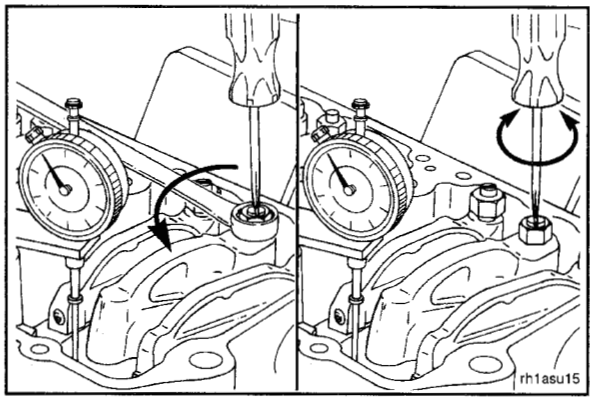

Hold the adjusting screw in this position. The adjusting screw **must not** turn when the lock nut is tightened. Tighten the lock nut to the following torque values:

With Torque Wrench Adapter, Part No. ST-669	47 N•m [35 ft-lb]
Without Adapter	61 N•m [45 ft-lb]

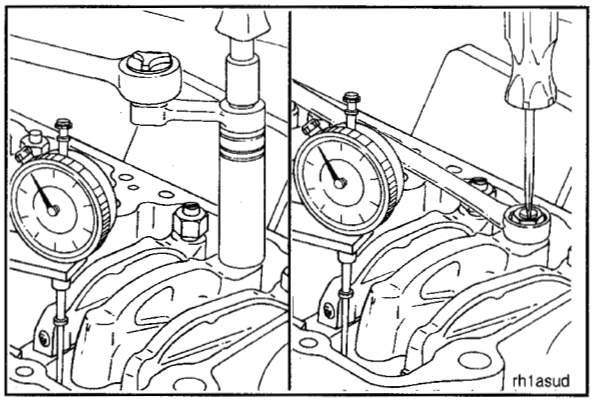

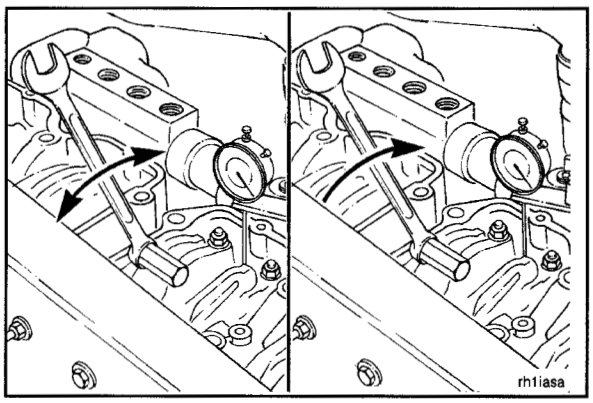

Warning: The injector plunger is under spring tension. Do not allow the tool to slip. Personal injury can result.

Actuate the injector rocker lever several times. Allow the lever to return slowly to prevent damage to the dial indicator. Hold the injector plunger to the bottom of its travel, and confirm the "0" (zero) reading on the dial indicator.

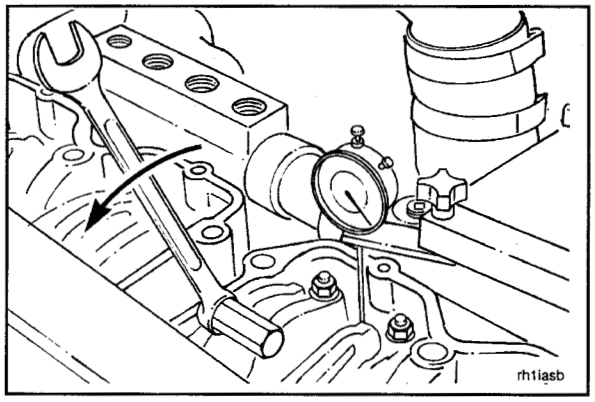

Allow the injector rocker lever to return slowly. Check the reading on the dial indicator. Repeat the adjusting process if the reading is **not** within specifications.

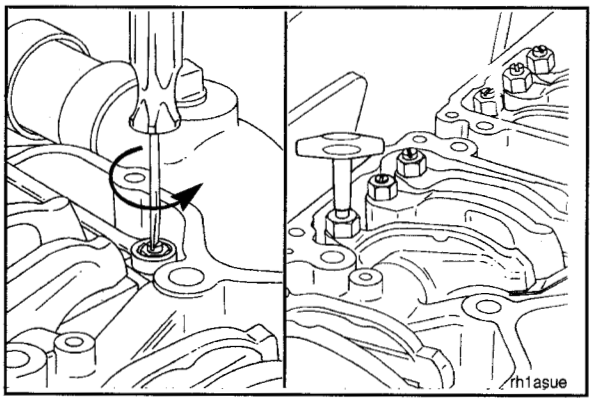

Adjust the crossheads and the valves on cylinder No. 5 **before** rotating the accessory drive to the next valve set mark. Refer to "Crosshead Adjustment" and "Valve Adjustment" later in this section.

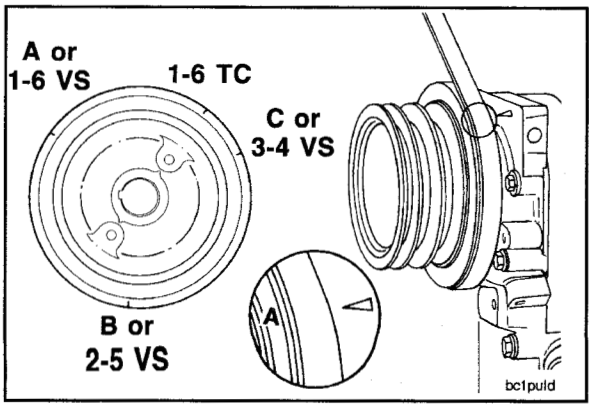

After adjusting the crossheads and the valves on cylinder No. 5, rotate the accessory drive and align the next valve set mark (B) on the accessory drive pulley with the cast-in pointer on the gear cover.

Adjust injector No. 6 and the crossheads and the valves on cylinder No. 3. Follow the Valve and Injector Adjustment Sequence Chart.

Following the Injector and Valve Adjustment Sequence chart, repeat the process to adjust all the injectors, crossheads, and valves correctly.

Injector and Valve Adjustment Sequence

Bar Engine in Direction of Rotation	Pulley Position	Set Cylinder Injector	Set Cylinder Valve
Start	A	3	5
Advance to	B	6	3
Advance to	C	2	6
Advance to	A	4	2
Advance to	B	1	4
Advance to	C	5	1

Firing Order: 1-5-3-6-2-4

oi100vd

Injector Adjustment - Top Stop Zero Lash Method (For Non-STC Engines)

The adjustment sequence here is identical to the dial indicator method.

The valves and the injectors on the same cylinder are **not** adjusted at the same set mark on the accessory drive pulley.

One pair of valves and one injector are adjusted at each pulley set mark **before** rotating the accessory drive to the next set mark.

Two crankshaft revolutions are required to adjust all the valves and injectors.

Injector and Valve Adjustment Sequence

Bar Engine in Direction of Rotation	Pulley Position	Set Cylinder Injector	Set Cylinder Valve
Start	A	3	5
Advance to	B	6	3
Advance to	C	2	6
Advance to	A	4	2
Advance to	B	1	4
Advance to	C	5	1

Firing Order: 1-5-3-6-2-4

oi100vd

With this method, the injector plunger travel **must** be set on an injector stand with the injectors removed from the engine.

Caution: Top stop injector plunger travel can only be adjusted when the injectors are removed from the engine. Part No. 3822696, Adjusting Tool, must be used to make this adjustment. Refer to Bulletin No. 3810344 for Top-Stop injectors.

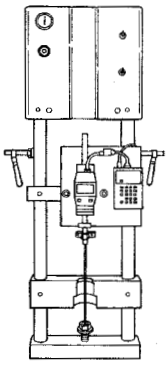

fi8pgue

Rotate the accessory drive **clockwise** until the "A" valve set mark on the accessory drive pulley is aligned with the cast-in pointer.

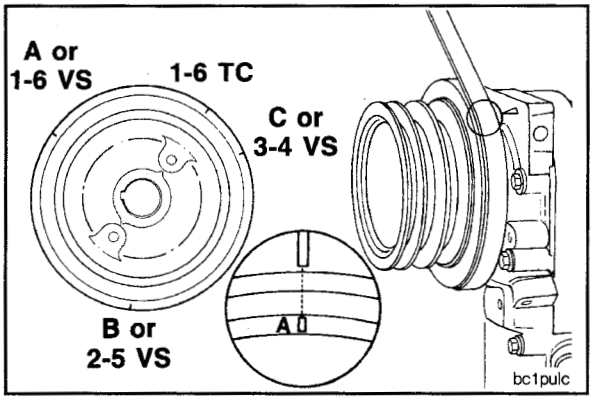

bc1pulc

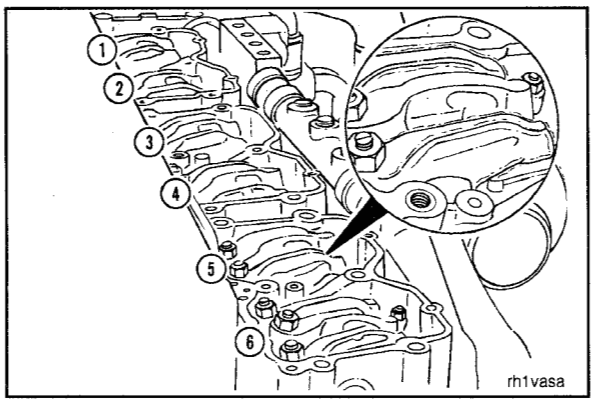

Check the valve rocker levers on cylinder No. 5 to see if both valves are closed.

NOTE: Both valves are closed when both rocker levers are loose and can be moved from side to side. If both valves are **not** closed, rotate the accessory drive one complete revolution; and align the "A" mark with the cast-in pointer again.

If the valve rocker lever adjusting screws have been loosened and **not** yet adjusted, watch the valve push tubes as the engine rolls upon the "A" mark. Both valve push tubes will have moved to the downward (valve closed) position if the engine is on the correct stroke.

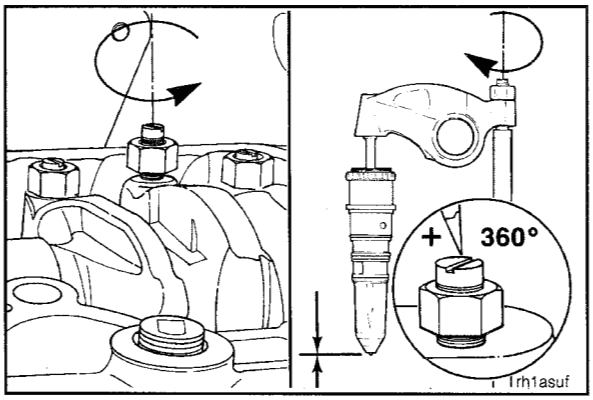

Loosen the lock nut on the injector adjusting screw on cylinder No. 3. Tighten the adjusting screw until all the clearance is removed between the rocker lever and injector link.

Tighten the adjusting screw one additional turn to correctly seat the link.

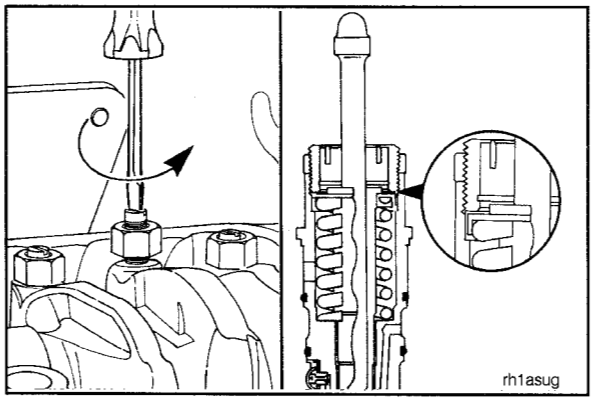

Loosen the injector adjusting screw until the injector spring retainer washer touches the top stop screw.

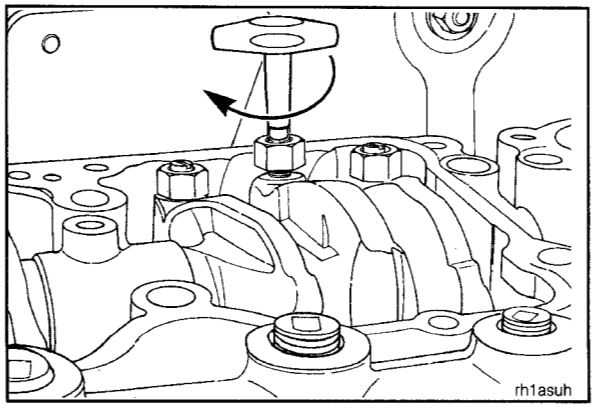

Caution: An overtightened setting on the injector adjusting screw will produce increased stress on the injector train and the camshaft injector lobe which can result in engine damage.

Use torque wrench, Part No. 3376592, to tighten the adjusting screw.

Torque Value: 0.6 to 0.7 N•m [5 to 6 in-lb]

Hold the adjusting screw in this position. The adjusting screw **must not** turn when the lock nut is tightened.

Torque Values:

With torque wrench adapter, Part No. ST-669	47 N•m [35 ft-lb]
Without adapter	61 N•m [45 ft-lb]

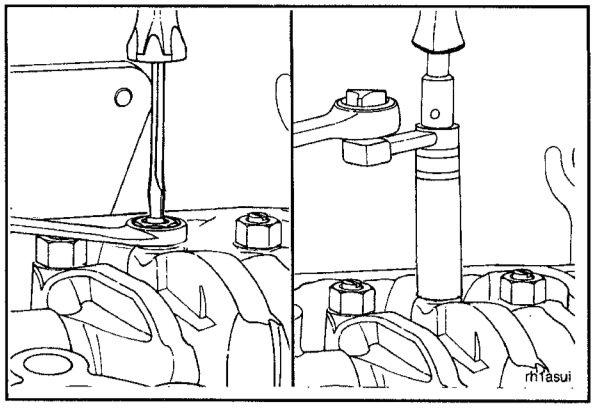

Adjust the crossheads and the valves on cylinder No. 5 **before** rotating the accessory drive to the next valve set mark. Refer to "Crosshead Adjustment" and "Valve Adjustment".

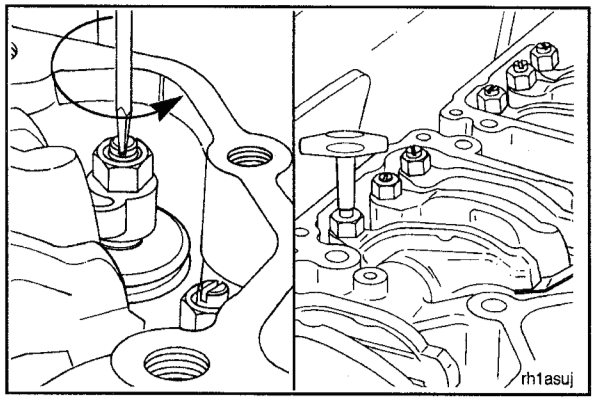

After adjusting the crossheads and the valves on cylinder No. 5, rotate the accessory drive and align the next valve set mark (B) on the accessory drive pulley with the cast-in pointer on the gear cover.

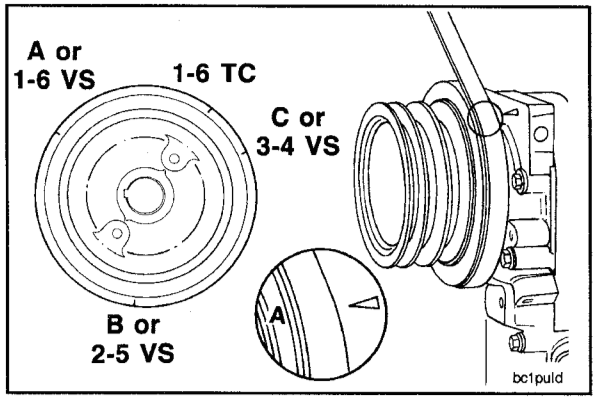

Adjust injector No. 6 and the crossheads and the valves on cylinder No. 3.

Repeat the process following the Injector and Valve Adjustment Sequence Chart to adjust all injectors, crossheads, and valves correctly.

Injector and Valve Adjustment Sequence

Bar Engine in Direction of Rotation	Pulley Position	Set Cylinder Injector	Valve
Start	A	3	5
Advance to	B	6	3
Advance to	C	2	6
Advance to	A	4	2
Advance to	B	1	4
Advance to	C	5	1

Firing Order: 1-5-3-6-2-4

oi100vd

Injector and Valve Adjustment Sequence			
Bar Engine in Direction of Rotation	Pulley Position	Set Cylinder Injector	Valve
Start	A	3	5
Advance to	B	6	3
Advance to	C	2	6
Advance to	A	4	2
Advance to	B	1	4
Advance to	C	5	1
Firing Order: 1-5-3-6-2-4			

oi100vd

Injector Adjustment - Top Stop Zero Lash Method (For STC Engines)

The STC injector preload setting is made at the same injector adjustment position on the accessory drive pulley which is used for the dial indicator method.

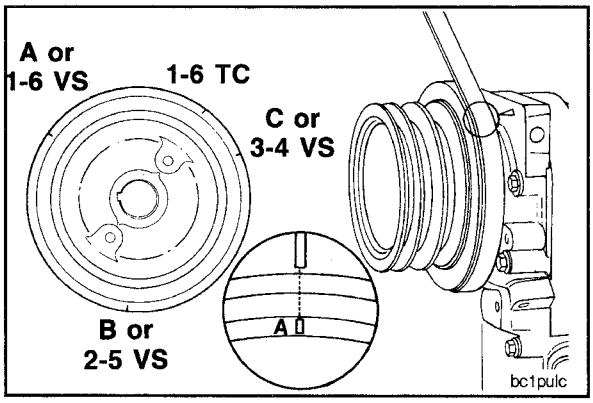

Rotate the accessory drive **clockwise** until the "A" valve set mark on the accessory drive pulley is aligned with the cast-in pointer on the gear cover or the bolt-on pointer for the NTA-450 engine.

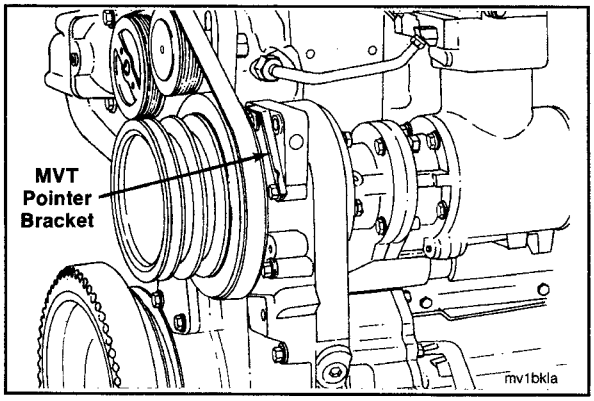

The NTA-450 engine (CPL 908, 989, 990, 991, 1193, 1314, 1421, 1436) is equipped with a special bolt-on pointer bracket which **must** be aligned with the valve set marks on the accessory drive pulley due to the special camshaft design. The pointer is positioned 40 degrees **clockwise** from the cast-in pointer on the gear cover.

NOTE: Do **not** use the "TC" (top center) mark on the accessory drive pulley in reference with the bolt-on pointer.

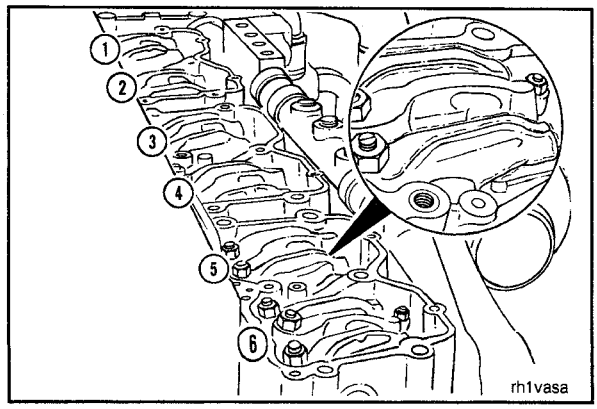

Check the valve rocker levers on cylinder No. 5 to see if both valves are closed.

NOTE: Both valves are closed when both rocker levers are loose and can be moved from side to side. If both valves are **not** closed, rotate the accessory drive one complete revolution; and align the "A" mark with the cast-in pointer or the bolt-on pointer again.

If the valve rocker lever adjusting screws have been loosened and **not** yet adjusted, watch the valve push tubes as the engine rolls upon the "A" mark. Both valve push tubes will have moved to the downward (valve closed) position if the engine is on the correct stroke.

Loosen the lock nut on the injector adjusting screw on cylinder No. 3. Tighten the adjusting screw until all the clearance is removed between the rocker lever and injector link.

Tighten the adjusting screw one additional turn to correctly seat the link.

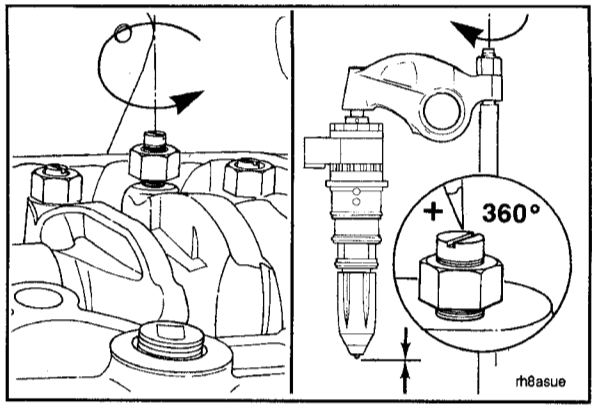

Loosen the injector adjusting screw until the STC tappet touches the top-cap of the injector.

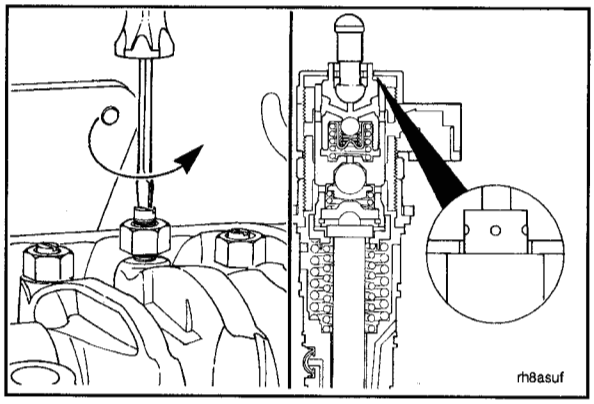

Place STC tappet retaining tool, Part No. 3823348, on the upper surface of the STC injector top-cap. Rotate the tool around the tappet until the tool's locating pin is inserted into one of the four holes in the top of the tappet.

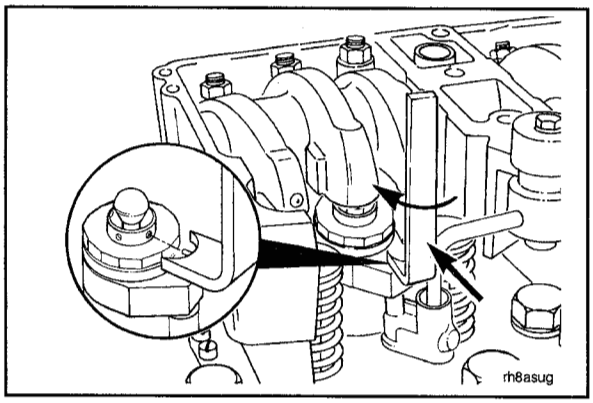

Apply thumb pressure to the tool handle to hold the tappet in the maximum upward position.

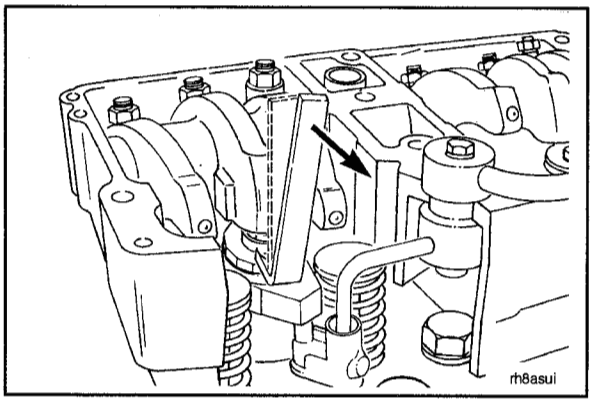

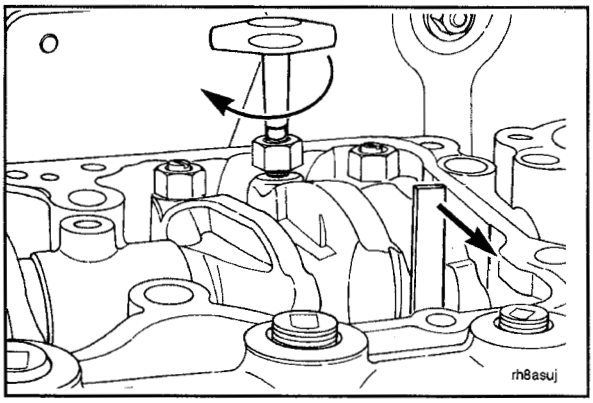

Caution: An overtightened setting on the injector adjusting screw will produce increased stress on the injector train and the camshaft injector lobe which can result in engine damage.

While holding the tappet up with the tool, use Part No. 3376592, torque wrench, to tighten the adjusting screw.

Torque Value: 0.6 to 0.7 N•m [5 to 6 in-lb]

NOTE: Apply enough pressure on the tool handle so that the tappet does **not** move downward when the 0.6 to 0.7 N•m [5 to 6 in-lb] torque is applied.

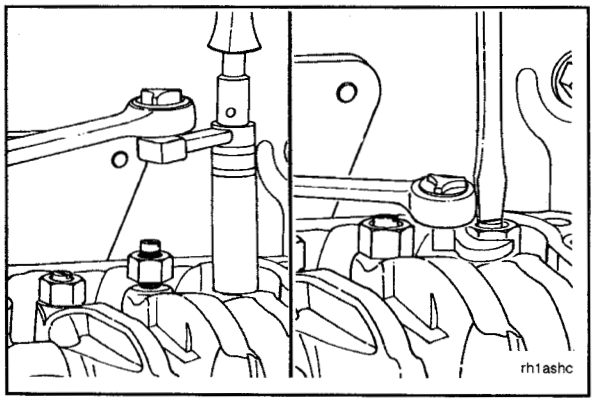

Hold the adjusting screw in this position. The adjusting screws **must not** turn when the lock nut is tightened. Tighten the lock nut to the following torque values:

With torque wrench adapter, Part No. ST-669	47 N•m [35 ft-lb]
Without Adapter	61 N•m [45 ft-lb]

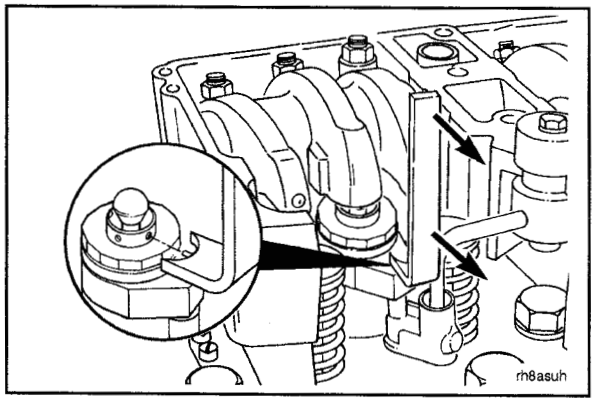

Remove the tappet retaining tool.

Caution: The tappet tool must be removed before rotating the crankshaft to prevent damage to the tappet and/or tappet retaining tool.

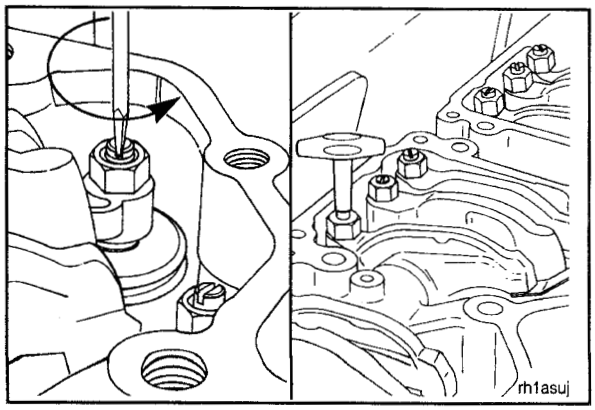

Adjust the crossheads and the valves on cylinder No. 5 **before** rotating the accessory drive to the next valve set mark. Refer to "Crosshead Adjustment" and "Valve Adjustment" later in this section.

After adjusting the crossheads and the valves on cylinder No. 5, rotate the accessory drive and align the next valve set mark (B) on the accessory drive pulley with the cast-in or bolt-on pointer on the gear cover.

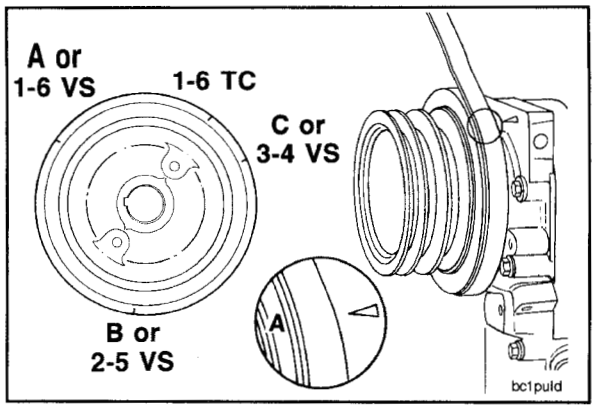

Adjust the appropriate crossheads, injector, and the valves following the Injector and Valve Adjustment Sequence Chart.

Repeat the process to adjust all injectors, crossheads, and valves correctly.

Injector and Valve Adjustment Sequence

Bar Engine in Direction of Rotation	Pulley Position	Set Cylinder Injector	Valve
Start	A	3	5
Advance to	B	6	3
Advance to	C	2	6
Advance to	A	4	2
Advance to	B	1	4
Advance to	C	5	1

Firing Order: 1-5-3-6-2-4

oi100vd

Injector Adjustment - Outer Base Circle Method (For NTTA-450 Engines)

Rotate the accessory drive in the direction of engine rotation. The accessory drive will rotate **clockwise** on a right hand engine, when looking at the front of the engine. Align the "A" or "1-6VS" mark on the accessory drive pulley with the bolt-on pointer on the gear cover.

NOTE: On the NTTA-450 engine, the camshaft design characteristics necessitate that all six injectors **must** be adjusted first before adjusting the valves. For adjusting crossheads and valves, use the top stop zero lash or IBC sequence and follow the procedures for "Crosshead Adjustment" and "Valve Adjustment" later in this section.

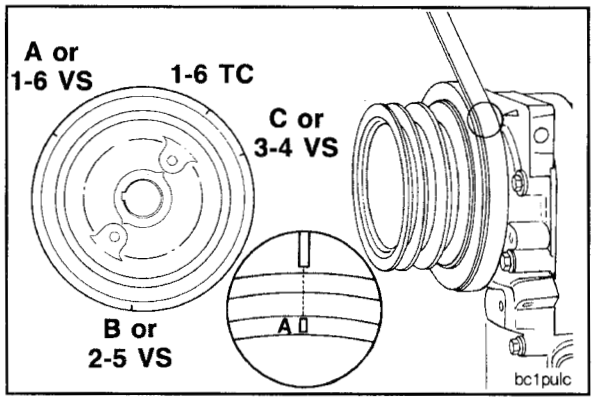

The NTTA-450 engine (CPL 653 and 654) is equipped with a special bolt-on pointer bracket which **must** be aligned with the valve set marks on the accessory drive pulley due to the special camshaft design. The pointer is positioned 40 degrees **clockwise** from the cast-in pointer on the gear cover.

NOTE: Do **not** use the "TC" (top center) mark on the accessory drive pulley in reference with the bolt-on pointer.

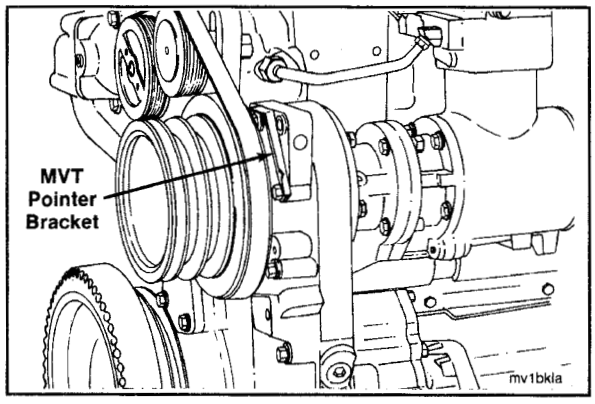

Outer Base Circle (OBC) Injector Adjustment Sequence		
Bar Engine In Direction of Rotation	**Pulley Position**	**Set Cylinder Injector**
Start	A	1
Advance to	B	5
Advance to	C	3
Advance to	A	6
Advance to	B	2
Advance to	C	4
Firing Order:1-5-3-6-2-4		

Check the valve rocker levers on cylinder No. 1 to see if both valves are closed.

NOTE: Both the intake and exhaust valves are closed when both rocker levers are loose and can be moved from side to side. If both valves are **not** closed, rotate the accessory drive one complete revolution and align the "A" mark with the bolt-on pointer again.

If the valve rocker lever adjusting screws have been loosened and **not** yet adjusted, watch the valve push tubes as the engine rolls upon the "A" mark. Both valve push tubes will have moved to the downward (valve closed) position if the engine is on the correct stroke.

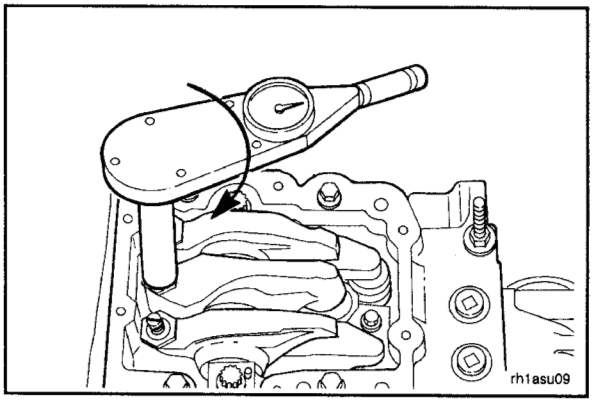

Use a dial type torque wrench to tighten the injector rocker lever adjusting screw to 11 N•m [100 in-lb].

Hold the torque wrench in a position that allows you to look in a direct line at the dial. This is to make sure that you read the dial accurately.

The torque wrench **must** be calibrated, have a resolution of 0.28 N•m [2.5 in-lb], and have a range of 17 N•m [150 in-lb].

On non-brake engines, if the injector adjusting screw is a slotted-head type, be careful that the screw driver does **not** slip out of the slot. These screws can be replaced with hexagon head screws.

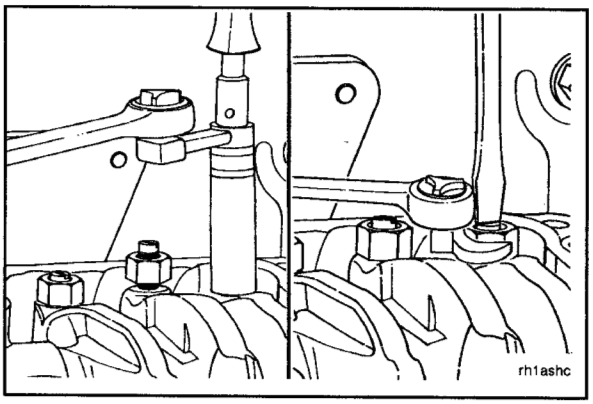

Hold the adjusting screw in this position. The adjusting screws **must not** turn when the lock nut is tightened. Tighten the lock nut to the following torque values:

With torque wrench adapter, Part No. ST-669	47 N•m [35 ft-lb]
Without adapter	61 N•m [45 ft-lb]

Outer Base Circle (OBC) Injector Adjustment Sequence		
Bar Engine In Direction of Rotation	**Pulley Position**	**Set Cylinder Injector**
Start	A	1
Advance to	B	5
Advance to	C	3
Advance to	A	6
Advance to B	B	2
Advance to	C	4
Firing Order:1-5-3-6-2-4		

After adjusting the first injector, rotate the accessory drive and align the next injector set mark (B) on the accessory drive pulley with the bolt-on pointer on the gear cover.

Complete this process until all six injectors have been set.

Adjust the crossheads and the valves on the NTTA-450 using the adjustment sequence that is used for dial indicator and top stop zero lash injector adjustment. Refer to "Crosshead Adjustment" and "Valve Adjustment" later in this section.

NOTE: Use the bolt-on pointer on the gear cover when adjusting crossheads and valves on the NTTA-450 engine.

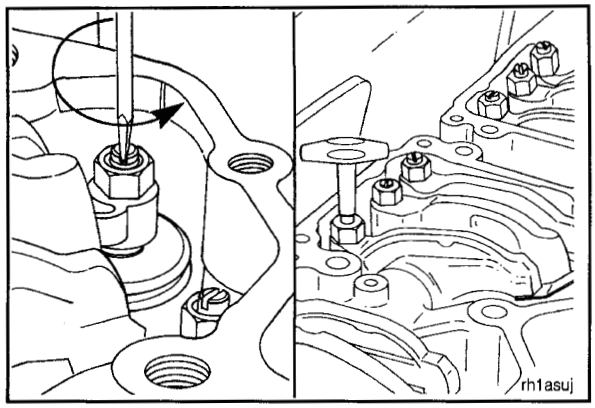

Crosshead Adjustment Procedure

NOTE: Crosshead adjustment **must always** be made before attempting to adjust the valves.

With the "A" valve set mark aligned with the pointer on the gear cover (use bolt-on pointer for NTA-450 and NTTA-450 engines; cast-in pointer otherwise) and both valves closed on cylinder No. 5, loosen the crosshead adjusting screw lock nuts on the intake and the exhaust valve crossheads for cylinder No. 5.

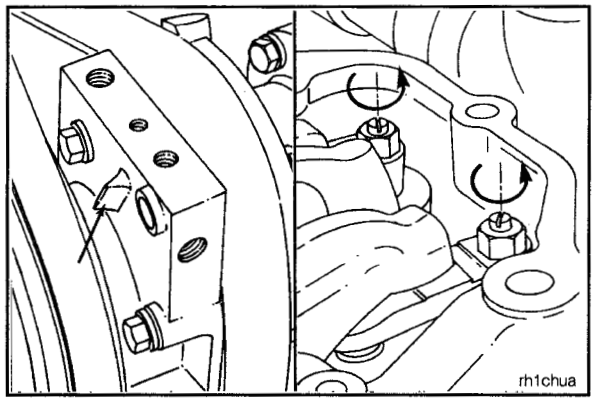

NOTE: Use the following procedure to adjust both the intake and the exhaust crossheads:

Turn the adjusting screw out at least one turn.

Hold the crosshead down against its mating valve stems.

Turn the adjusting screw in until it touches the top of the valve stem but does **not** raise the crosshead.

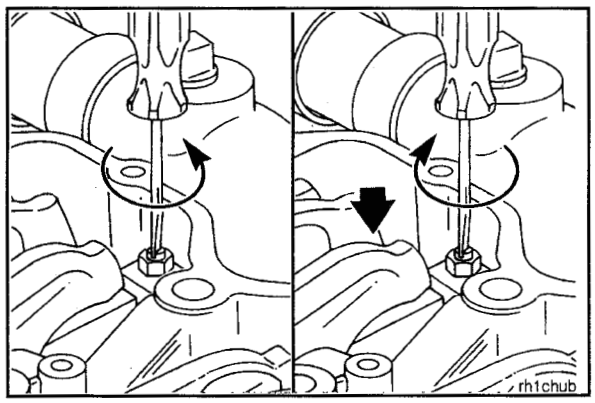

Hold the adjusting screw in this position. The adjusting screw **must not** turn when the lock nut is tightened to its torque value. Tighten the lock nut. The following torque values are given with and without torque wrench adapter (1), Part No. ST-669:

	Torque Values	
	N•m	ft-lb
With torque wrench adapter, Part No. ST-669 (1)	34	25
Without adapter	41	30

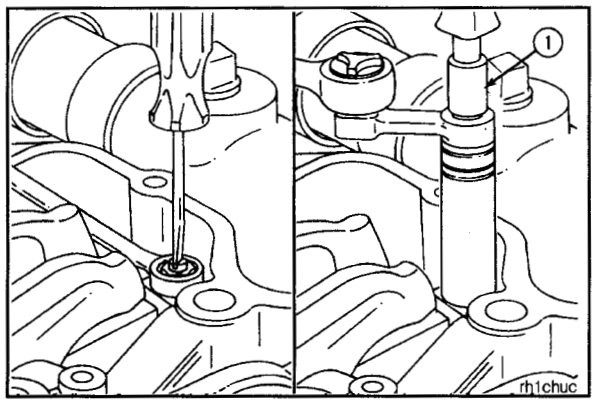

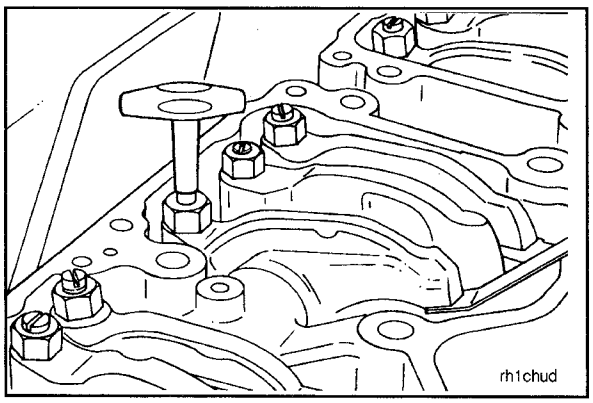

Adjust the intake and the exhaust valves on No. 5 cylinder **before** rotating the accessory drive to the next valve set mark. Refer to "Valve Adjustment Procedure" later in this section.

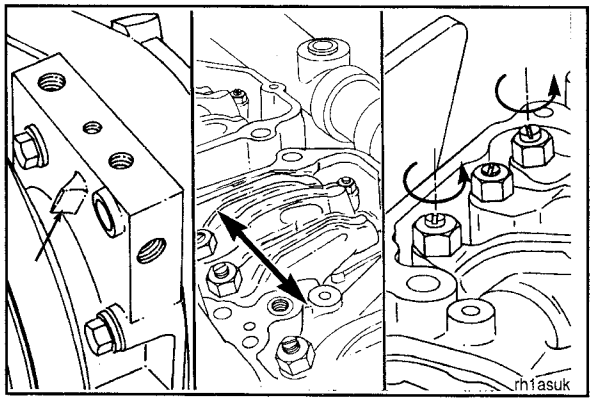

Valve Adjustment Procedure

With the "A" valve set mark aligned with the pointer on the gear cover (use bolt-on pointer for NTA-450 and NTTA-450 engines; cast-in pointer otherwise) and both valves closed on cylinder No. 5, loosen the lock nuts on the intake and the exhaust valve adjusting screws.

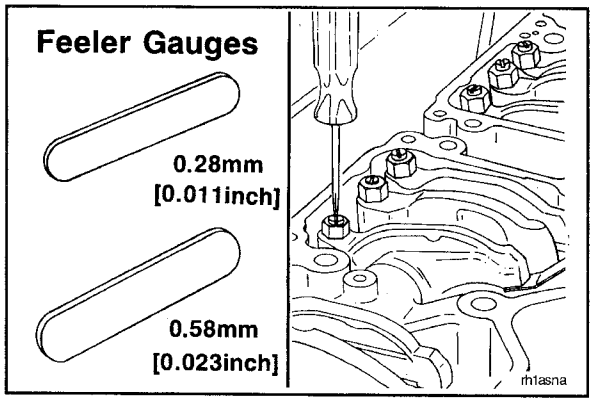

Select a feeler gauge for the correct valve lash specification.

Valve Lash Specifications	
Intake	**Exhaust**
0.28 mm [0.011-inch]	0.58 mm [0.023-inch]

Insert the feeler gauge between the top of the crosshead and the rocker lever pad.

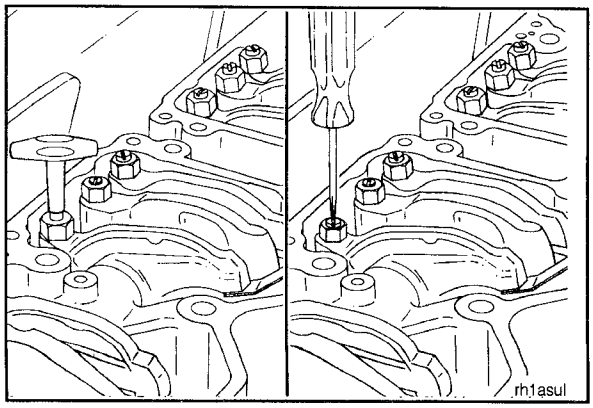

Two different methods for establishing valve lash clearance are described below. Either method can be used; however, the torque wrench method has proven to be the most consistent. It eliminates the need to feel the drag on the feeler gauge.

- **Torque Wrench Method:** Use the inch pound torque wrench, Part No. 3376592 (normally used to set preload on top stop injectors), and tighten the adjusting screw.

Torque Value: 0.7 N•m [6 in-lb]

- **Feel Method:** Tighten the adjusting screw until a slight drag is felt on the feeler gauge.

Hold the adjusting screw in this position. The adjusting screw **must not** turn when the lock nut is tightened.

Torque Values:

With torque wrench adapter, Part No. ST-669	47 N•m [35 ft-lb]
Without adapter	61 N•m [45 ft-lb]

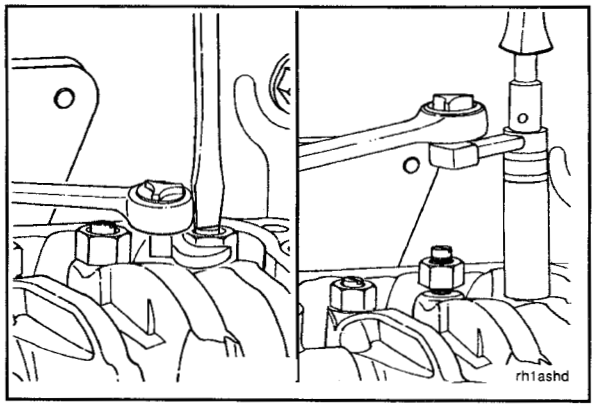

After tightening the lock nut to the correct torque value, check to make sure the feeler gauge will slide backward and forward between the crosshead and the rocker lever with only a slight drag.

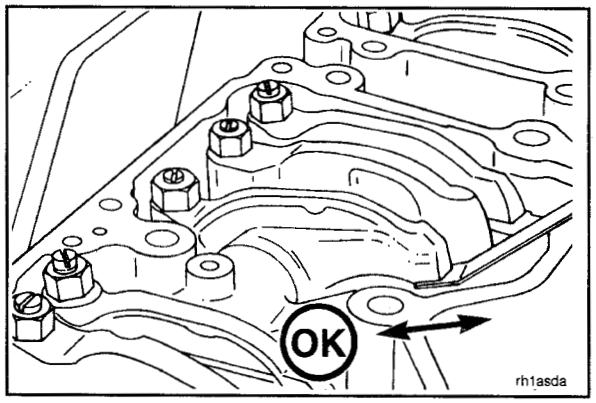

If using the feel method, attempt to insert a feeler gauge that is 0.03 mm [0.001-inch] thicker between the crosshead and the rocker lever pad. The valve lash is **not** correct when a thicker feeler gauge will fit.

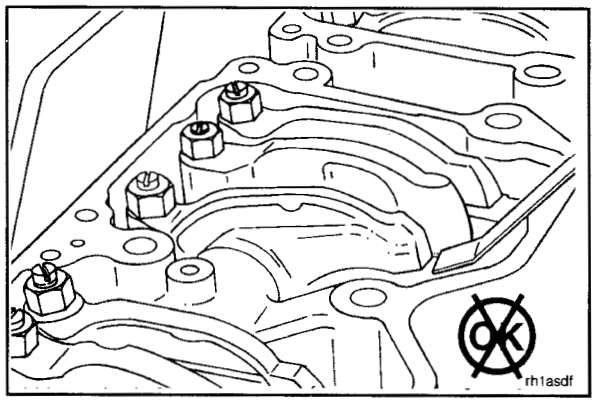

After adjusting the crossheads and the valves on cylinder No. 5, rotate the accessory drive and align the next valve set mark with the pointer (bolt-on pointer for NTA-450 and NTTA-450 engines; cast-in pointer otherwise).

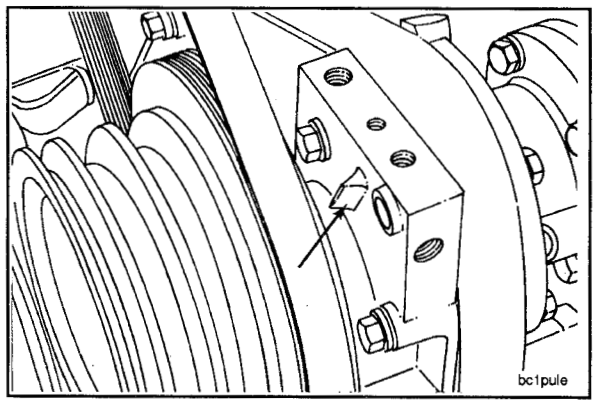

Valve Adjustment Sequence		
Bar Engine In Direction of Rotation	**Pulley Position**	**Set Cylinder Valve**
Start	A	5
Advance to	B	3
Advance to	C	6
Advance to	A	2
Advance to	B	4
Advance to	C	1
Firing Order:1-5-3-6-2-4		

Adjust the appropriate crossheads and the valves following the Valve Adjustment Sequence Chart.

Repeat the process to adjust all injectors, crossheads, and valves correctly.

NOTE: All engines except the NTTA-450 allow adjustment of valves and injectors concurrently. The NTTA camshaft design characteristics necessitate that all injectors be set first, and then crossheads and valves be set using this procedure.

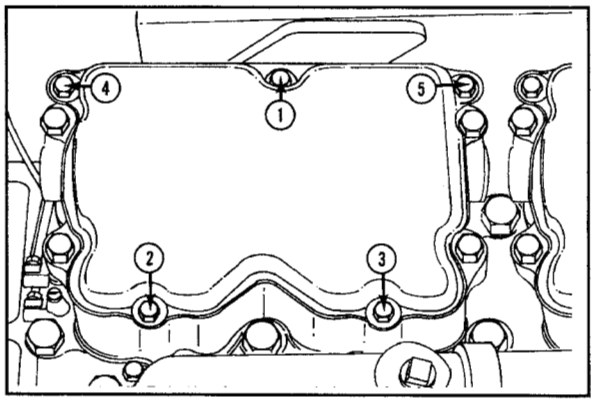



Install the rocker housing covers. Tighten the capscrews in each cover in the sequence shown.

Torque Value: 20 N•m [15 ft-lb]

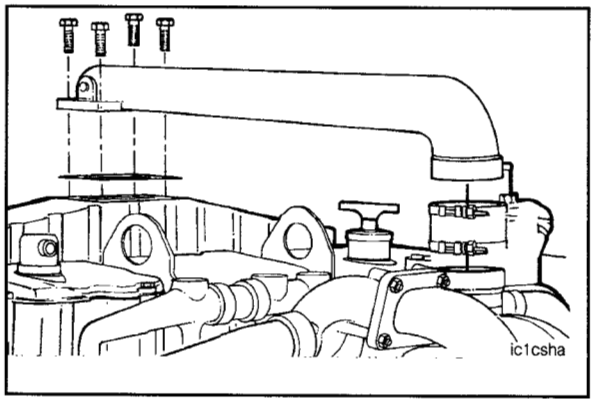



Install the crossover connection. Tighten the mounting capscrews.

Torque Value: 34 N•m [25 ft-lb]

Tighten the hose clamps.

Torque Value: 7.9 N•m [70 in-lb]

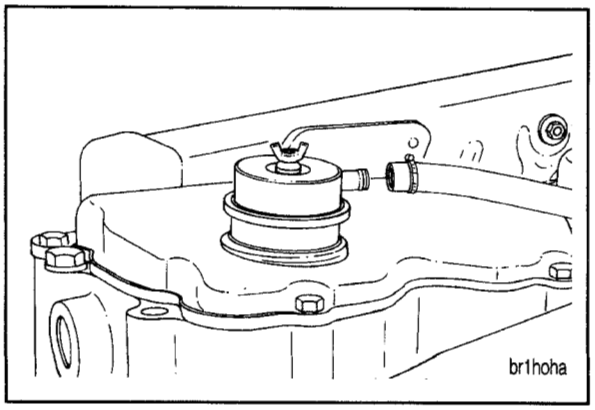



Install the crankcase breather element, the oil filler cap and hose. Tighten the hose clamp.

Torque Value: 4.5 N•m [40 in-lb]

Section 7 - Annual Maintenance Procedures

Section Contents

Page

Batteries 7-4
Checking 7-4

Crankshaft End Clearance 7-3
Checking 7-3

Engine 7-2
Steam or Chemically Clean 7-2

Engine Mounting Bolts 7-3
Checking 7-3

General Information 7-2

Heat Exchanger Zinc Plugs (Marine Only) 7-4
Checking 7-4

Hoses 7-2
Checking and Replacement 7-2

Thermal Aids 7-2
Checking 7-2

Turbocharger Mounting Nuts 7-5
Checking 7-5

General Information

All checks or inspections listed under the previous maintenance intervals **must** also be performed at this time in addition to those listed under this maintenance interval.

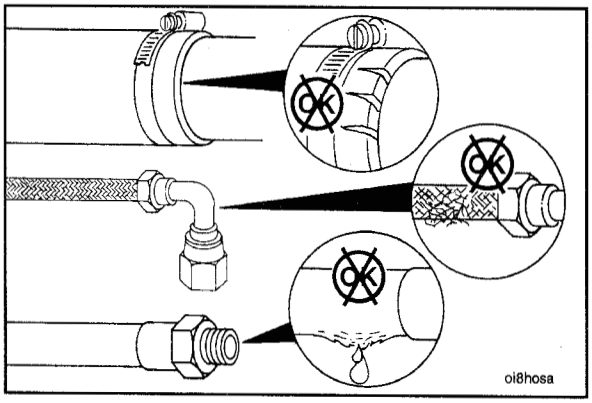

Hoses

Checking and Replacement

Annually inspect the cooling system hoses and hose connections for leaks or deterioration. Particles of deteriorated hose can be carried through the cooling system and slow or partially stop circulation.

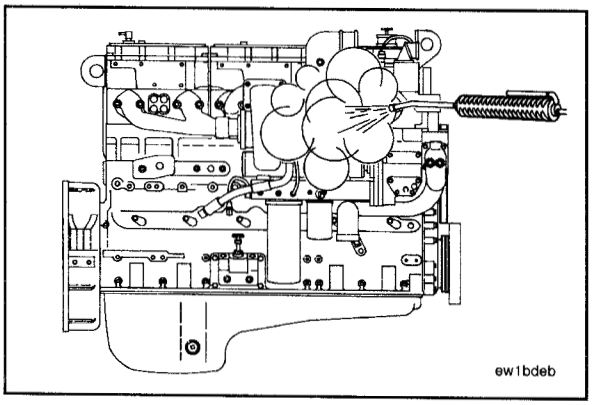

Engine

Steam or Chemically Clean

Warning: When using a steam cleaner, wear protective clothing and safety glasses or a face shield. Hot steam will cause serious personal injury.

The engine **must** be steam cleaned annually. Steam is the best method of cleaning a dirty engine or a piece of equipment. If steam is **not** available, use a solvent to wash the engine.

Protect all electrical components, openings, and wiring from the full force of the cleaner spray nozzle.

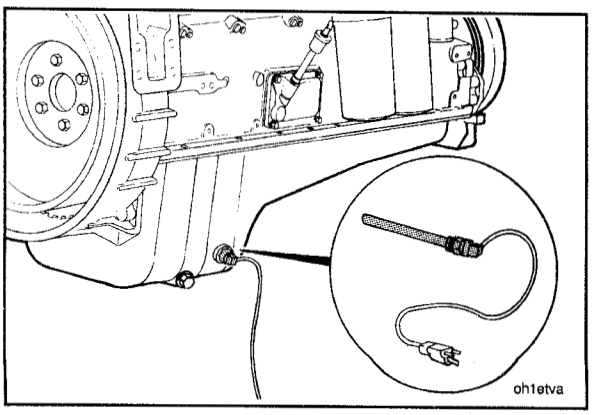

Thermal Aids

Checking

- Oil pan heater

Check for proper operation. Inspect for loose connections, frayed wires, and oil leaks. Repair or replace as needed.

- Block heater

Check for proper operation. Inspect for loose connections, frayed wires, and oil leaks. Repair or replace as needed.

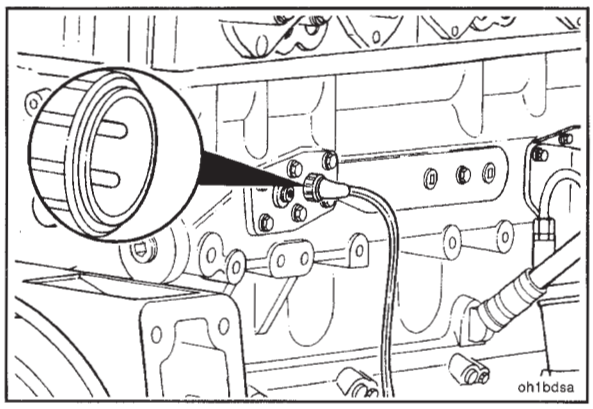

- Engine Pre-heater (Coolant)

Check for proper operation. Inspect for loose connections, frayed wires, and coolant leaks. Clean out the unit of alkali and sludge. Clean the scale from the copper heating element with a wire brush.

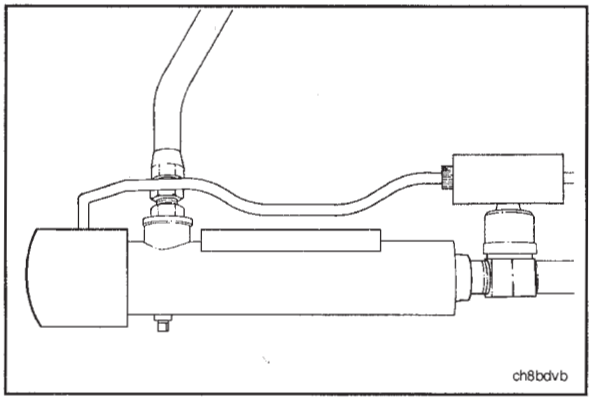

Engine Mounting Bolts

Checking

Check the torque on the engine mount nuts and bolts annually. Tighten any that are loose. Refer to the equipment manufacturer for torque specifications. Inspect the rubber for deterioration and age hardening. Replace any broken or lost bolts, capscrews, or damaged rubber.

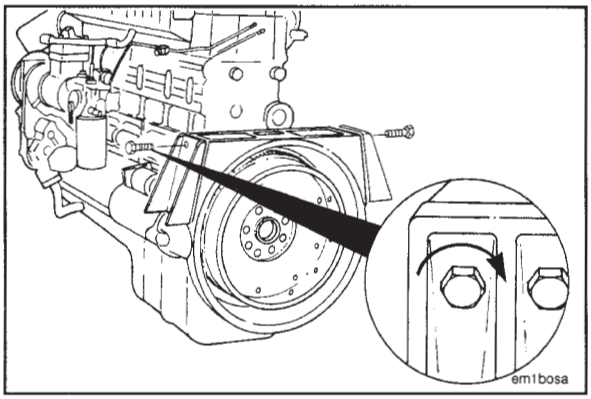

Crankshaft End Clearance

Checking

Measure the crankshaft end clearance with a dial indicator and make sure it meets the following specifications:

Crankshaft End Clearance Table		
New Minimum	New Maximum	Worn Limit
0.10 mm [0.004 inch]	0.45 mm [0.018 inch]	0.56 mm [0.022 inch]

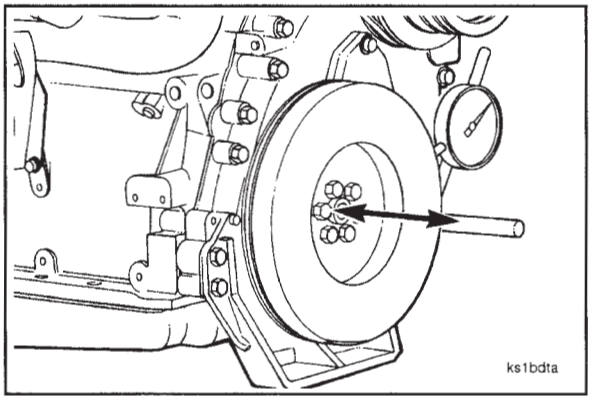

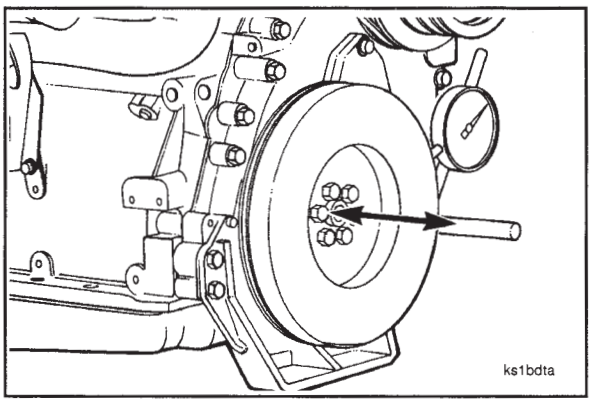

Caution: Extreme care MUST be used in prying against the viscous damper. Sharp pry bars can damage the damper casing, resulting in a leak of the viscous fluid and ultimate failure of the damper.

The check can be made by attaching an indicator to rest against the damper or pulley, while prying against the front cover and inner part of the pulley or damper. End clearance **must** be present with the engine mounted in the unit and assembled to the transmission or converter.

If the clearance is **not** within specifications, contact your Cummins Authorized Repair Location.

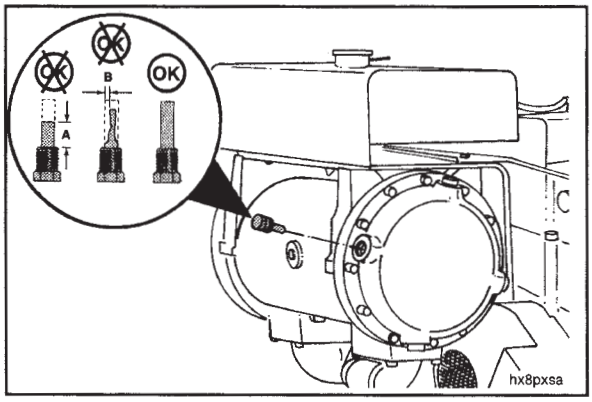

Heat Exchanger Zinc Plugs (Marine Only)

Checking

Check the length of all zinc plugs in the heat exchanger and change if they are 50 percent eroded. Frequency of change depends upon the chemical reaction of raw water circulated through the heat exchanger.

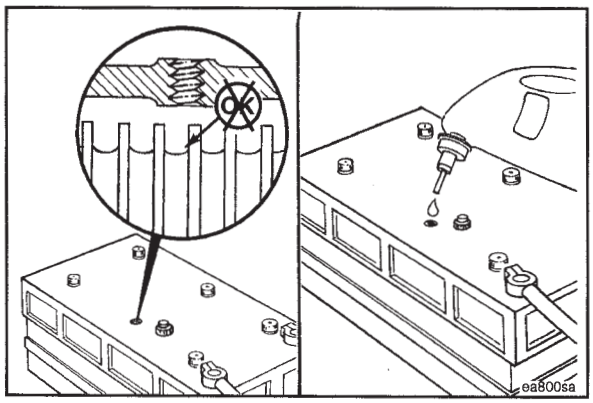

Batteries

Checking

If conventional batteries are used, remove the cell caps or covers and check the electrolyte (water and sulfuric acid solution) level.

NOTE: Maintenance-free batteries are sealed and do **not** require the addition of water.

Fill each battery cell with distilled water. Refer to the manufacturer's specifications.

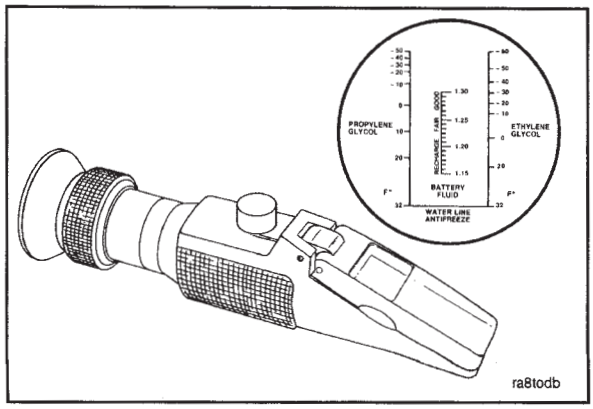

Use the Fleetguard® refractometer, Part No. CC-2800, to check the condition of the battery.

Refer to the battery fluid column in the refractometer to determine the state-of-charge of each battery cell.

Use battery tester, Part No. 3377193, to test the state-of-charge of maintenance-free batteries.

If the state-of-charge is low, use a battery charger to charge the battery. Refer to the manufacturer's instructions.

Replace the battery if it will **not** charge to the manufacturer's specifications or will **not** maintain a charge.

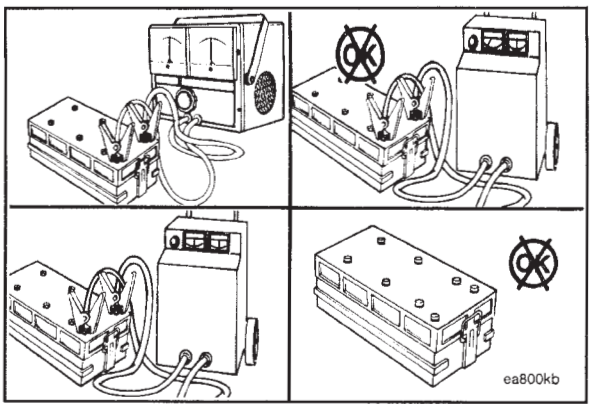

Turbocharger Mounting Nuts

Checking

Check the turbocharger mounting nuts annually.

Tighten the mounting nuts.

Torque Value: 48 N•m [35 ft-lb]

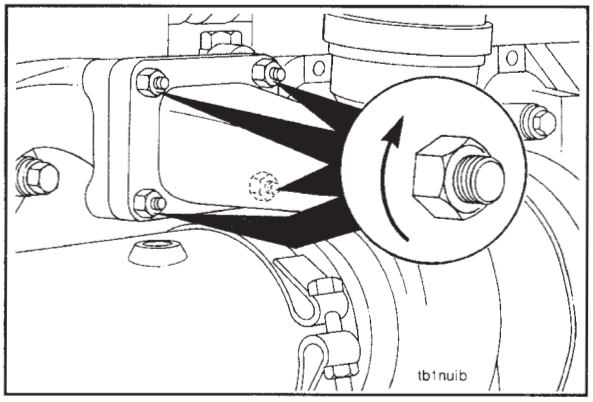

Check the v-band clamps annually. Tighten the clamps:

- Discharge/elbow
- Compressor housing
- Turbine housing

Torque Value: 8 N•m [75 in-lb]

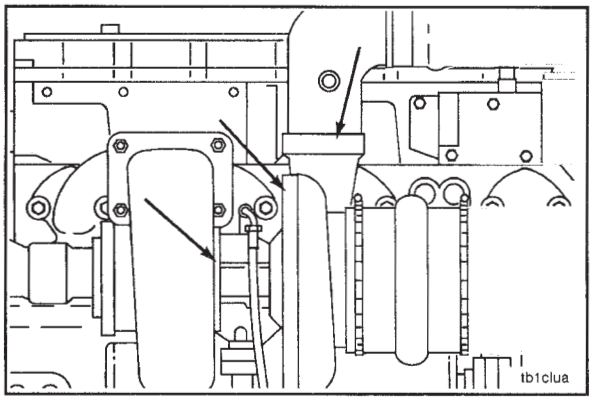

NOTES

Section 8 - Maintenance Procedures Every 6,000 Hours or 2 Years

Section Contents

Page

Air Compressor 8-19
Air Compressor Discharge-Inspection 8-19
Air Compressor Intake-Inspection 8-21
Inspection 8-19

Cooling System 8-14
Clean System and Replace Antifreeze/Water and DCA 8-14

Fan Hub (Belt Driven) 8-17
Inspection 8-17

Fuel Pump (Every 6000 Hours or 3 Years) 8-2
Cleaning and Calibration 8-2
Cleaning and Inspection 8-3
Installation 8-4
Removal 8-2

General Information 8-2

Idler Pulley 8-18
Inspection 8-18

Injectors (Every 6000 Hours or 3 Years) 8-5
Cleaning and Calibration 8-5

Injectors - Replacement (Every 6000 Hours or 3 Years) 8-5
Installation - PTD 8-9
Installation - STC 8-11
Removal - PTD 8-5
Removal - STC 8-7

Turbocharger 8-18
Inspection 8-18
Turbocharger Axial and Radial Clearance 8-18

Vibration Dampers 8-22
Rubber Vibration Dampers-Inspection 8-22
Viscous Vibration Dampers-Inspection 8-22

Water Pump 8-18
Inspection 8-18

General Information

All checks or inspections listed under the previous maintenance intervals **must** also be performed at this time in addition to those listed under this maintenance interval.

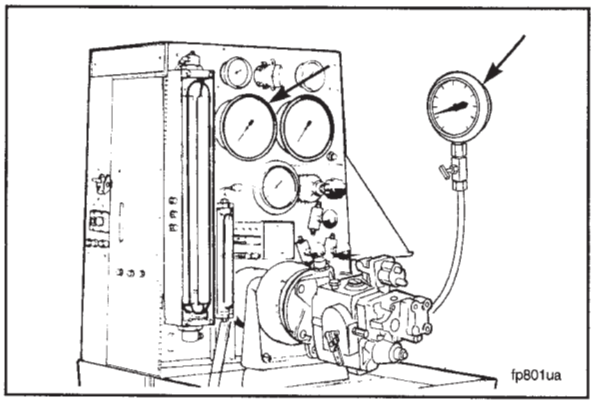

Fuel Pump

Cleaning and Calibration

Every 6,000 hours or 3 years clean and calibrate the fuel pump.

NOTE: This procedure requires special equipment and **must** be done at a Cummins Authorized Repair Location.

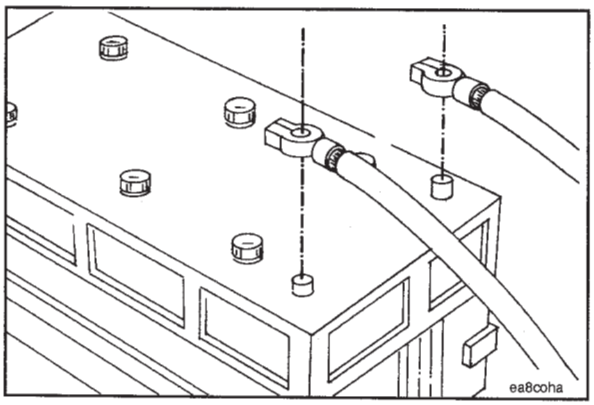

Removal

Disconnect the battery cables.

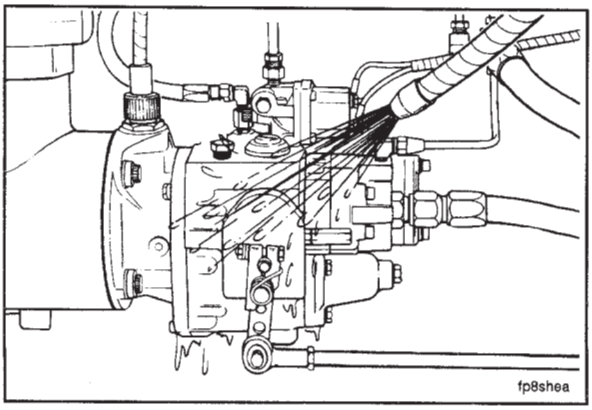

Clean the fuel pump and the surrounding area **before** removing it from the engine.

Disconnect the wires to the fuel shutoff valve.

Disconnect the linkage from the throttle lever.

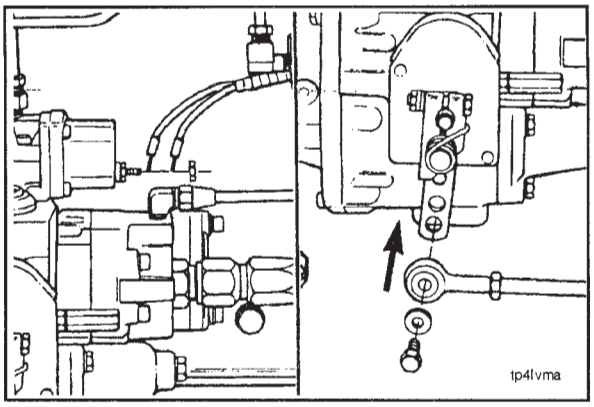

Disconnect the fuel tubing and air hose.

- Fuel drain (1).
- Gear pump cooling drain (2).
- Gear pump suction line (3).
- AFC air hose (4).
- Fuel supply to injectors (5).
- AFC fuel drain (6).
- Tachometer cable (7).

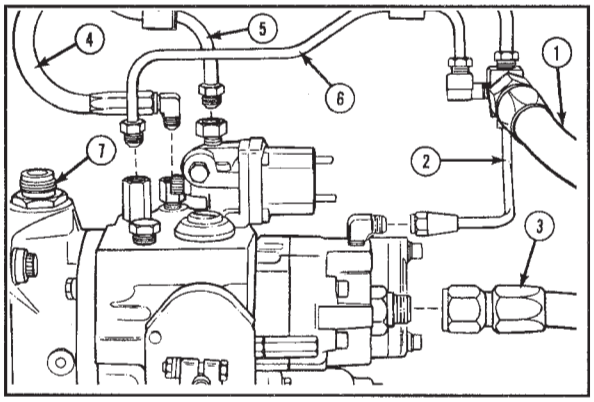

Remove the four mounting capscrews, and the fuel pump. Remove the drive coupling (23). Remove and discard the gasket.

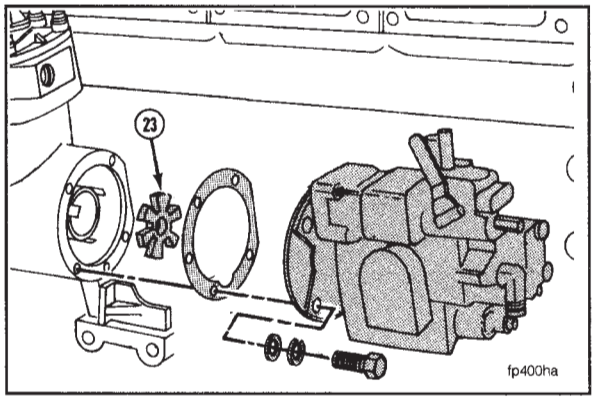

Cleaning and Inspection

Clean the fuel pump and the air compressor or accessory drive mounting surfaces.

Inspect the mounting surfaces for damage.

Take the fuel pump to a Cummins Authorized Repair Location for calibration.

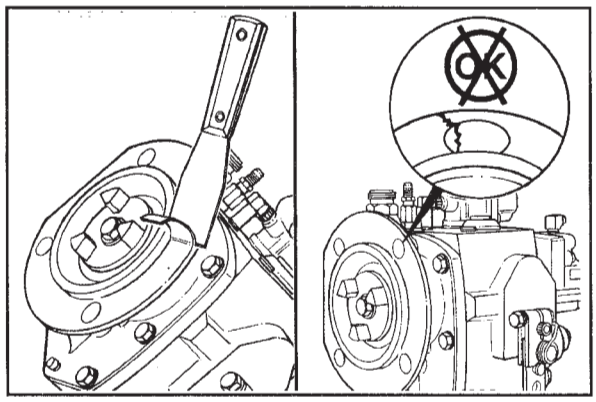

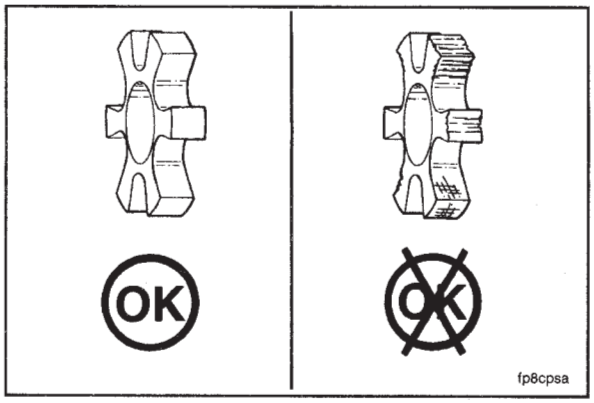

Visually inspect the spider coupling for damage.

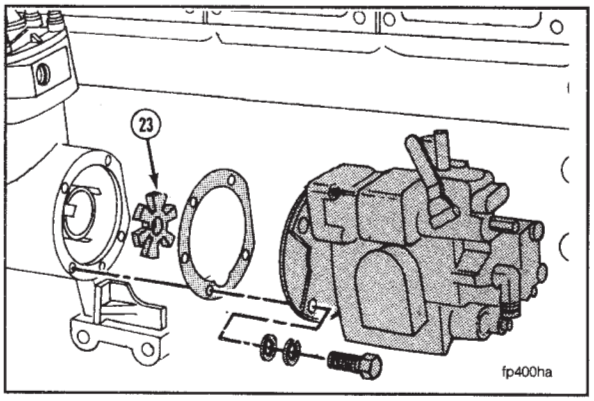

Installation

NOTE: All NT engines use a white nylon or light green fuel pump drive coupling.

Install the drive coupling (23), gasket, fuel pump, and four capscrews. Tighten the capscrews.

Torque Value: 45 N•m [35 ft-lb].

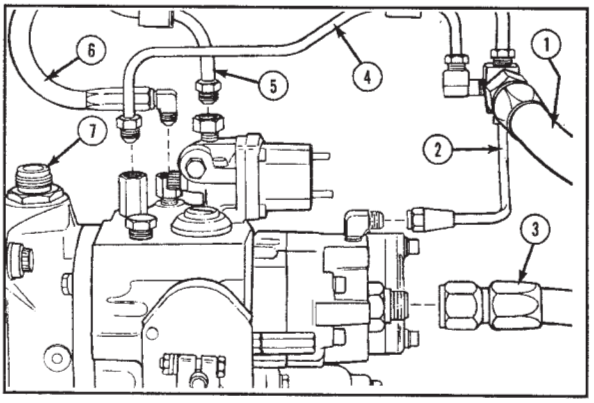

Connect the fuel tubing and air hose.

- Fuel drain (1).
- Gear pump cooling drain (2).
- Gear pump suction line (3).
- AFC fuel drain (4).
- Fuel supply to the injectors (5).
- AFC air hose (6).
- Tachometer cable (7).

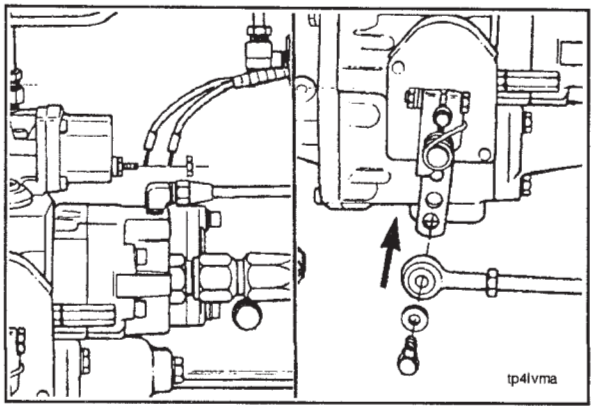

Connect the electric wires to the fuel shutoff valve.

NOTE: The wire connection nut and the ground post nut **must** be clean and tight.

Install the linkage to the throttle lever.

Connect the battery cables.

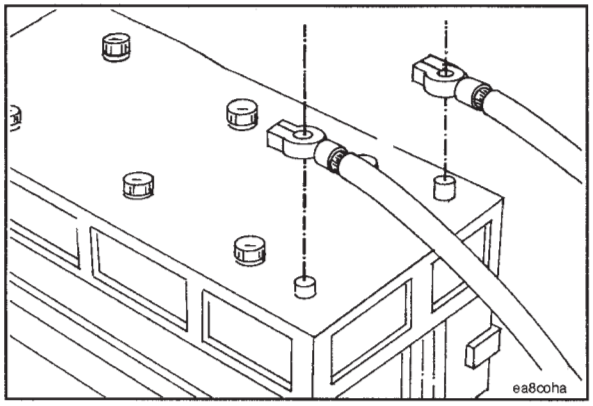

Operate the engine to normal operating temperature and check for leaks.

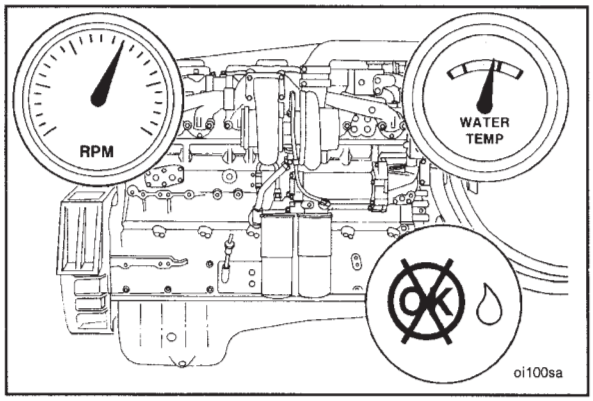

Injectors

Cleaning and Calibration

Every 6,000 hours or 3 years clean and calibrate the injectors.

NOTE: This procedure requires special equipment and **must** be done at a Cummins Authorized Repair Location.

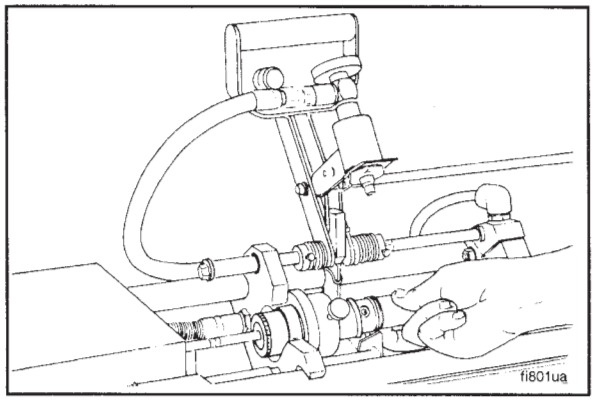

Injectors - Replacement

Removal - PTD

To clean and calibrate the injectors, remove them from the engine. The injectors **must** be calibrated on an injector test stand. Refer to Bulletin No. 3379071 - Rebuild Manual; Injectors PT (all types), or Bulletin No. 3810344 - Shop Manual PT (Type D) Top Stop Injector, for rebuild and calibration procedures.

Remove the rocker lever cover assembly.

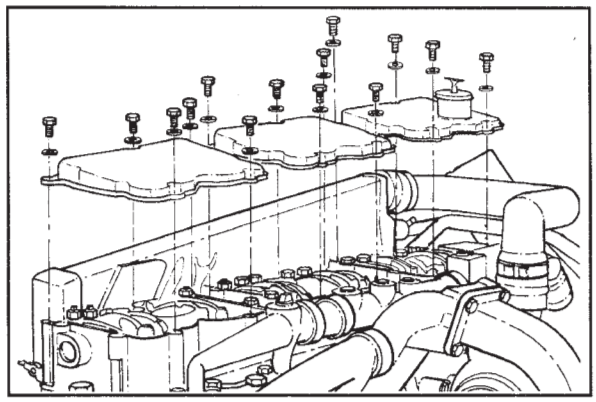

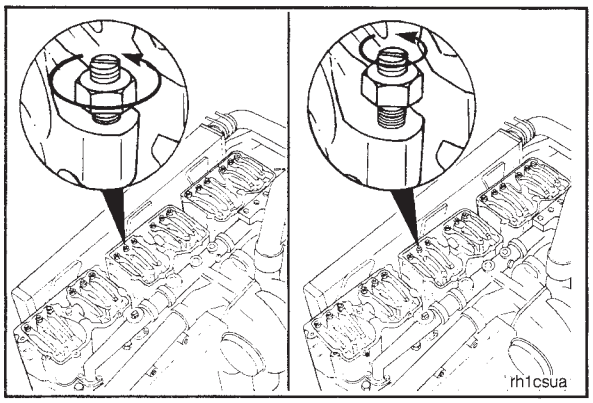

Loosen the adjusting screw lock nut on each injector rocker lever.

Turn out the adjusting screw on each injector rocker lever.

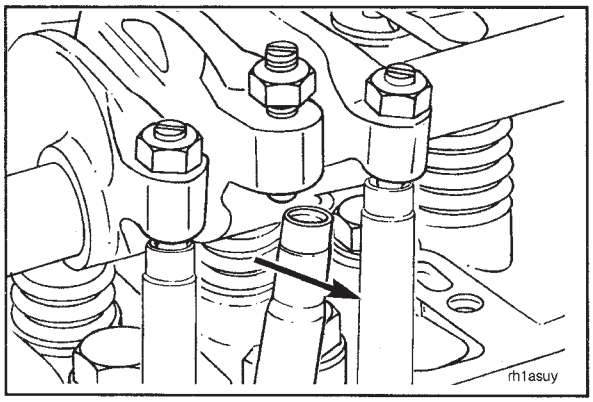

Move the injector push rods to the side.

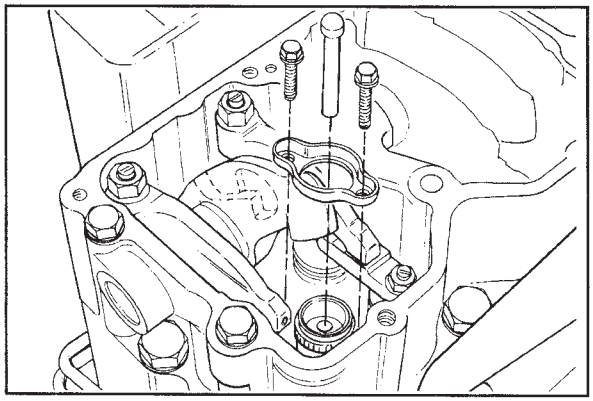

Rotate the injector rocker levers up on each cylinder.

Remove the injector link.

Remove the hold down clamp capscrews and the injector hold down clamp.

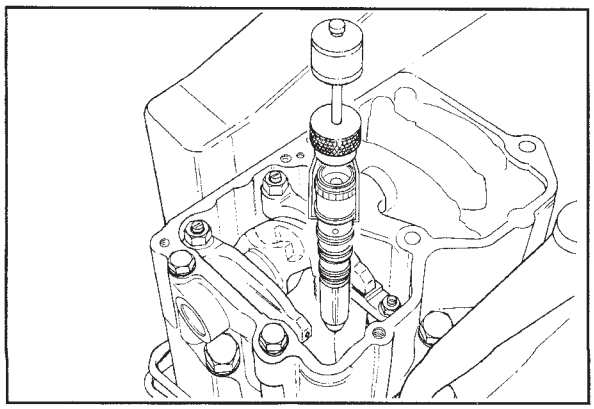

Caution: Do not drop or damage the injector plunger.

Use Part No. 3376872, Injector Puller, to remove the injectors.

- Take the injectors to a Cummins Authorized Repair Location.

Use a clean wooden stick with a clean cloth wrapped around the end to remove all of the carbon from the injector copper sleeves in the cylinder head.

Caution: Do not use anything metal to scrape the injector copper sleeve.

NOTE: Use ST-1272-11 Chip Removing Unit to remove the carbon from the top of the piston.

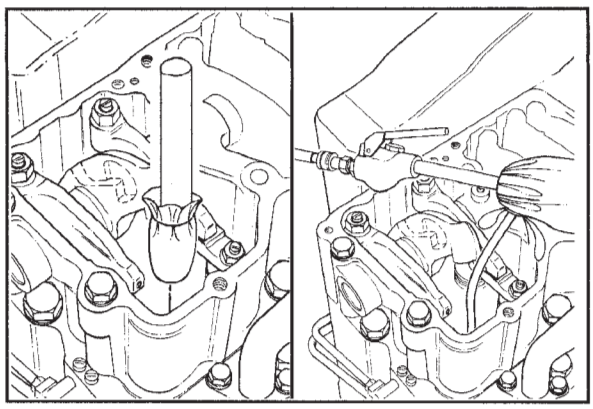

Removal - STC

To clean and calibrate the injectors, remove them from the engine. The injectors **must** be calibrated on an injector test stand. Refer to Bulletin No. 3810313 - Shop Manual PT (Type D) Step Timing Control Injector, for rebuild and calibration procedures.

Remove the rocker lever cover assembly.

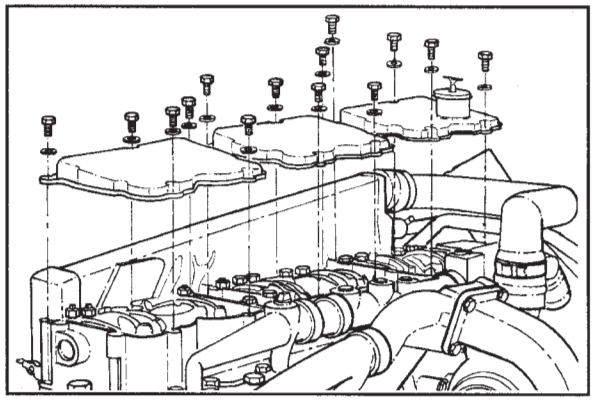

Loosen the adjusting screw lock nut on each injector rocker lever.

Turn out the adjusting screw on each injector rocker lever.

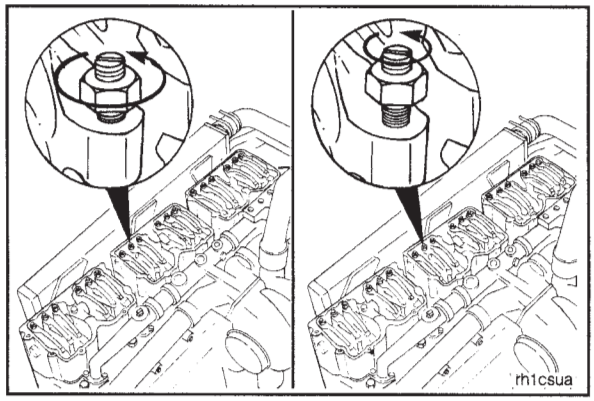

Loosen the adjusting screw lock nut on each exhaust valve rocker lever.

Turn out the adjusting screw on each exhaust valve rocker lever.

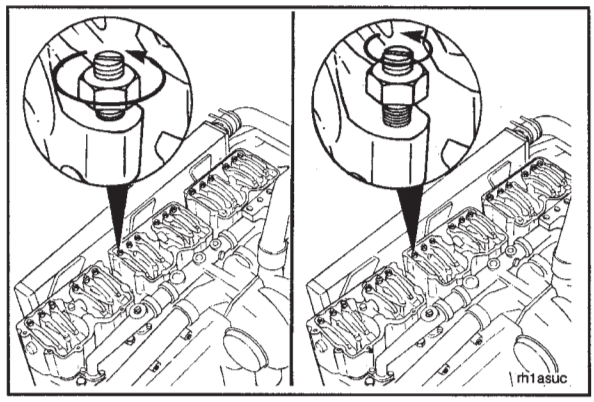

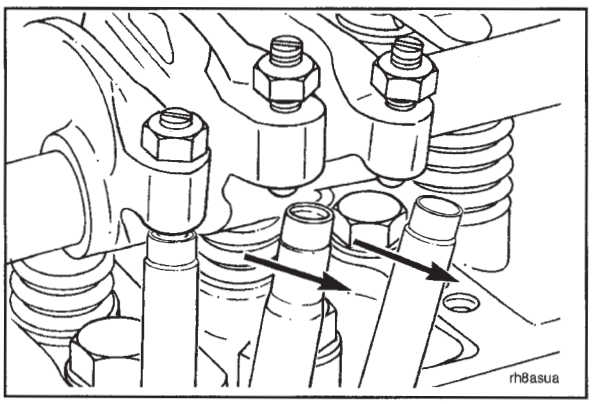

Move the injector and exhaust valve push rods to the side.

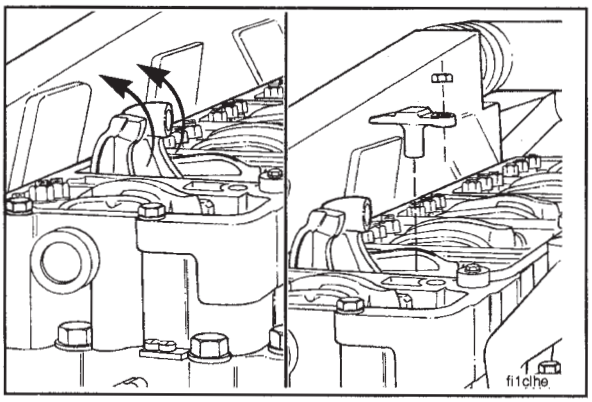

Rotate the injector and exhaust valve rocker levers up on each cylinder.

Caution: Do not remove the links from the STC injectors.

Remove the exhaust valve crosshead.

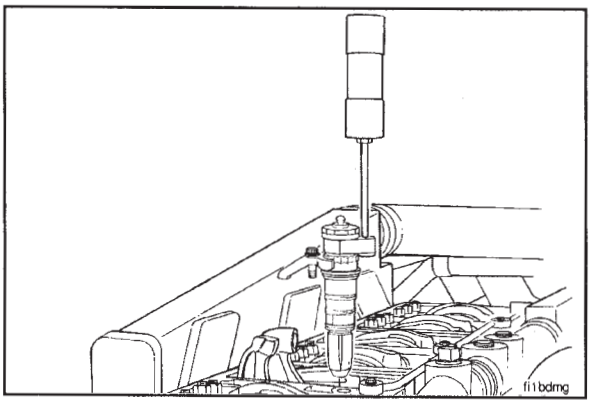

Loosen the injector hold down capscrew.

NOTE: The injector hold down clamp and capscrew **must** be removed with the injector.

Use Part No. 3822697, Injector Puller, to remove the injector.

- Insert the threaded end of the puller into the tapped hole in the STC oil feed lock nut. Remove the injectors.
- Take the injectors to a Cummins Authorized Repair Location.

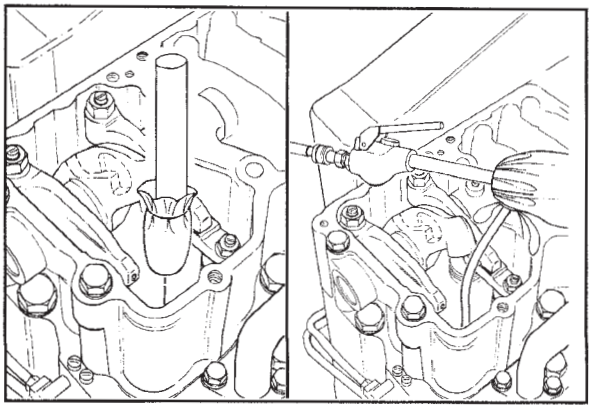

Caution: Do not use anything metal to scrape the copper injector sleeves.

Use a clean wooden stick with a clean cloth wrapped around the end to remove all the carbon from the copper injector sleeves in the cylinder head.

NOTE: Use ST-1272-11 Chip Removing Unit to remove the carbon from the top of the piston.

Installation - PTD

Install the three new o-rings on each injector.

Lubricate the o-rings with lubricating oil just before installation.

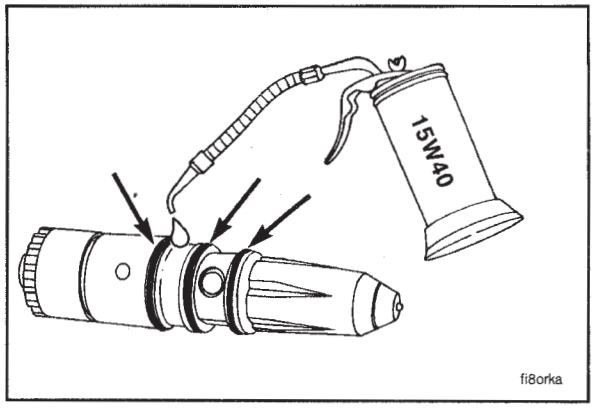

Install the injector in the cylinder head injector bore.

NOTE: The injector **must** be carefully installed by hand. After the injector is in the bore, push firmly down on the injector to start it into the bore.

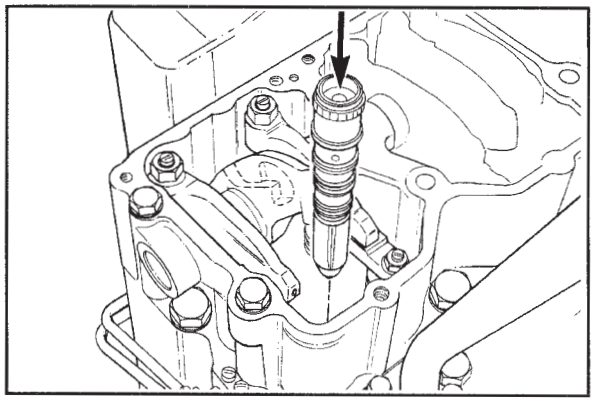

Use a clean, blunt instrument to seat the injector in the bore.

Caution: Be sure to place the instrument on the body of the injector and not on the plunger or link.

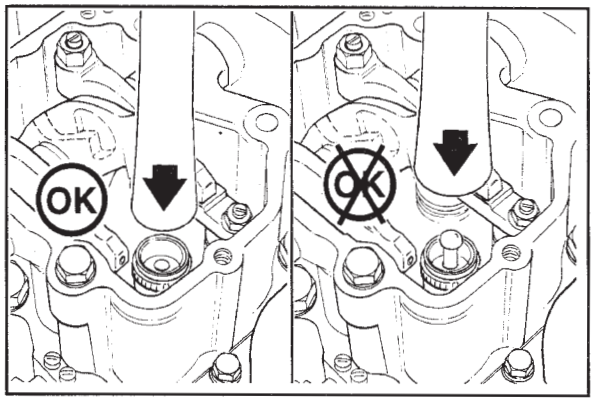

A "snap" will be heard and felt as the injector is seated.

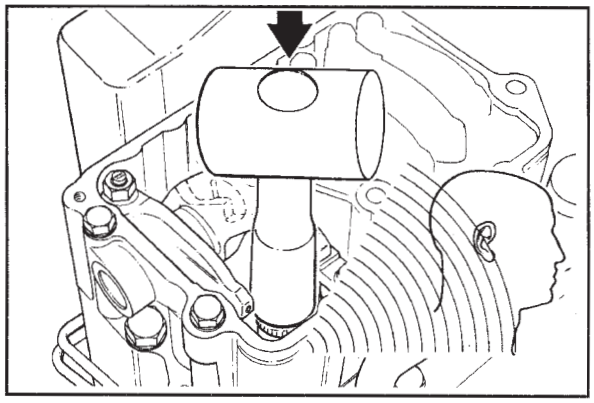

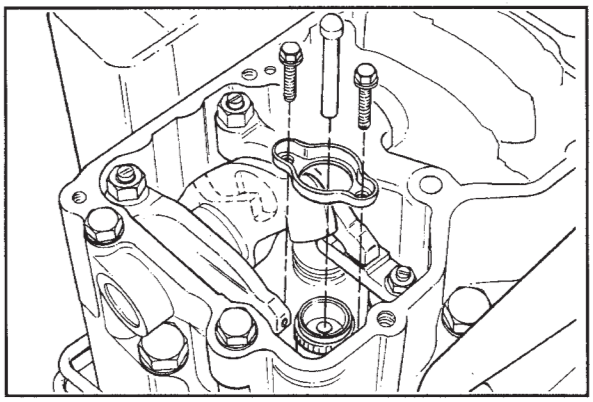

NOTE: Use an air gun to blow the oil from the hold down capscrew holes in the head.

Install the hold down clamp and capscrews over the injector body.

Install the injector link in each injector.

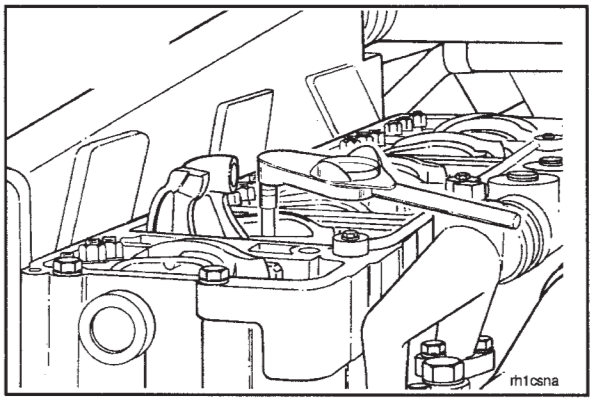

For engines with 5/16 inch - 18 capscrews, tighten the capscrews alternately and evenly, 6 N•m [48 in-lb] torque one at a time.

Torque Value: 17.6 N•m [156 in-lb]

For engines with 3/8 inch - 16 capscrews, tighten the capscrews alternately and evenly, 11 N•m [8 ft-lb] torque one at a time.

Torque Value: 34 N•m [25 ft-lb]

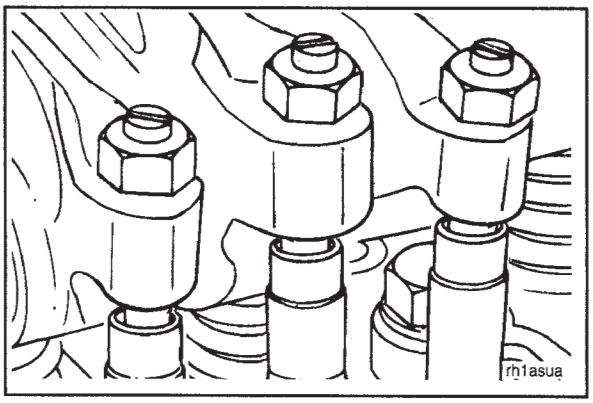

Rotate the injector rocker lever down on each cylinder.

Align the push rods with each injector and exhaust valve rocker lever.

Caution: Do not drop the push rods.

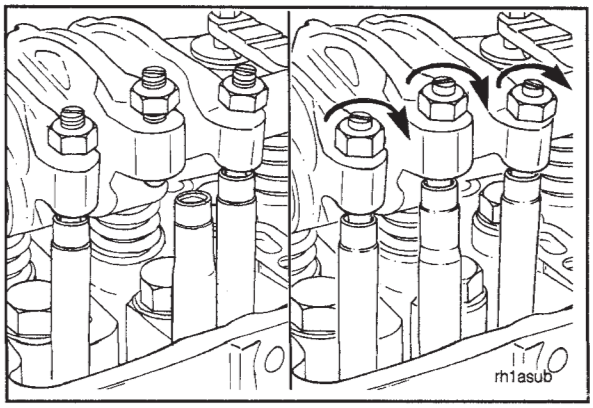

Turn the adjusting screw for the injector rocker lever in until it is properly seated in the push rod socket.

Adjust all crossheads, valves, and injectors. Refer to Section 6.

Install the rocker lever cover.

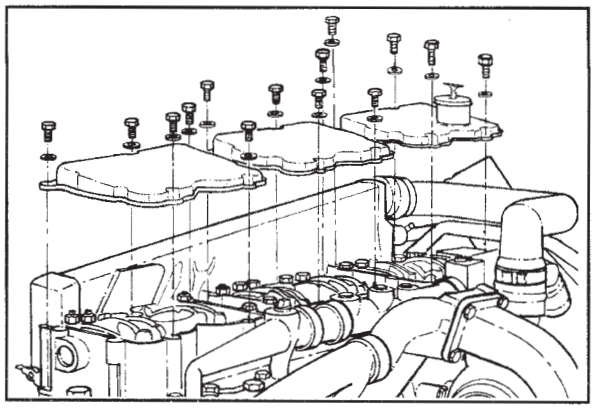

Installation - STC

Install the three new o-rings on each injector.

Lubricate the o-rings with lubricating oil just before installation.

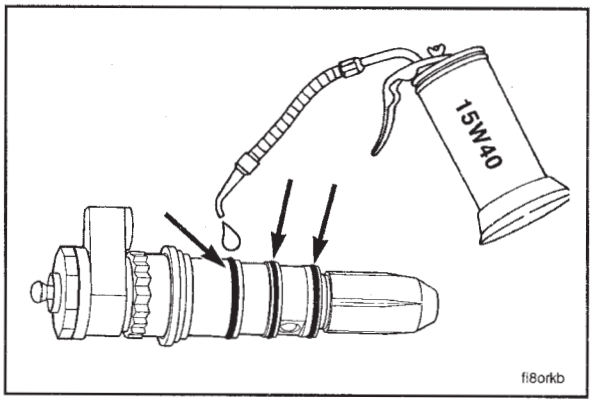

Install a new o-ring on the STC oil connection block.

Lubricate the o-ring with vegetable oil.

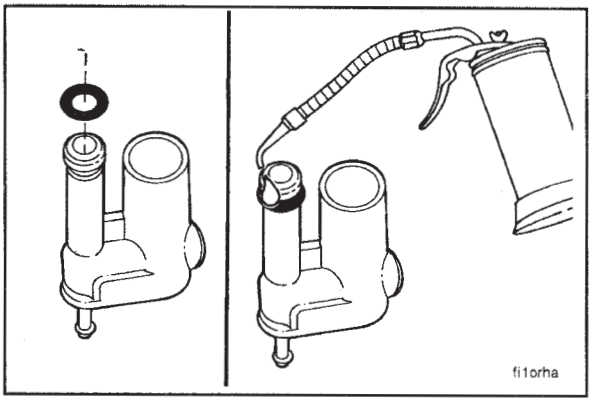

NOTE: Install the grommet and the STC oil connection.

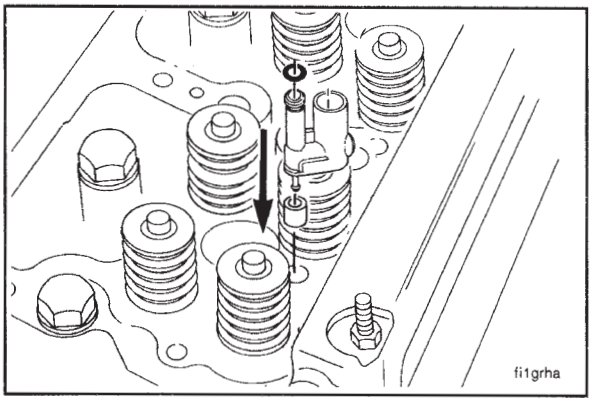

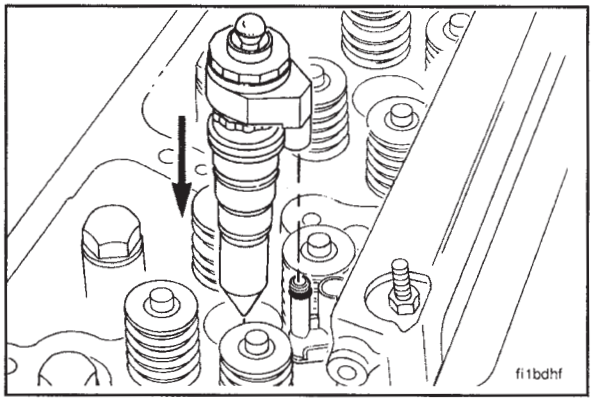

Align the oil hole on the tappet top stop lock nut with the oil supply tube on the STC oil connection block.

NOTE: Use an air gun to blow the oil from the hold down capscrew holes in the head.

Install the injector hold down, hold down capscrew and injector into the cylinder head injector bore.

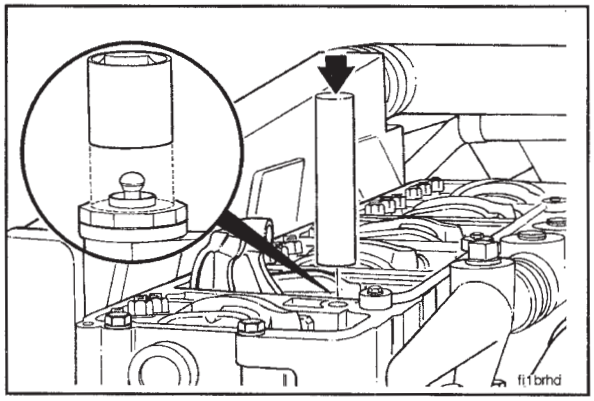

Install a deep well socket over the top link of the injector. Use a blunt instrument to seat the injector in the bore.

Caution: Be sure to place the instrument on the socket or the body of the injector, not on the plunger or link.

Use the largest socket which will still rest completely on the top surface of the injector.

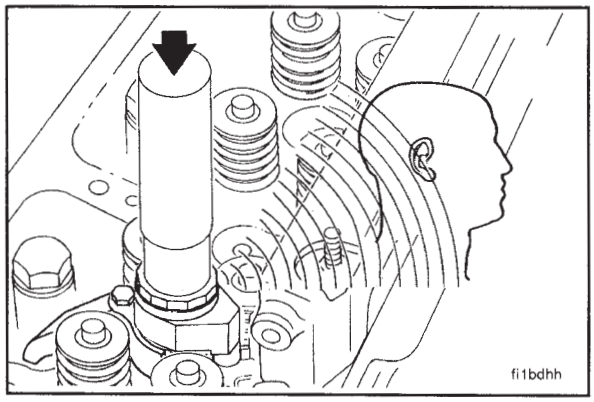

A ''snap'' will be heard and felt as the injector is seated.

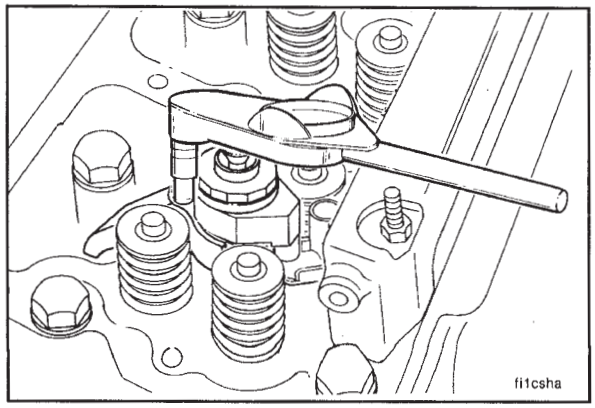

Tighten the capscrew.

Torque Value: 54 N•m [40 ft-lb]

Install the exhaust valve crosshead.

Rotate the exhaust valve rocker lever down on each cylinder.

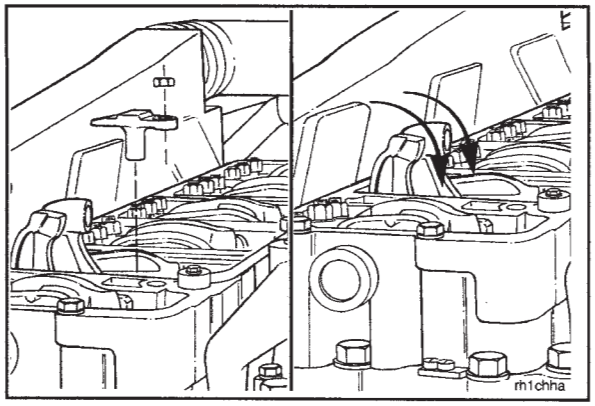

Rotate the injector rocker lever down on each cylinder.

Align the push rods with the injector and exhaust valve rocker levers.

Caution: Do not drop the push rods.

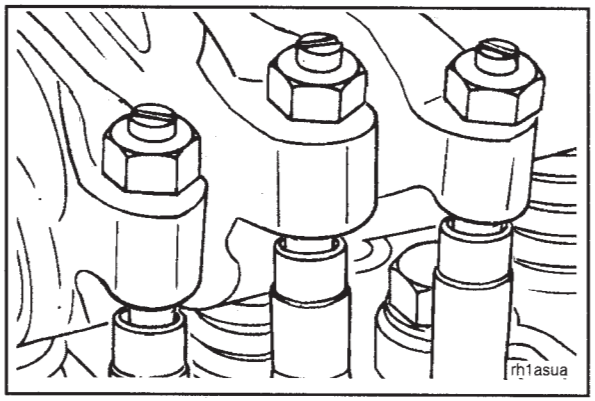

Turn the adjusting screw for the injector and exhaust rocker lever in until it is properly seated in the push rod socket.

Adjust all crossheads, valves, and injectors. Refer to Section 6.

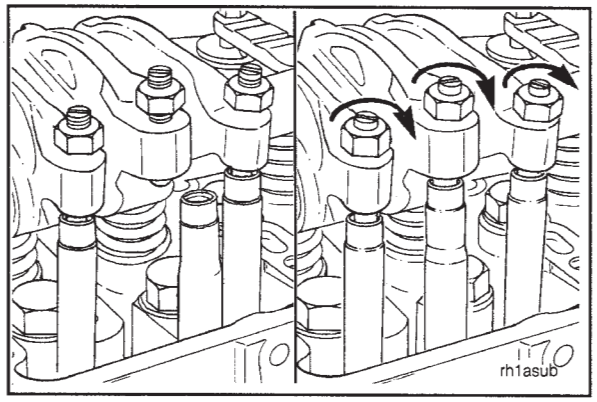

Install the rocker housing cover gasket.

Install the rocker lever cover.

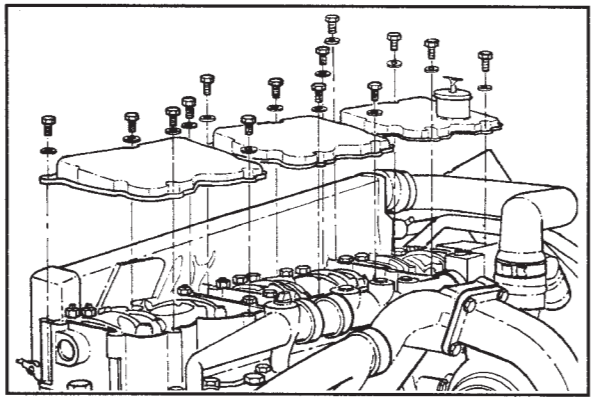

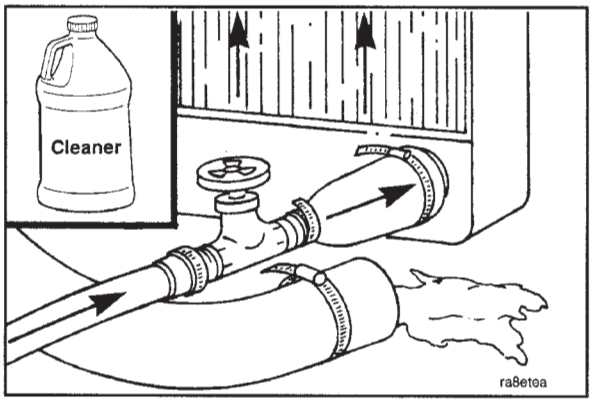

Cooling System

Clean System and Replace Antifreeze/Water and DCA

Caution: Do not use caustic cleaners in the cooling system. Aluminum components will be damaged.

Drain and flush the cooling system after 2 years or 6000 hours of service. Refill with new **heavy duty coolant** and install the **correct service coolant filter**.

The cooling system **must** be clean to work correctly and to eliminate buildup of harmful chemicals

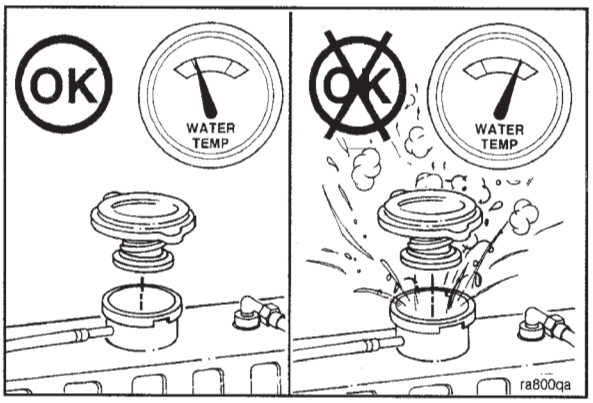

Warning: Wait until the temperature is below 50°C [120°F] before removing the coolant system pressure cap. Failure to do so can cause personal injury from heated coolant spray.



NOTE: The performance of RESTORE is dependent on time, temperature, and concentration levels. An extremely scaled or flow restricted system, for example, may require higher concentrations of cleaners, higher temperatures, or longer cleaning times or the use of RESTORE PLUS. RESTORE can be safely used up to twice the recommended concentration levels. RESTORE PLUS **must** be used only at its recommended concentration level. Extremely scaled or fouled systems may require more than one cleaning.

RESTORE	CC2610	(1 gallon)
RESTORE	CC2611	(5 gallons)
RESTORE	CC2612	(55 gallons)
RESTORE PLUS	CC2638	(1 gallon)

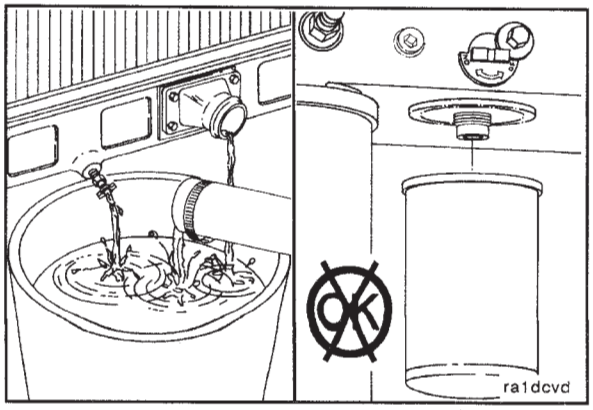

NOTE: Engine coolant and RESTORE **must** be disposed of in a responsible manner. Please consult the local environmental agency for recommended disposal guidelines.

Drain the cooling system. Do **not** allow the cooling system to dry out. RESTORE will **not** be as effective if the cooling system is allowed to dry.

Do **not** remove the coolant filter.

NOTE: If the coolant is **not** going to be reused, dispose of used coolant/antifreeze in accordance with federal, state, and local laws and regulations.

Caution: Fleetguard® RESTORE contains no antifreeze. Do not allow the cooling system to freeze during the cleaning operation.

Immediately add 3.8 liters [1 U.S. gallon] of Fleetguard® RESTORE, RESTORE PLUS (or equivalent), for each 38 to 57 liters [10 to 15 gallons] of cooling system capacity, and fill the system with plain water.

Turn the heater temperature switch to high to allow maximum coolant flow through the heater core. The blower does **not** have to be on.

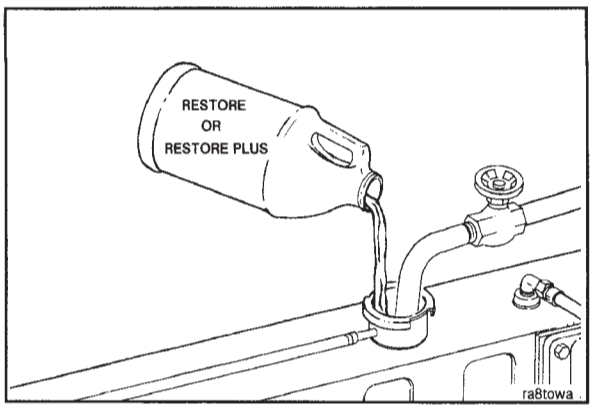

Operate the engine at normal operating temperatures (at least 85°C [185°F] for 1 to 1 1/2 hours.

Shut the engine off, and drain the cooling system.

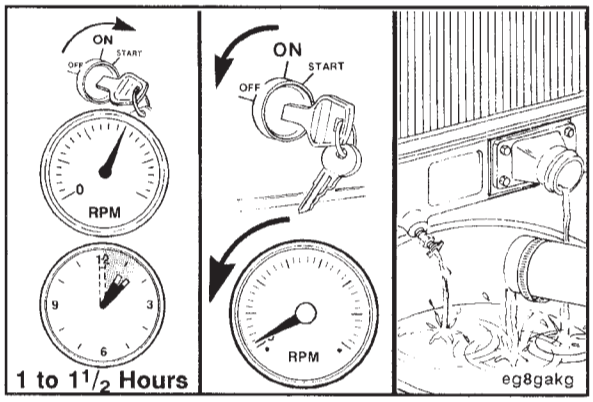

Fill the cooling system with clean water to flush the cooling system.

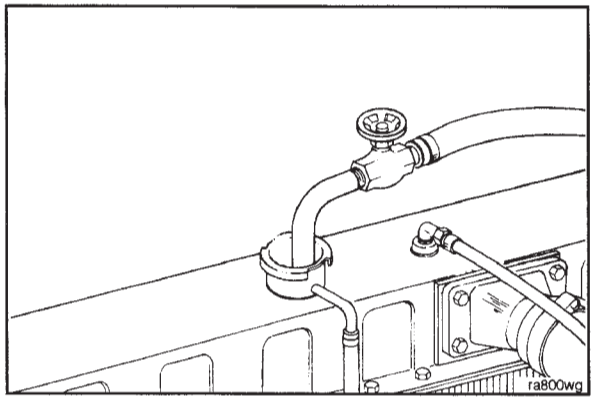

Operate the engine at high idle for 5 minutes with the coolant temperature above 85°C [185°F].

Shut the engine off, and drain the cooling system.

NOTE: If the water being drained is still dirty, the system **must** be flushed again until the water is clean.

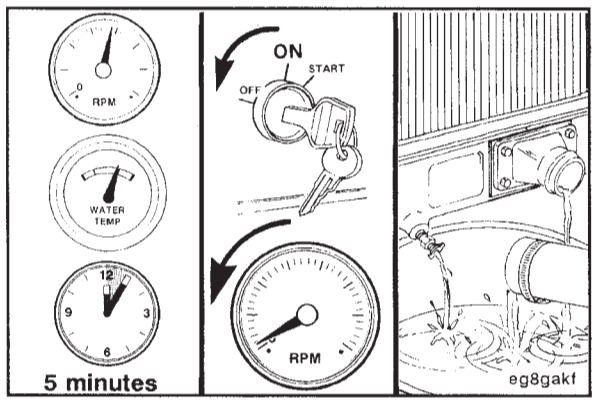

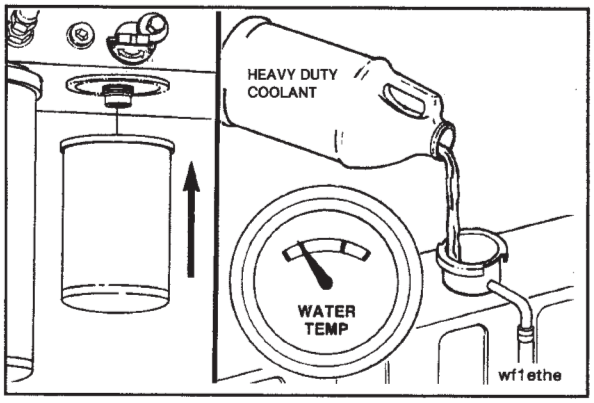

Fill the cooling system with heavy duty coolant. Heavy duty coolant is defined as a correct mixture of good quality water, low silicate antifreeze, and supplemental coolant additives (SCA's). Refer to Section V for the correct way to mix up heavy duty coolant. Install the correct service filter. Refer to the DCA4 Service Filter Selection Chart in Section V.

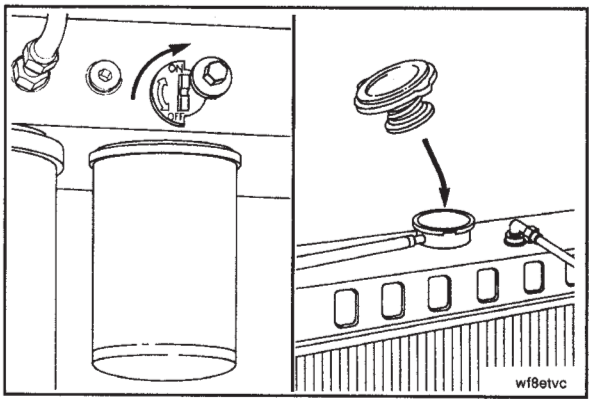

Open the shut-off valve and install the coolant system pressure cap.

Caution: Engine damage will result if the valve is left closed.

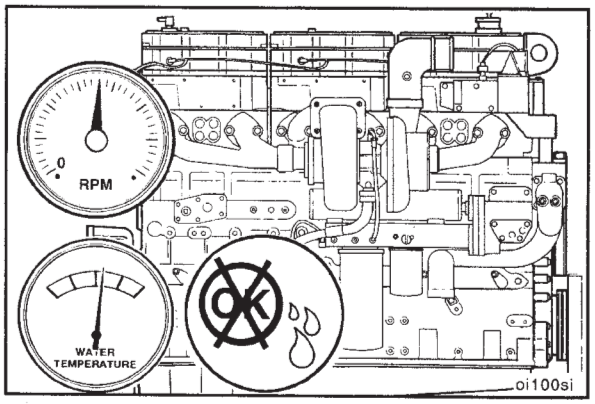

Operate the engine until it reaches a temperature of 80°C [180°F], and check for coolant leaks.

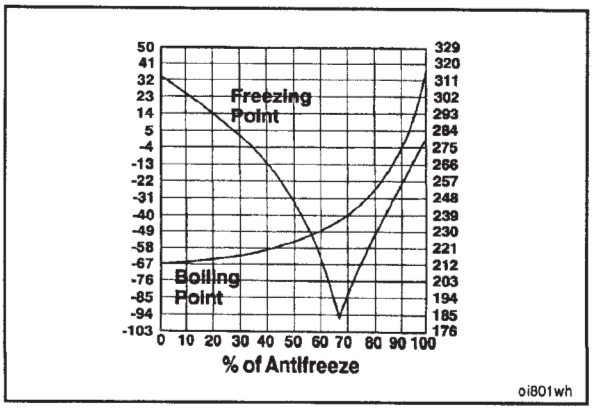

Low-silicate antifreeze **must** be mixed with quality water at a 50/50 ratio (40 to 60% working range). A 50/50 mixture of antifreeze and water gives a -34°F freeze point and a boiling point of 228°F, which is adequate for locations in North America. The actual lowest freeze point of ethylene glycol antifreeze is at 68%. Using higher concentrations of antifreeze will raise the freeze point of the solution and increase the possibility of a silicate gel problem.

Refer to Section V for Coolant Recommendations/ Specifications.

The Fleetguard® refractometer, Part No. C2800, provides a reliable and easy to read measurement of freeze point protection and glycol (antifreeze) concentration.

The freeze point protection **must** be checked if coolant is added to the cooling system. Refer to the manufacturer's instructions for correct operation.

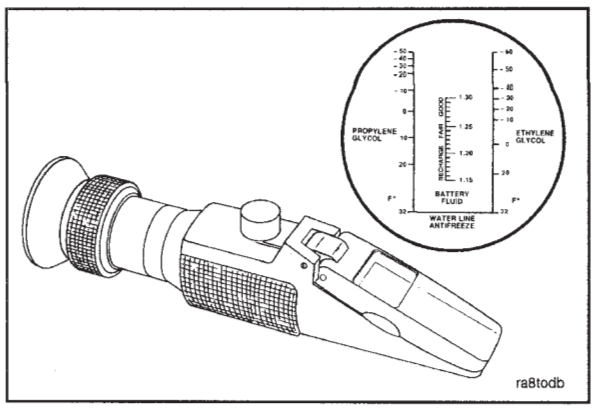

Using floating ball hydrometers will give incorrect readings.

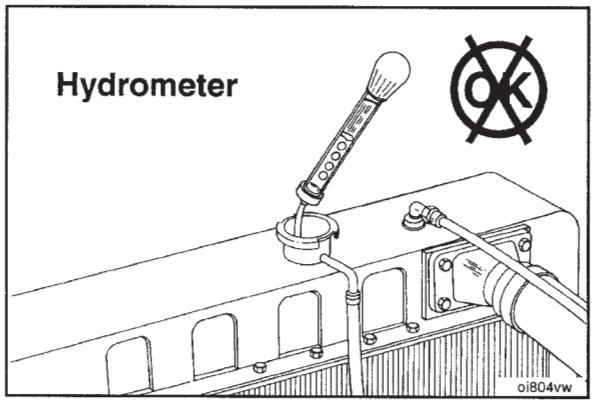

Fan Hub (Belt Driven)

Inspection

Every 6,000 hours or 2 years inspect the fan hub for the following:

- Freedom of rotation
- Cracks
- Grease seal leakage

Repair or replace the fan hub if the fan hub does **not** rotate freely or if there is evidence of cracks or grease seal leakage.

Refer to the Troubleshooting and Repair Manual for removal and replacement instructions.

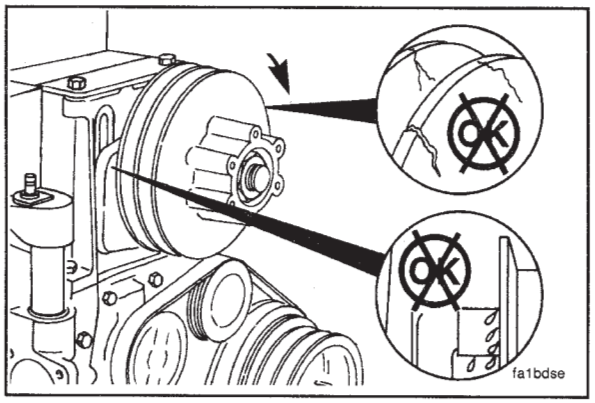

Measure the fan hub ***end clearance.*** Fan hubs with ''step-bore'' shafts and no bearing spacers **must** be 0.08 mm to 0.25 mm [0.003 inch to 0.010 inch] end clearance.

Fan hubs with ''through-bore'' shafts with inner and outer bearing spacers **must** be 0.08 mm to 0.41 mm [0.003 inch to 0.016 inch] end clearance.

Replace the fan hub if the end clearance is **not** within these specifications. Refer to the Troubleshooting and Repair Manual for removal and replacement instructions.

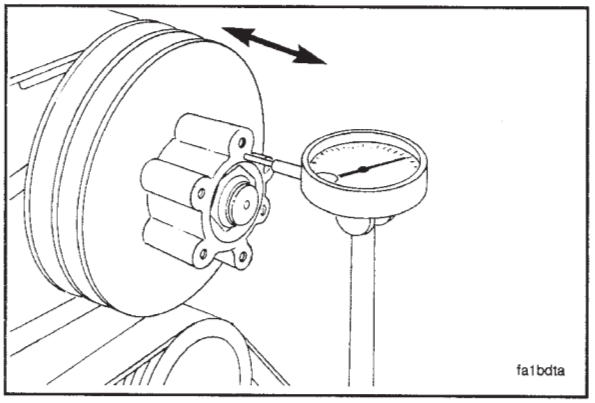

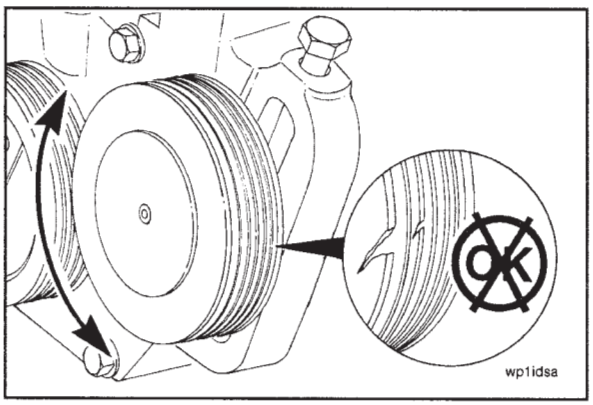

Idler Pulley

Inspection

Every 6,000 hours or 2 years inspect the water pump idler pulley assembly for the following:

- Freedom of rotation
- Cracked, chipped or broken pulley grooves.

Repair or replace the idler pulley assembly if it does **not** rotate freely or if damage is found. Refer to the Troubleshooting and Repair Manual for removal and replacement procedures.

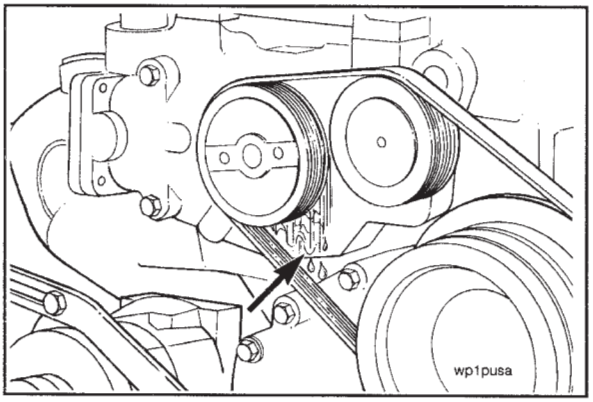

Water Pump

Inspection

Every 6,000 hours or 2 years (whichever comes first), visually inspect the water pump body for indications of water leakage at the weep hole. The water pump seal design requires a coolant film for lubrication and cooling. Therefore, it is normal to observe a minor chemical buildup or streaking at the weep hole.

NOTE: A streak or chemical buildup is **not** justification for water pump replacement. If a continuous water leak, i.e., a stream or drip is indicated, replace the water pump with a new or rebuilt unit as necessary. Refer to the Troubleshooting and Repair Manual for removal and replacement instructions.

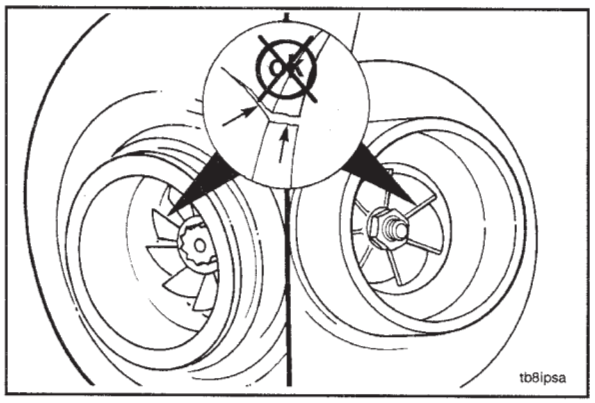

Turbocharger

Inspection

Inspect the turbocharger every 6,000 hours or 2 years. Remove the air intake and the exhaust piping. Check the turbocharger as follows:

- Look for damaged or cracked compressor or turbine blades. Check to see that the turbocharger shaft spins freely.

NOTE: If visual inspections or dimensional checks indicate a problem, contact a Cummins Authorized Repair Location for assistance. Refer to the model number on the turbocharger dataplate.

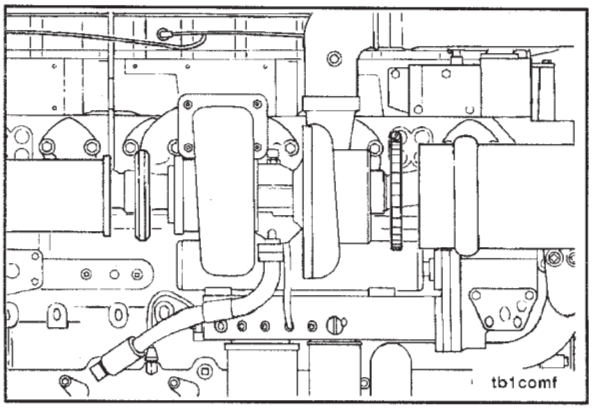

Turbocharger Axial and Radial Clearance

Remove the intake and the exhaust piping from the turbocharger.

Use a narrow width feeler gauge to measure the radial clearance (side to side).

NOTE: Hold the shaft toward the feeler gauge to check this dimension.

Rebuild or replace the turbocharger if the radial clearance is greater than specified. Refer to the Troubleshooting and Repair Manual for removal procedures. Refer to the Turbocharger Rebuild Manual for rebuild procedures.

Radial Clearance (Side to Side)

Turbocharger Model No.	Dimension Minimum	Dimension Maximum
BHT3C		
Compressor Impeller	0.18 mm [0.007 in.]	0.46 mm [0.018 in.]
Turbine Wheel	0.25 mm [0.010 in.]	0.53 mm [0.021 in.]

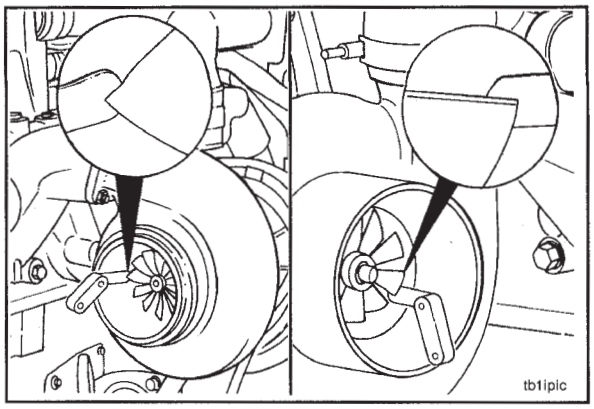

Measure axial clearance (end to end), using dial depth gauge, Part No. ST-537.

Rebuild or replace the turbocharger if axial clearance is greater than specified. Refer to the Troubleshooting and Repair Manual for removal procedures. Refer to the Turbocharger Rebuild Manual for rebuild procedures.

Turbocharger Model No.	Dimension Minimum	Dimension Maximum
BHT3C	0.03 mm [0.001 in.]	0.10 mm [0.004 in.]

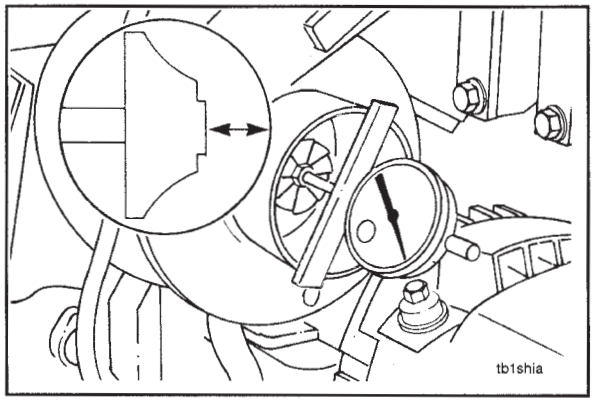

Air Compressor

Inspection

Complete air compressor inspection is required every 6,000 hours or 2 years.

NOTE: All air compressors have a small amount of oil carryover which lubricates the piston rings and moving parts. When this oil is exposed to normal air compressor operating temperatures over a period of time, it will form varnish or carbon deposits. If the following inspections are **not** done, the air compressor piston rings will be affected by high operating temperatures and pressures, and will **not** seal correctly.

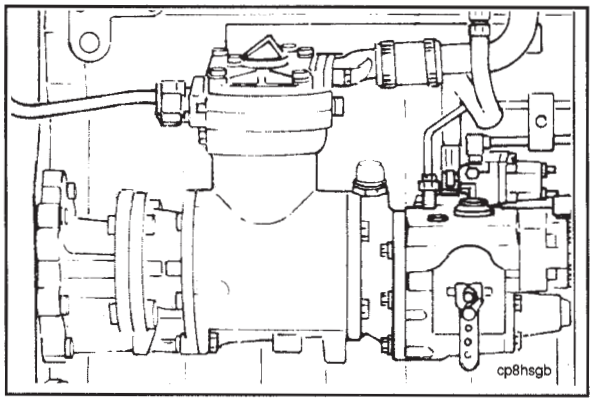

Air Compressor Discharge-Inspection

Drain the air system wet tank to release the system air pressure. Remove the air discharge line from the air compressor.

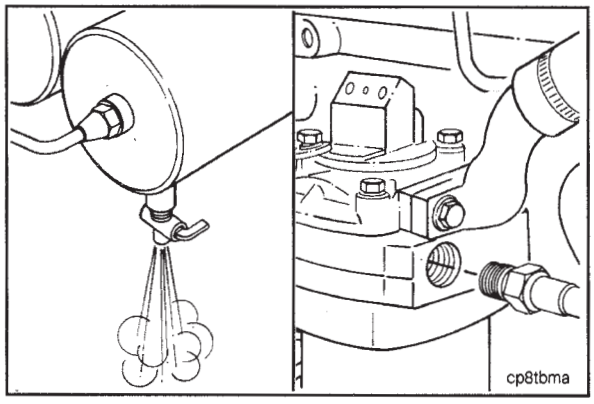

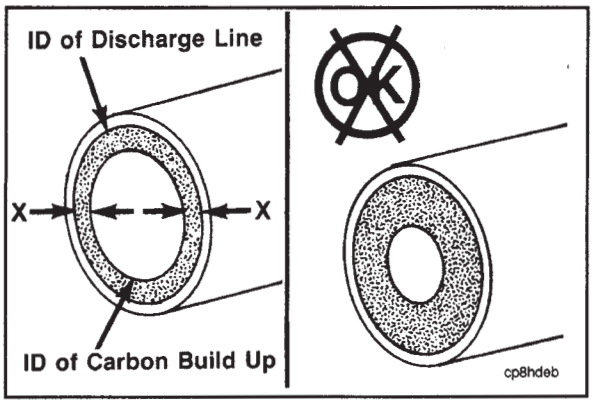

Measure the total carbon deposit thickness inside the air discharge line as shown. If the total carbon deposit (X + X) exceeds 2 mm [1/16 inch], clean and inspect the cylinder head, the valve assembly, and the discharge line. Replace if necessary. Refer to the appropriate Air Equipment Manual listed below for procedures, or contact your Cummins Authorized Repair Location:

- Single Cylinder Air Compressor, Bulletin No. 3810242
- SS338E Single Cylinder Air Compressor, Bulletin No. 3810457
- ST676 Two Cylinder Air Compressor, Bulletin No. 3810257.
- ST773 Two Cylinder Air Compressor, Bulletin No. 3810347.

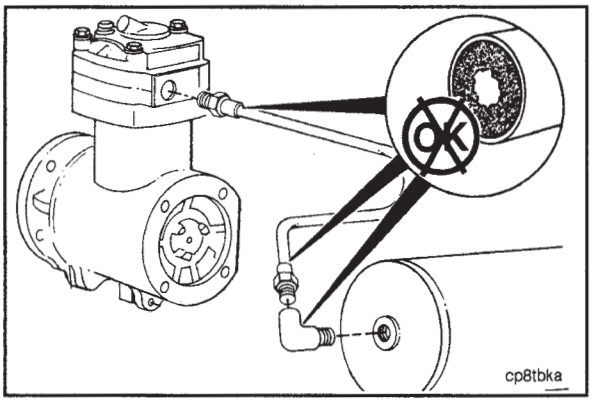

If the total carbon deposit exceeds specifications, continue checking the air discharge line connections, up to the first tank, until total carbon deposit is less than 2 mm [1/16 inch]. Clean or replace any lines or connections that exceed this specification.

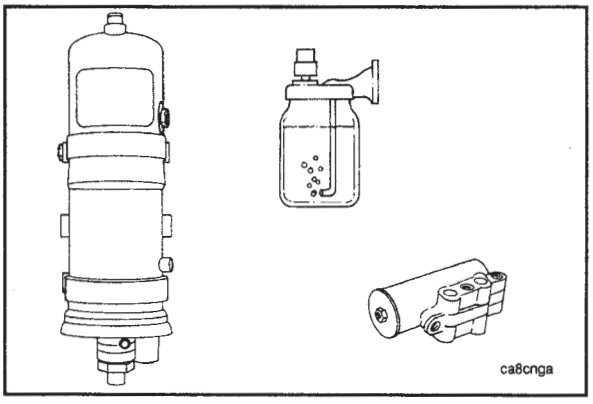

Inspect any air driers, spitter valves, pressure relief valves, alcohol injectors, and the air governor for carbon deposits or malfunctioning parts. Inspect for air leaks. Maintain and repair the parts according to the manufacturer's specifications.

Air Compressor Intake-Inspection

Warning: Hold the unloader valve down when removing the capscrews. Personal injury can result from the sudden release of the spring-loaded unloader valve.

Remove the capscrews, the lock washers, and the flat washers that secure the unloader valve assembly to the cylinder head cover. Remove the unloader valve assembly and the spring from the cylinder head and the cover.

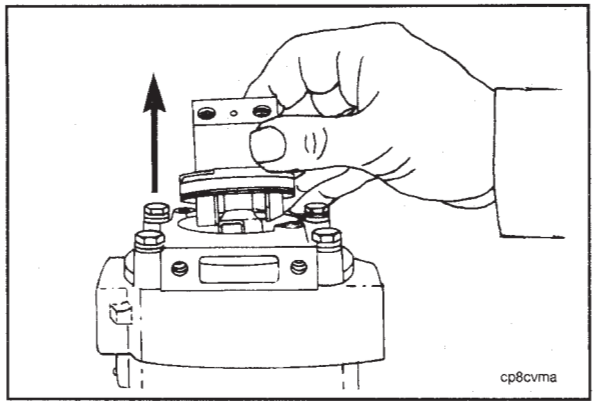

Visually inspect the unloader valve for carbon buildup. If carbon or heavy varnish is present, remove, clean, and inspect the compressor head and the valve assembly. Replace the parts as necessary. Refer to the appropriate Air Equipment Manual listed below for procedures, or contact your nearest Cummins Authorized Repair Location:

- Single Cylinder Air Compressor, Bulletin No. 3810242
- SS338E Single Cylinder Air Compressor, Bulletin No. 3810457
- ST676 Two Cylinder Air Compressor, Bulletin No. 3810257.
- ST773 Two Cylinder Air Compressor, Bulletin No. 3810347.

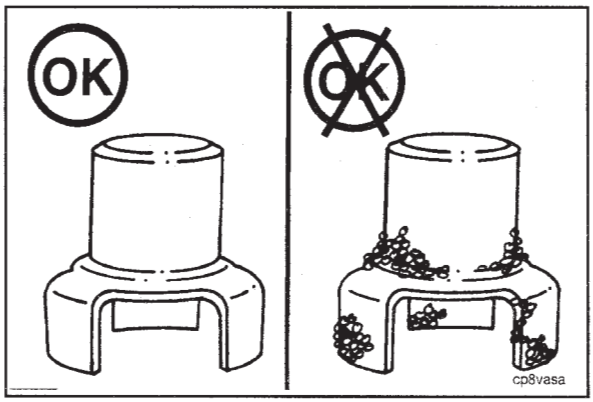

If the unloader valve is clean or only lightly varnished, install a new o-ring on the unloader body and a new rectangular seal inside the unloader body cavity.

NOTE: The open side of the rectangular seal **must** face the top of the unloader body.

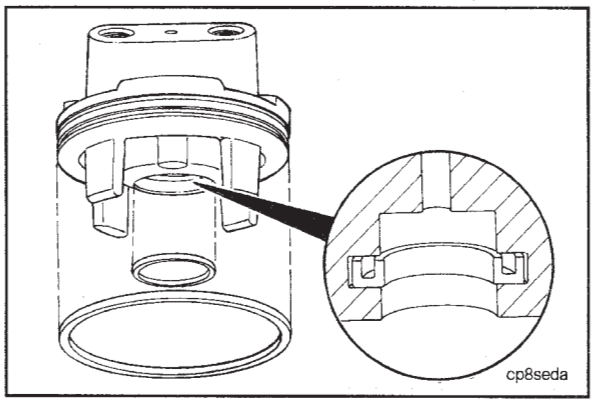

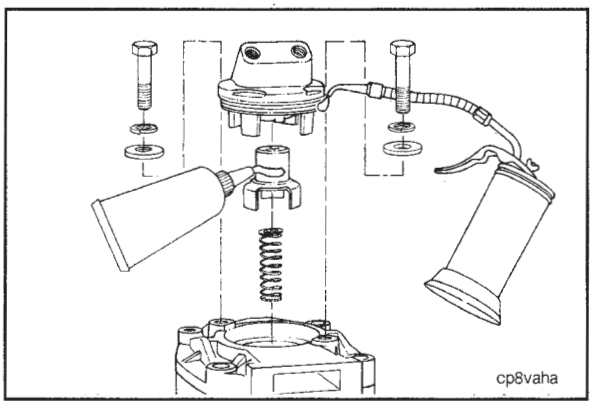

Lubricate the unloader cap with anti-seize compound. Lubricate the unloader body o-ring with engine oil. Assemble the unloader assembly to the cylinder head cover. Tighten the capscrews.

Torque Value: 14 N•m [10 ft-lb]

Warning: Exceeding the torque specifications on these capscrews can permanently distort the compressor cover, causing premature cover gasket leaks.

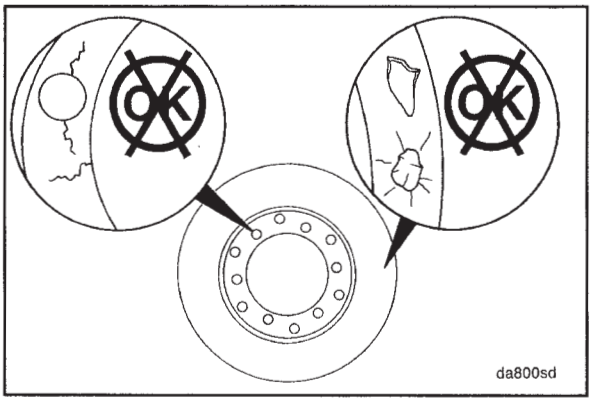

Vibration Dampers

Viscous Vibration Dampers-Inspection

Caution: The silicone fluid in the damper will become solid after extended service and will make the damper inoperative. An inoperative damper can cause major engine or driveline failures.

Vibration dampers have a limited service life. The damper **must** be replaced after 576,000 km [360,000 miles] or 15,000 hours of service.

NOTE: Do **not** repair or balance a viscous damper in the field.

Check the damper for evidence of fluid loss, dents, and wobble. Visually inspect the vibration damper thickness for any deformation or raising of the damper front cover plate.

If any variations or deformations are detected, refer to the Troubleshooting and Repair Manual for inspection procedures.

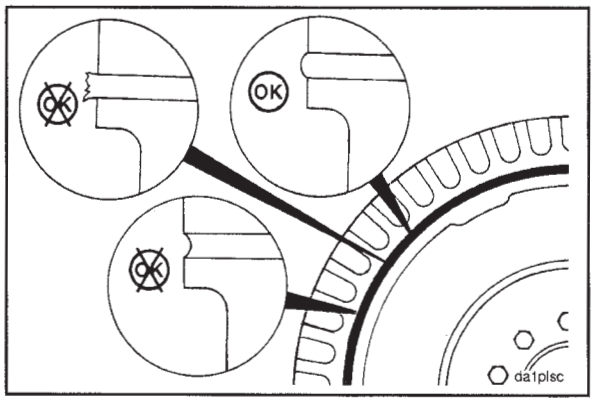

Rubber Vibration Dampers-Inspection

NOTE: Vibration dampers have a limited service life. The damper **must** be replaced after 576,000 km, [360,000 miles], or 15,000 hours of service.

Inspect the rubber member for deterioration. If pieces of rubber are missing or if the elastic member is more than 3 mm [1/8 inch] below the metal surface, replace the damper. Refer to the Troubleshooting and Repair Manual for detailed inspection procedures.

Check the alignment of the index marks on the hub and the inertia member. If the marks are more than 1.5 mm [1/16 inch] out of alignment, the damper **must** be replaced.

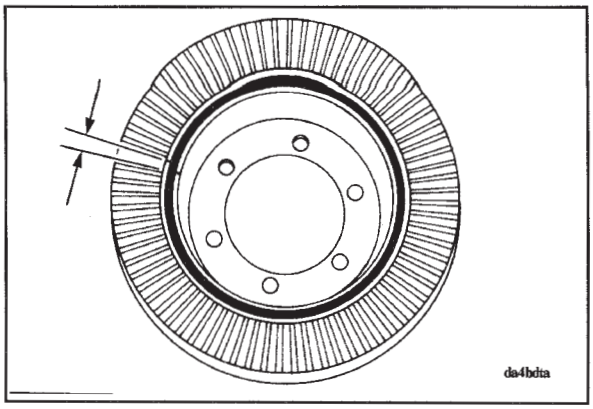

NOTES

Section 9 - Other Maintenance Procedures

Section Contents

Page

Miscellaneous 9-2

Miscellaneous



On the following components follow the manufacturer's recommended maintenance procedures.

- Alternator
- Generator
- Starting Motor
- Air Compressor
- Electric Connections
- Batteries
- Freon Compressor
- Hydraulic Governor

Section D - Systems Diagrams

Section Contents

Page

Big Cam III Coolant Flow (Cooling Loop) 10-6

Combustion Air System Flow Diagram 10-7
Big Cam III Intake System 10-7
Exhaust System 10-7

Compressed Air System Flow Diagrams 10-8

Fuel Systems Flow Diagram 10-3

General Information 10-2

Lubricating System Flow Diagram 10-4, 10-5

General Information

The following drawings show the flow through the engine systems. Although parts can change between different applications and installations, the flow remains the same. The systems shown are:

- Fuel System
- Lubricating Oil System
- Coolant System
- Intake Air System
- Exhaust System
- Compressed Air System

Knowledge of the engine systems can help you in trouble-shooting, service and general maintenance of your engine.

Fuel Systems Flow Diagram

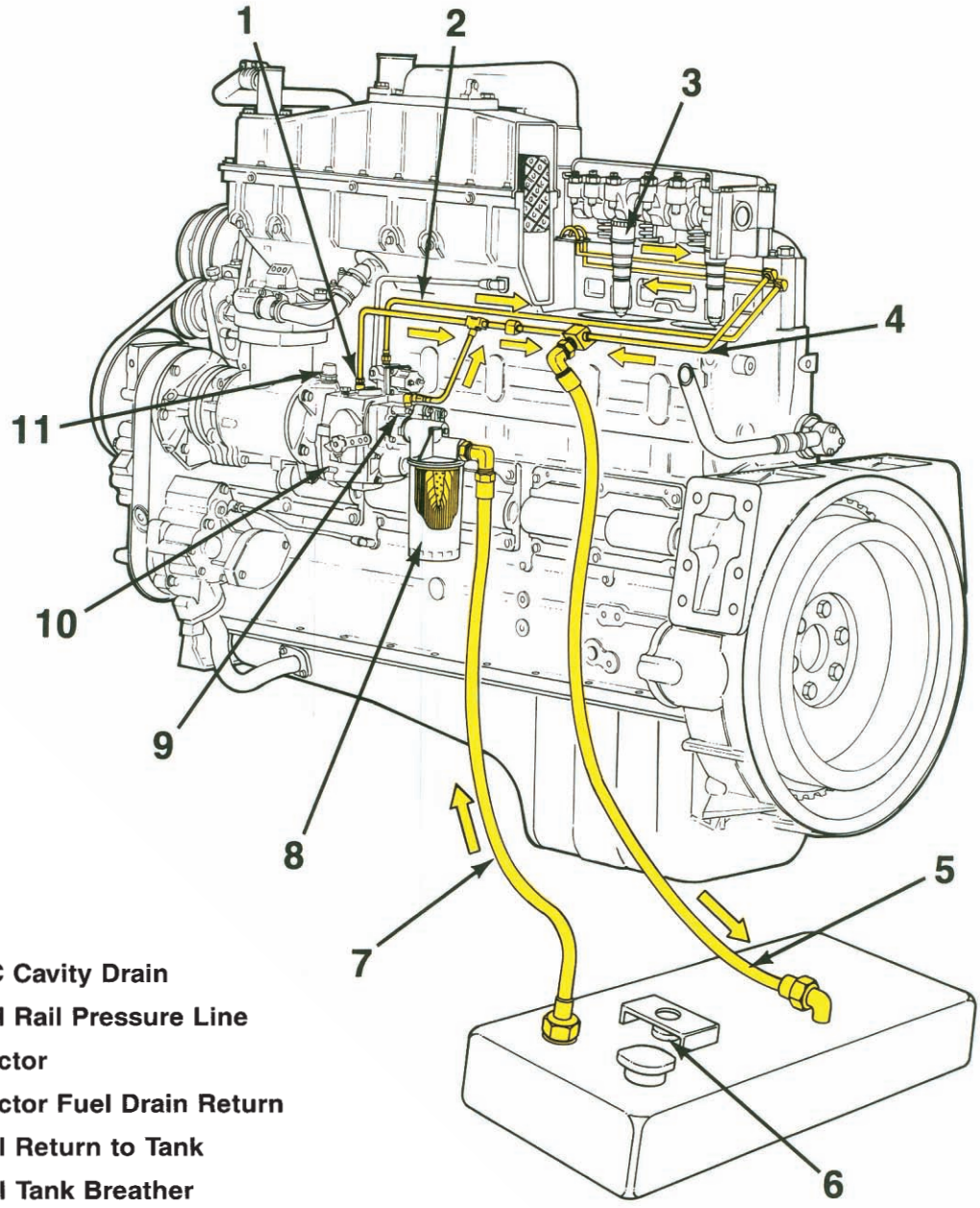

1. AFC Cavity Drain
2. Fuel Rail Pressure Line
3. Injector
4. Injector Fuel Drain Return
5. Fuel Return to Tank
6. Fuel Tank Breather
7. Fuel Inlet Supply
8. Fuel Filter
9. Gear Pump Coolant Drain
10. Fuel Pump
11. Tachometer Drive

Lubricating System Flow Diagram

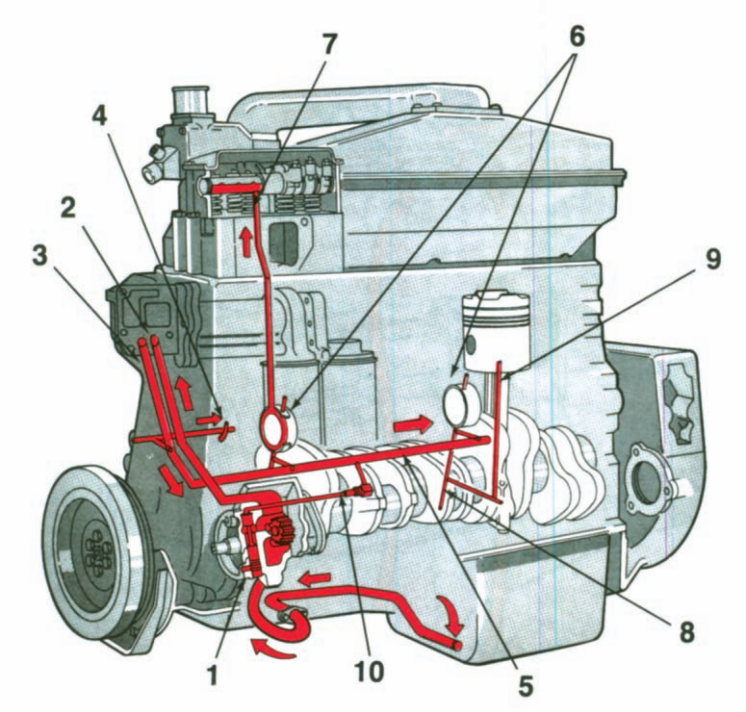

1. Oil Pump
2. To Lubricating Oil Cooler
3. From Lubricating Oil Cooler
4. Piston Cooling Nozzle
5. Main Oil Rifle
6. Cam Bushings
7. To Overhead
8. Main Bearing
9. Connecting Rod Drilling
10. Rifle Pressure Signal Line

Lubricating System Flow Diagram (Continued)

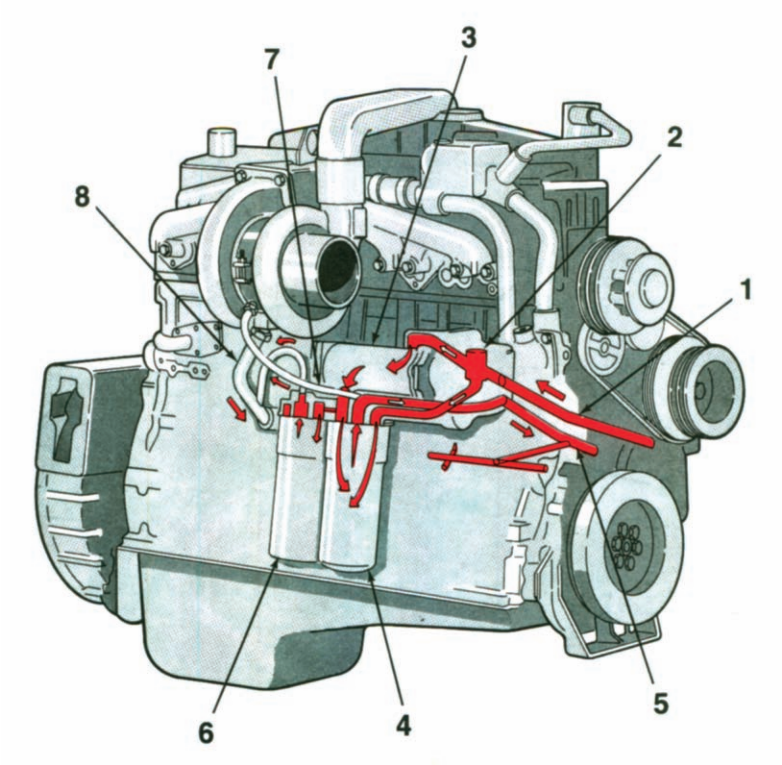

1. From Oil Pump
2. Oil Cooler Bypass Valve
3. Oil Cooler
4. Full Flow Oil Filter
5. To Main Rifle
6. Bypass Oil Filter
7. Turbocharger Supply
8. Turbocharger Drain

Big Cam III Coolant Flow (Cooling Loop)

1. Water Pump
2. Oil Cooler
3. Water Manifold
4. Aftercooler Inlet
5. Aftercooler Outlet
6. Thermostat
7. Bypass
8. To Radiator
9. Water Pump Inlet

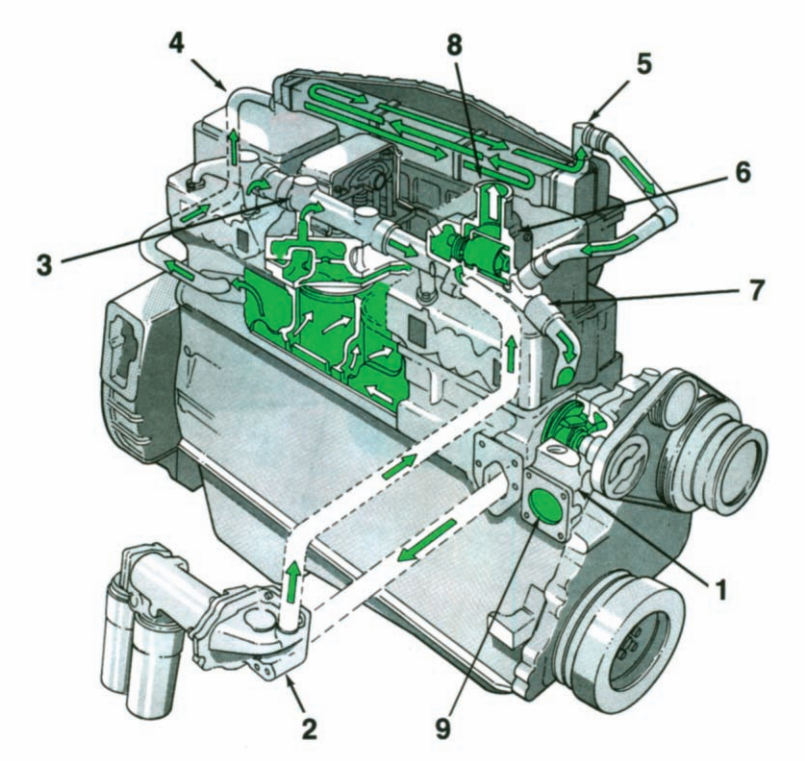

Combustion Air System Flow Dia

Big Cam III Intake System

1. Intake Air Inlet to Turbocharger
2. Turbocharger Air Crossover
3. Aftercooler
4. Intake Manifold
5. Intake Valve Ports

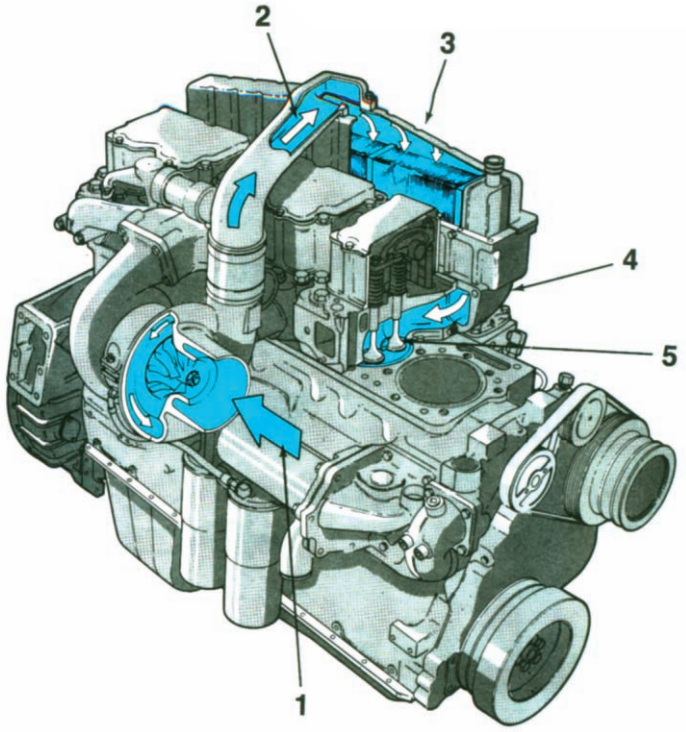

Exhaust System

1. Exhaust Valve Ports
2. Exhaust Manifold
3. Turbocharger Exhaust Outlet

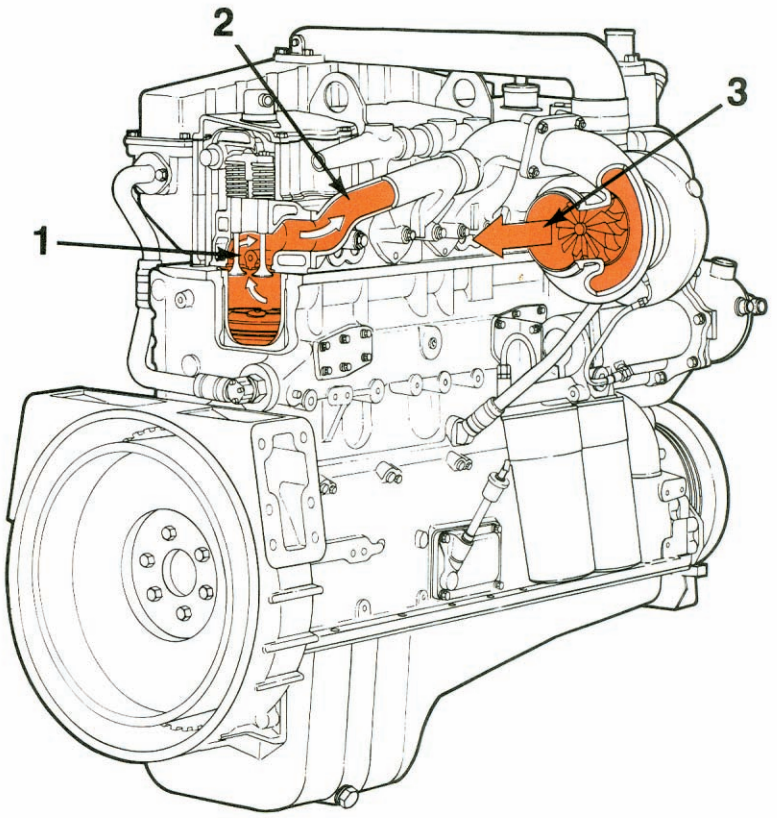

Compressed Air System Flow Diagrams

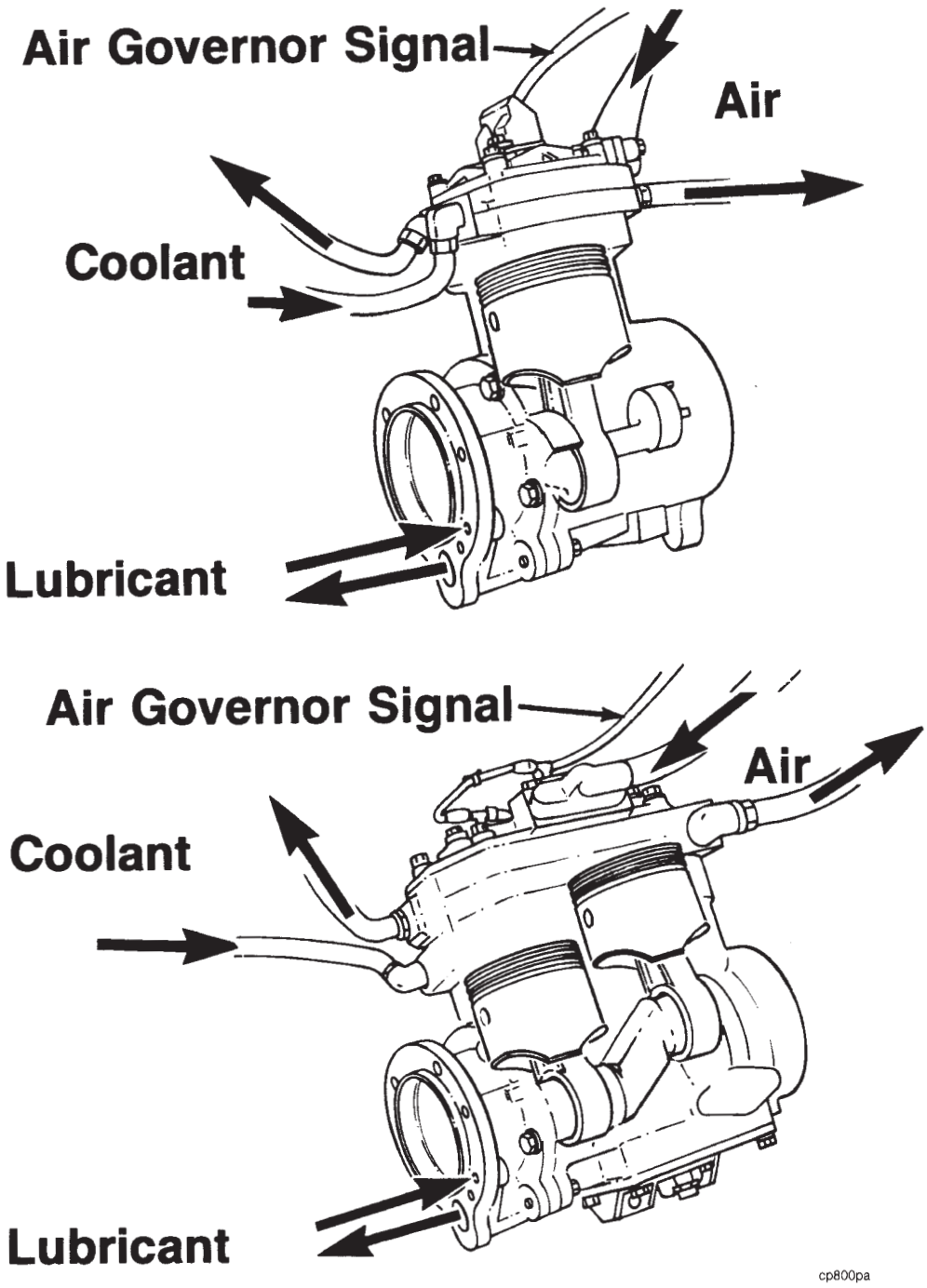

Section T - Troubleshooting

Section Contents

Page

Troubleshooting Guide for the Operator T-2
Coolant Temperature Above Normal T-11, T-12
Coolant Temperature Below Normal T-13
Engine Cranks But Will Not Start (No Smoke From Exhaust) T-6
Engine Hard to Start or Will Not Start (Exhaust Smoke Present) T-5
Engine Power Output Low T-15, T-16
Engine Starts But Will Not Keep Running T-7
Engine Will Not Crank or Cranks Slowly (Air Starter) T-3
Engine Will Not Crank or Cranks Slowly (Electric Starter) T-4
Engine Will Not Reach Rated Speed When Loaded T-17
Engine Will Not Shut Off T-8
Exhaust Smoke Excessive Under Load T-14
Instructions T-2
Lubricating Oil Pressure Low T-9
Oil Filter Plugging - Low Oil Pressure Light On T-10
White Smoke or Rough Running At Idle (After Warmup Period) T-18

Troubleshooting Guide for the Operator

Warning: Performing troubleshooting procedures not outlined in this section can result in equipment damage or personal injury. Consult a Cummins Authorized Repair Location for diagnosis and repair beyond that which is outlined and for symptoms not listed in this section. Before beginning any troubleshooting, please refer to General Safety Instructions in Section i of this manual.

This guide describes some typical engine operating problems, their causes, and some acceptable corrections to those problems. For more procedure information, refer to the Troubleshooting and Repair Manual. Unless noted otherwise, the problems listed are those which an operator can diagnose and repair.

Follow the suggestions below for troubleshooting:

- Study the problem thoroughly before acting.
- Refer to the engine system diagrams.
- Do the easiest and most logical things first.
- Find and correct the cause of the problem.

Instructions

Read each row of blocks from top to bottom. Follow the arrows through the chart to identify corrective action.

Engine Will Not Crank or Cranks Slowly (Air Starter)

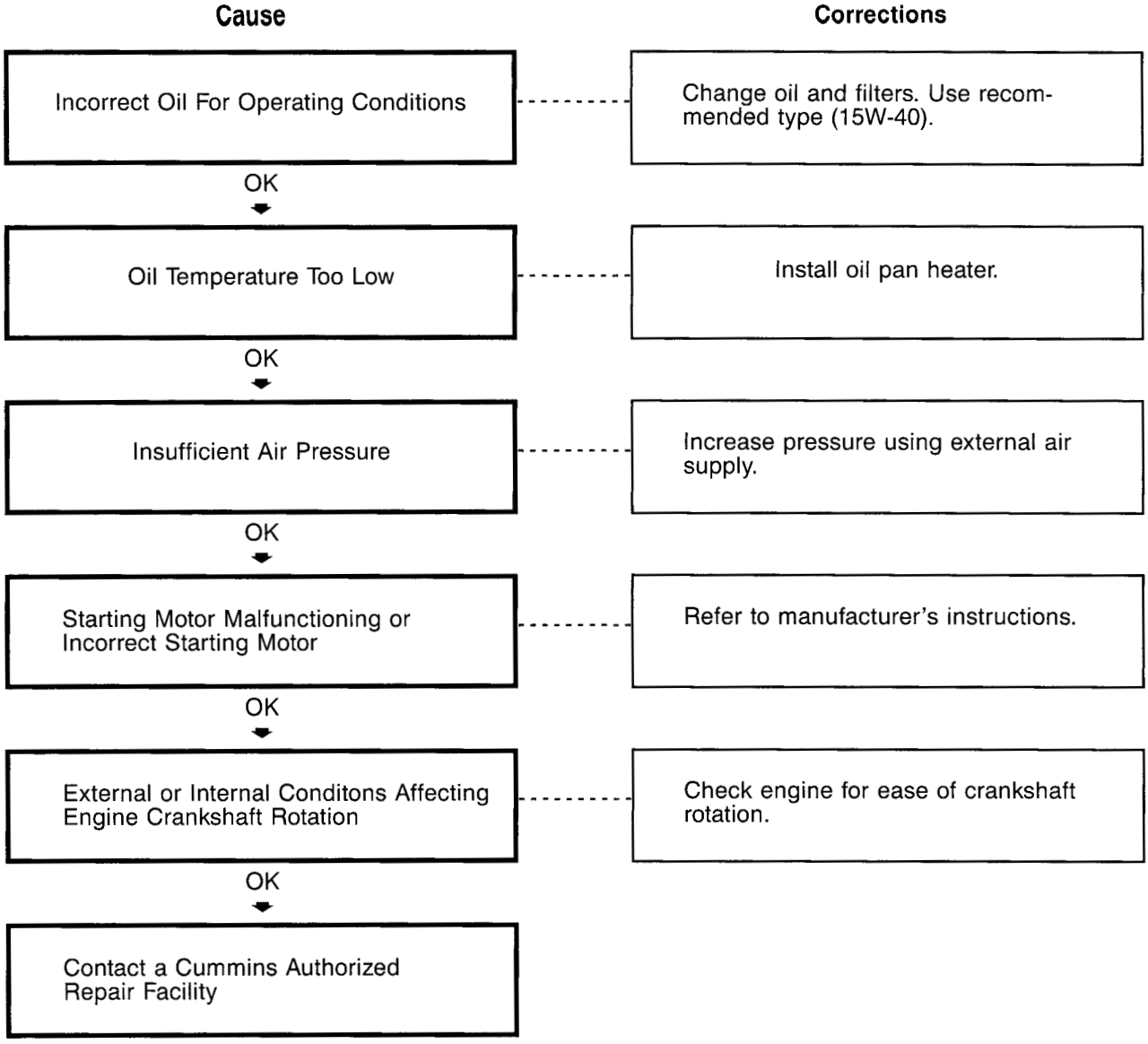

Engine Will Not Crank or Cranks Slowly (Electric Starter)

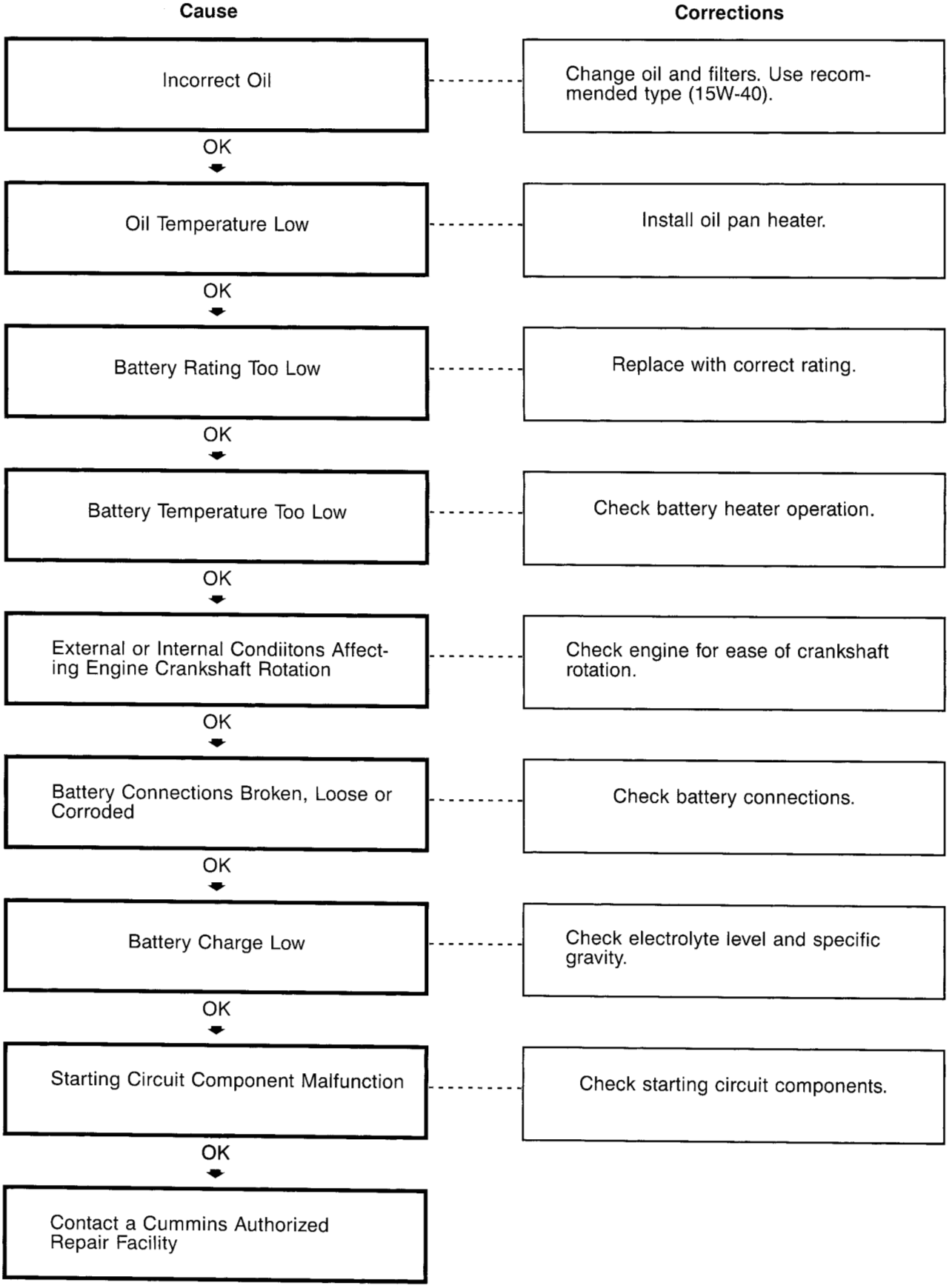

Engine Hard to Start or Will Not Start (Exhaust Smoke Present)

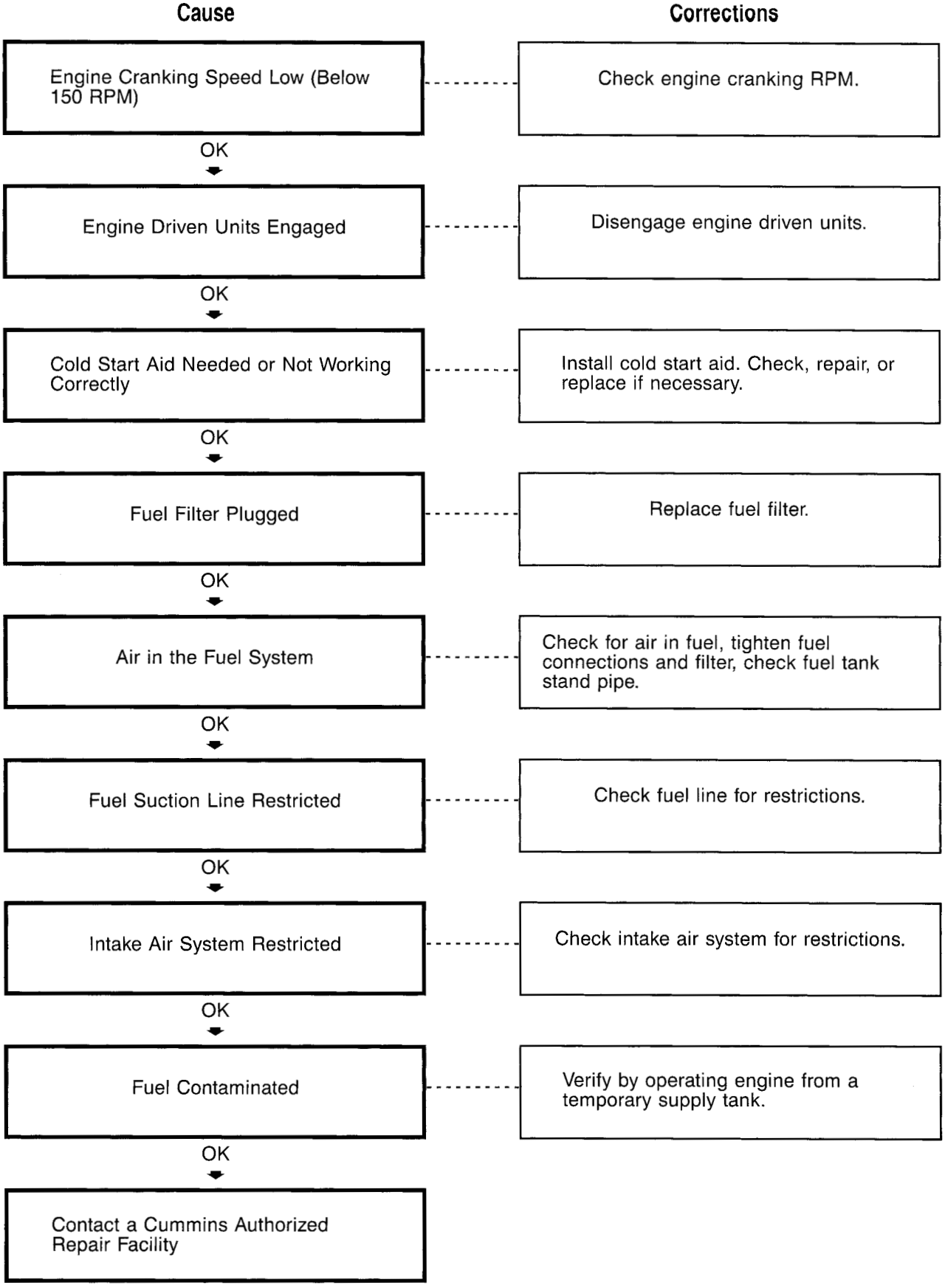

Engine Cranks But Will Not Start (No Smoke From Exhaust)

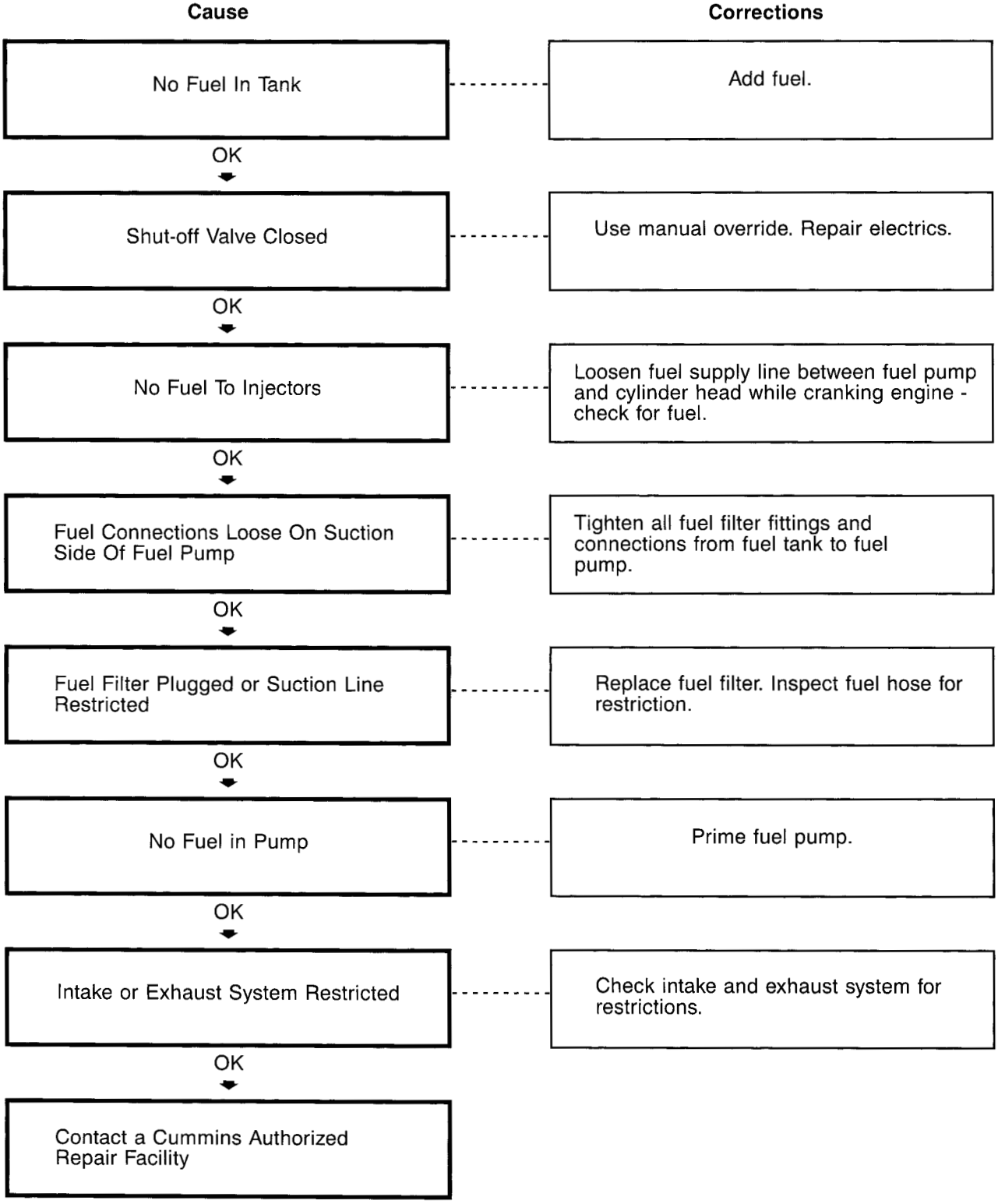

Engine Starts But Will Not Keep Running

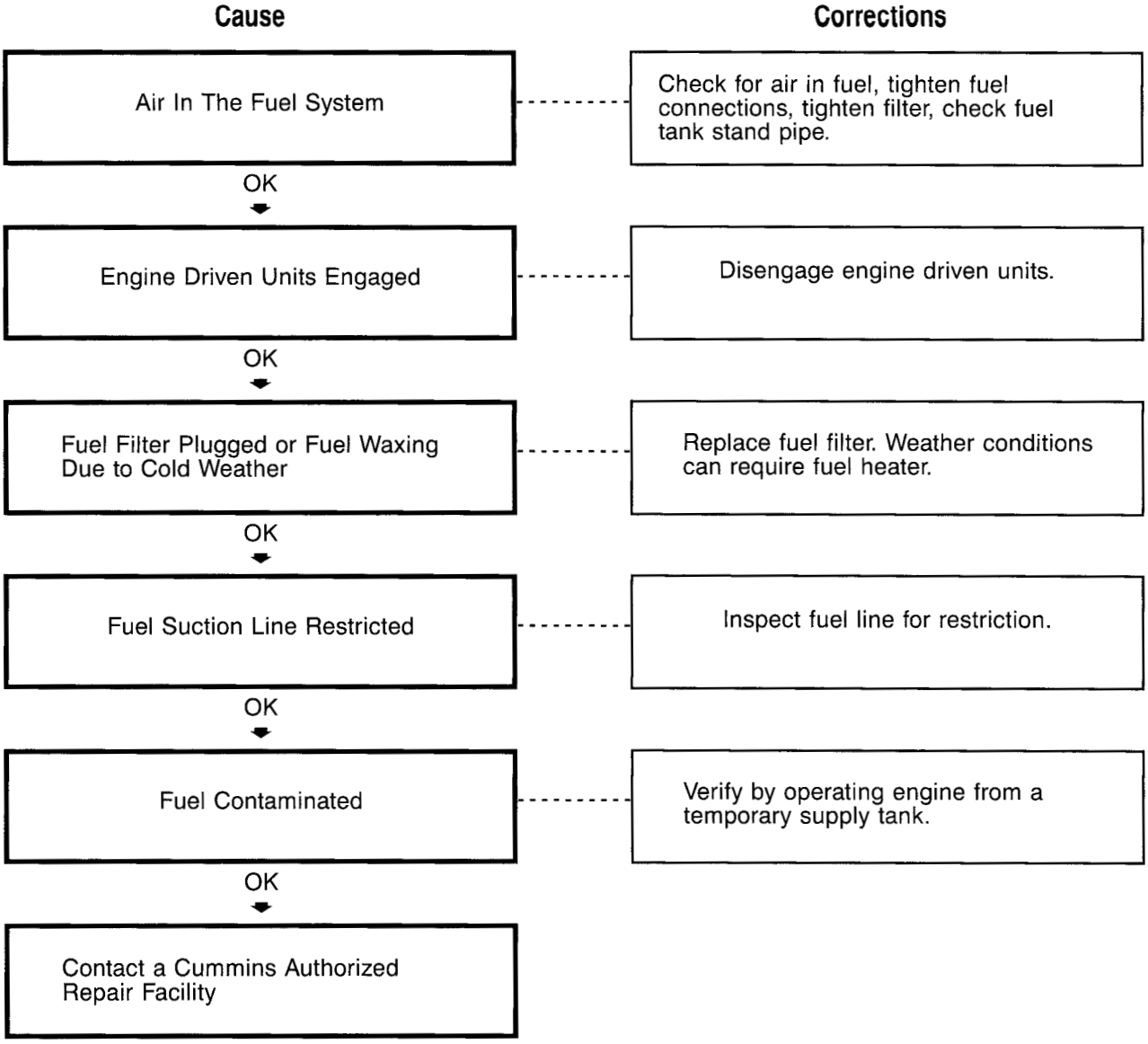

Engine Will Not Shut Off

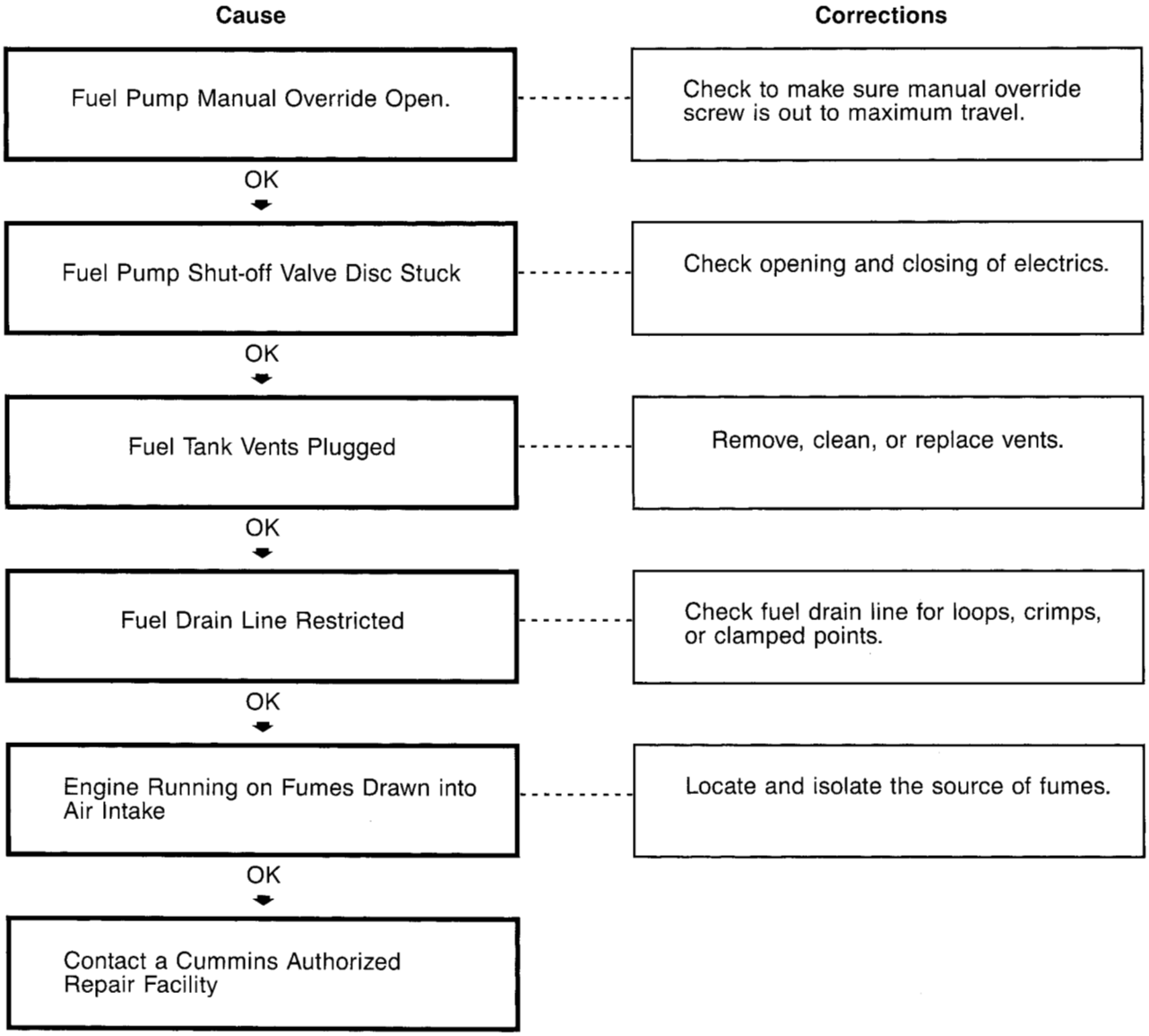

Lubricating Oil Pressure Low

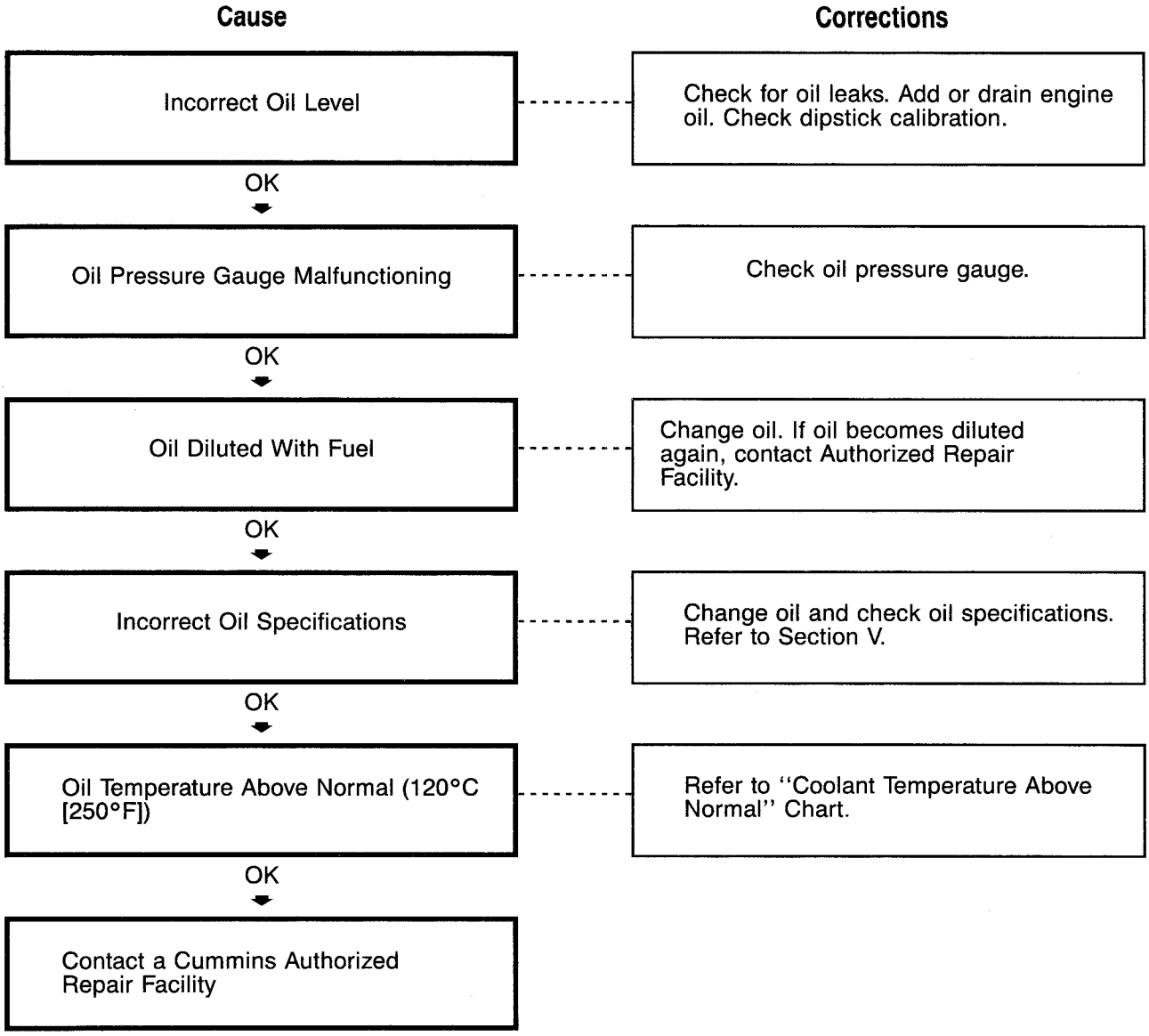

Oil Filter Plugging - Low Oil Pressure Light On

Cause	Corrections
Oil Level Incorrect	Oil level must be between the high mark and low mark. Check dipstick calibration.
OK ↓	
Oil Filter Restricted	Check oil pressure. If within specifications, change full flow filter.
OK ↓	
Oil Dilution or Improper Viscosity Oil	Change oil and find source of dilution.
OK ↓	
Electrical Short in Low/High Oil Pressure Filter Alarm	Check wiring to light.
OK ↓	
Oil Temperature Above Normal (120°C [250°F]).	Refer to "Coolant Temperature Above Normal" chart.
OK ↓	
Contact a Cummins Authorized Repair Facility	

Coolant Temperature Above Normal

Cause	Corrections
Low Coolant Level	Add coolant.
OK	
Radiator Fins Damaged or Obstructed with Debris	Inspect radiator fins. Clean or repair if necessary.
OK	
Collapsed or Restricted Radiator Hose	Inspect hoses. Replace if necessary.
OK	
Loose Fan Drive Belt	Check belt tension and tighten if necessary.
OK	
Incorrect Oil Level	Add or drain engine oil. Check dipstick calibration.
OK	
Cooling Fan Shroud Damaged or Missing	Inspect shroud. Repair, replace, or install.
OK	
Incorrect or Malfunctioning Radiator Cap	Check the radiator cap. Replace if necessary.
OK	
Temperature Gauge Malfunctioning	Test the gauge. Repair or replace if necessary.
OK	

(Continued)

Coolant Temperature Above Normal (Continued)

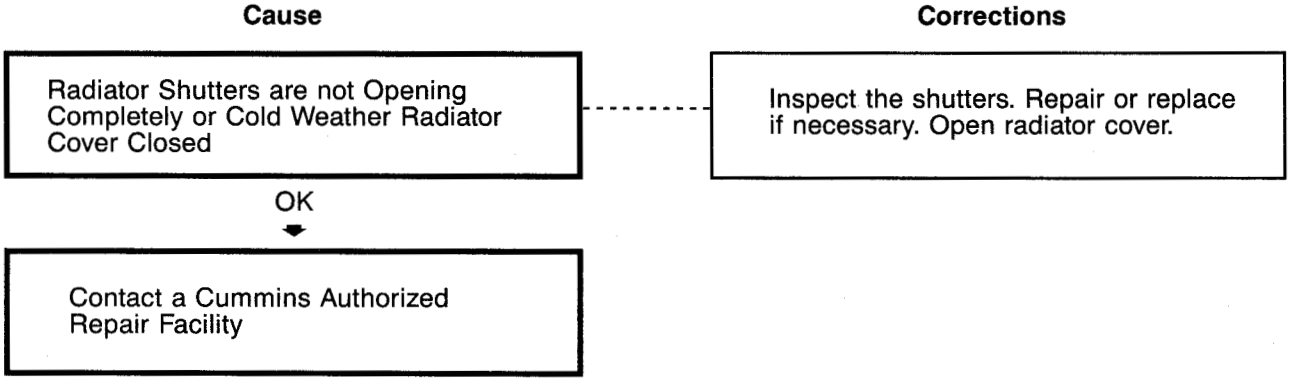

Coolant Temperature Below Normal

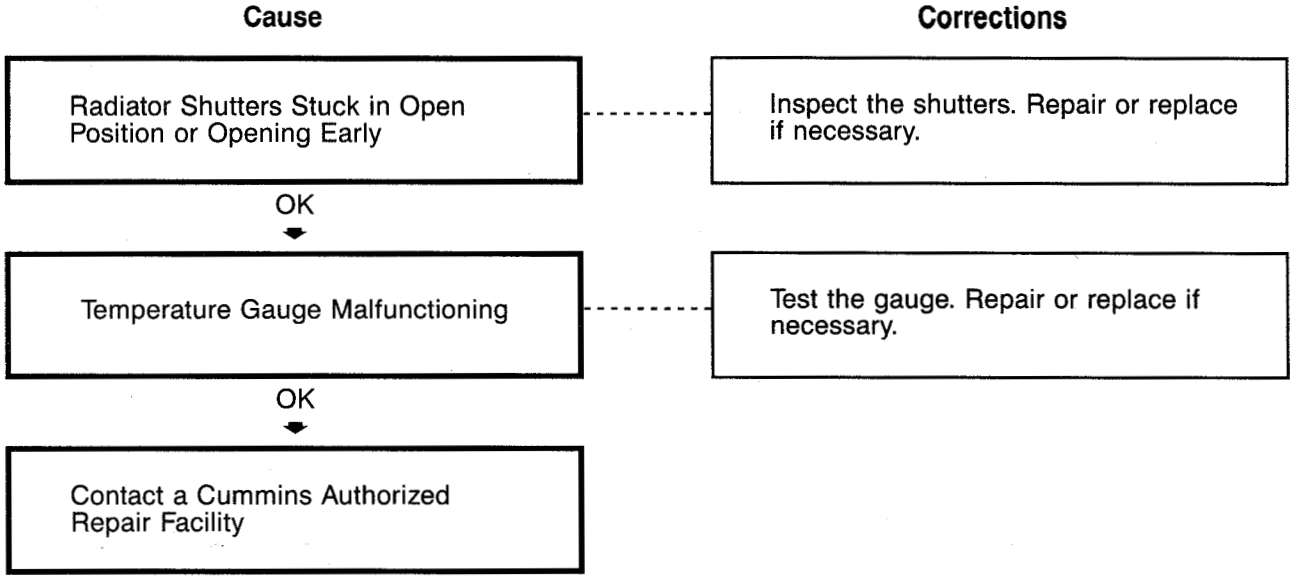

Exhaust Smoke Excessive Under Load

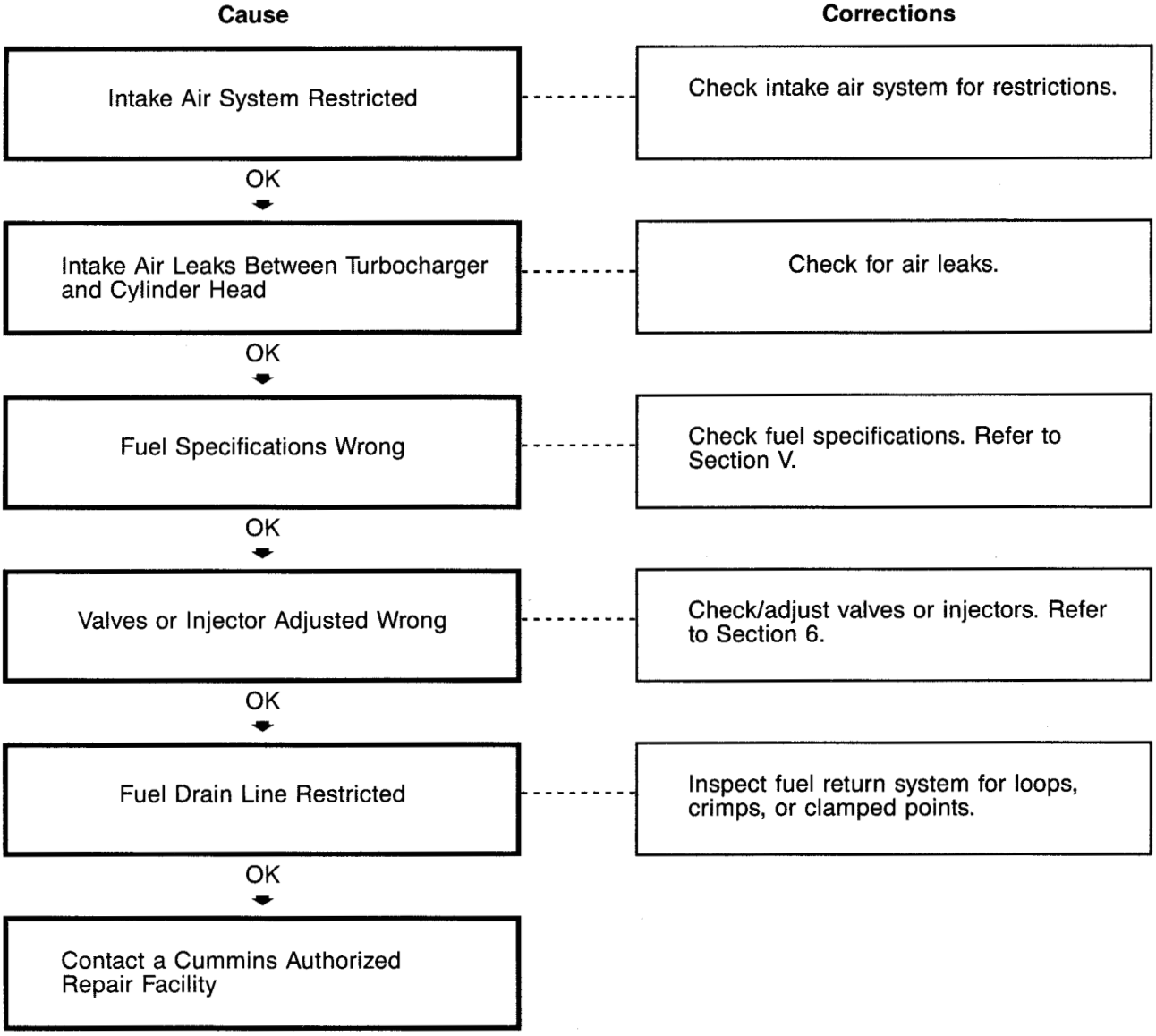

Engine Power Output Low

Cause	Corrections
Excessive Load for Engine Horsepower Rating	Reduce vehicle load.
OK ▼	
Low Power Due to Altitude	Derate engine above 3600 meters [12,000 feet].
OK ▼	
Fuel Suction Line or Fuel Filter Restricted	Check fuel line for restriction. Replace fuel filter.
OK ▼	
Lubricating Oil Level Too High	Check dipstick calibration and oil pan capacity.
OK ▼	
Throttle Linkage Adjustment Wrong	Check throttle linkage adjustment for full opening of throttle lever.
OK ▼	
Intake or Exhaust System Restricted	Check intake and exhaust systems for restrictions.
OK ▼	
Air in Fuel - Spongy Throttle is Symptom	Check for air in fuel, tighten fuel connections and filter, check fuel tank stand pipe.
OK ▼	

(Continued)

Engine Power Output Low (Continued)

Cause	Corrections
Fuel Drain Line Restricted or Fuel Tank Vents Plugged	Check fuel drain line for loops, crimps or clamped points. Remove, clean, or replace vents.
OK ⬇	
Valves or Injectors Adjusted Wrong	Check/adjust valves or injectors. Refer to Section 6.
OK ⬇	
Fuel Quality Poor	Verify by operating engine from a temporary tank that contains good fuel. Refer to fuel specifications in Section V.
OK ⬇	
High Intake Air Temperature - (Above 38°C [100°F])	Use outside air to turbocharger in warm weather.
OK ⬇	
Low Intake Air Temperature - (Below 0°C [32°F])	Use intake air from under hood in cold weather.
OK ⬇	
High Fuel Temperatures - (Above 70°C [158°F])	Fill fuel tanks; turn off fuel heater. Maximum fuel temperature 70°C [158°F].
OK ⬇	
Contact a Cummins Authorized Repair Facility	

Engine Will Not Reach Rated Speed When Loaded

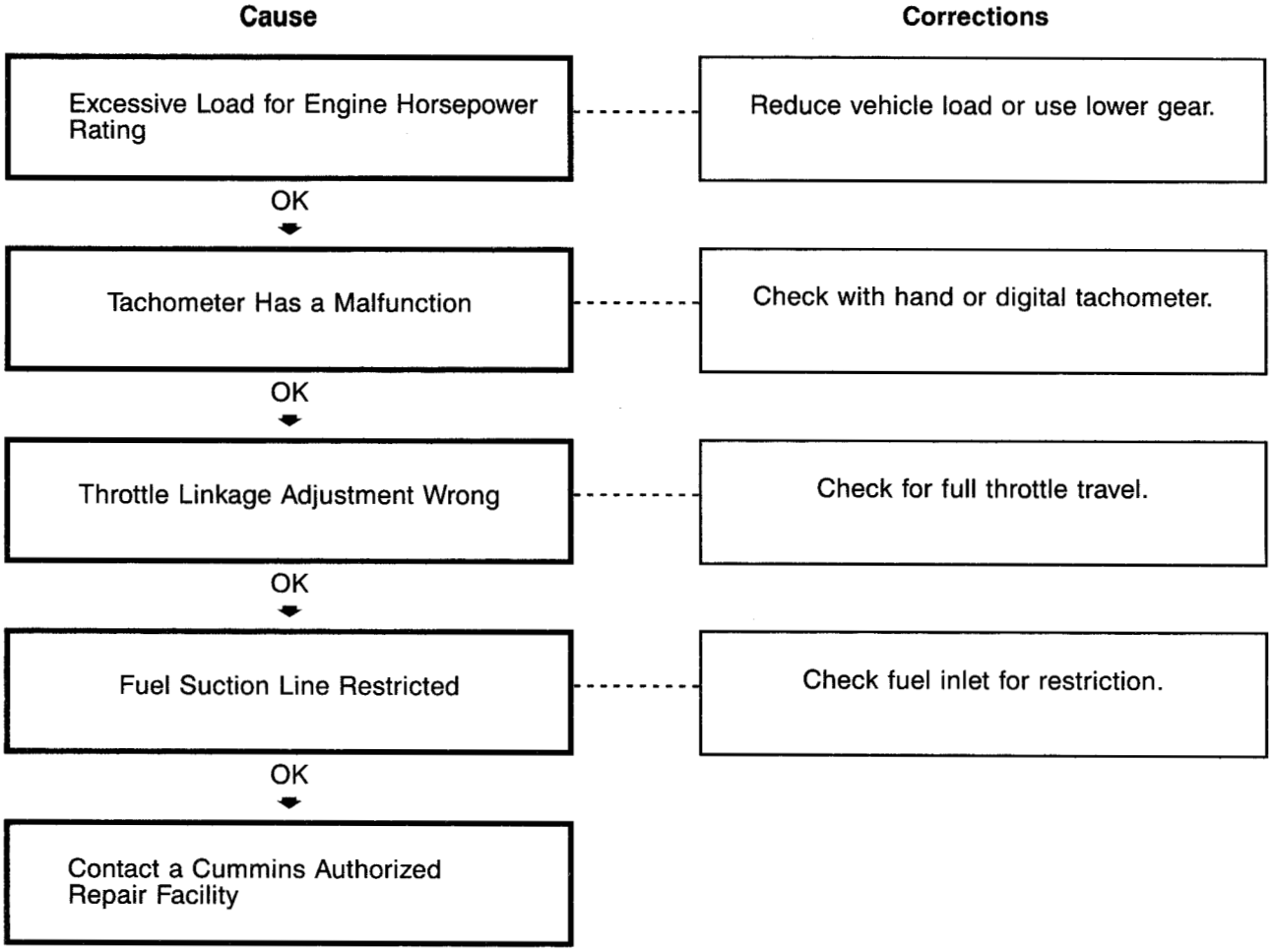

White Smoke or Rough Running At Idle (After Warmup Period)

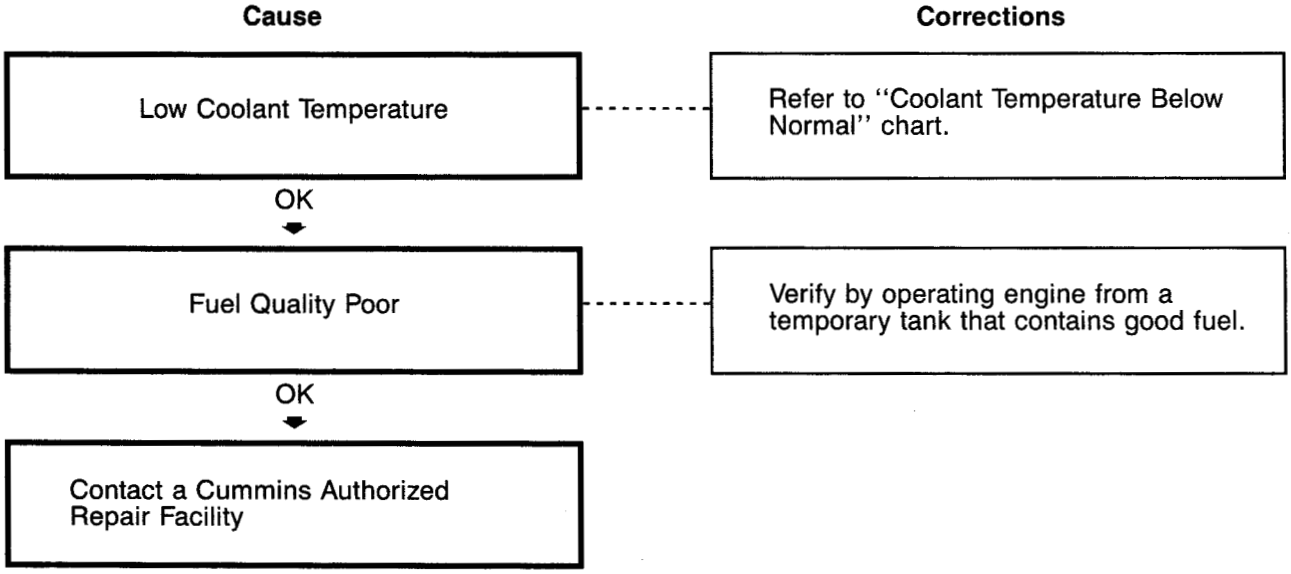

Section A - Adjustment, Repair, and Replacement

Section Contents

Page

Air Starting Motors A-2
Maintenance A-2

Alternator Drive Belt A-6
Adjustment A-6

Battery Connections A-2
Parallel and Series Connections A-2

Belt Tension A-3
Checking A-3

Belts - General Inspection A-3

Drive Belts A-6
Replacement A-6

Fan Drive Belt A-4
Adjustment A-4

Storage for Engines Out of Service A-7

Water Pump Belt - Adjustment (Inside Idler Pulley) A-5

Air Starting Motors

The air starting motor system (tanks, line sizes, and valves) is designed and installed by the original equipment manufacturers and the starting motor suppliers. Refer any questions about the air starting systems to the manufacturer.

Maintenance

- Do **not** operate the air starting motor with air pressure lower than 480 kPa [70 psi].
- Maintain the air starting motor according to the manufacturer's recommendations.
- For maximum efficiency, the hoses, tubes, and lines **must not** leak.
- Refer to the original equipment manufacturers' and starting motor manufacturers' manuals for specific information regarding the starting motors, valves, and systems.

Battery Connections

Parallel and Series Connections

Caution: To avoid electrical shock and potential eye danger when using jumper cables to start the engine, make sure to connect the cables in parallel: positive (+) to positive (+) and negative (-) to negative (-). When using an external electrical source to start the engine, turn the disconnect switch to the OFF position and remove the key before attaching the jumper cables.

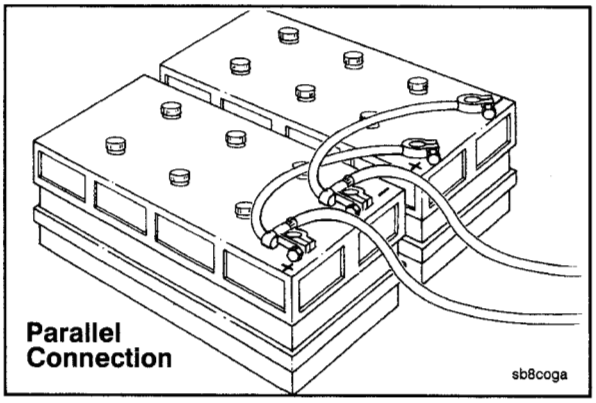

The accompanying illustration shows a typical **parallel** battery connection. This arrangement doubles the cranking amperage.

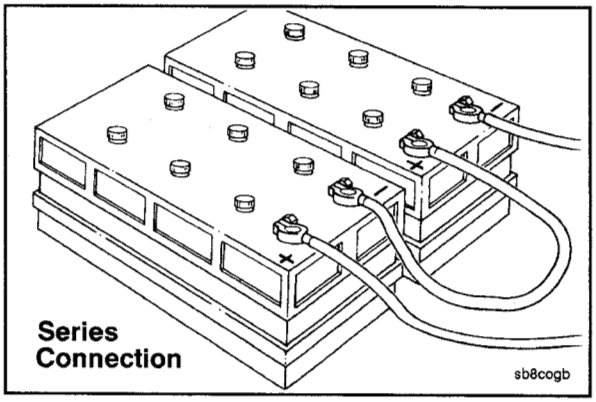

This illustration shows a typical **series** battery connection. This arrangement, positive to negative, doubles the voltage.

For optimum electrical system and starting motor performance, keep battery connections clean and tight.

Belts - General Inspection



Visually inspect the belts. Replace belts that are cracked or frayed. Adjust belts that have a glazed or shiny surface which indicates belt slippage. Correctly installed and tensioned belts will show even pulley and belt wear.

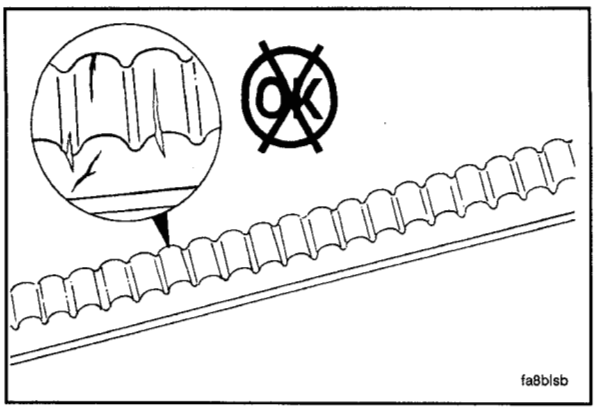

Belt damage can be caused by:

- Incorrect tension
- Incorrect size or length
- Pulley misalignment
- Incorrect installation
- Severe operating environment
- Oil or grease on belts

Belt Tension

Checking



Measure the belt tension in the center span of the pulleys.

Refer to the Belt Tension Chart in Section V for the correct gauge and tension value for the belt width used.

An alternate method (deflection method) can be used to check belt tension by applying 110 N [25 lbf] force between the pulleys on v-belts. If the deflection is more than one (1) belt thickness per foot of pulley center distance, the belt tension **must** be adjusted.

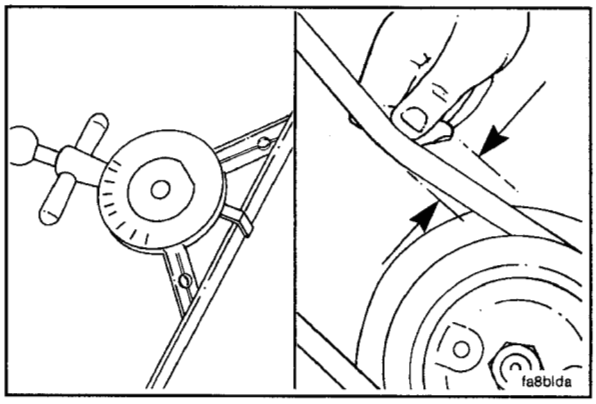

For cogged belts, make sure that the belt tension gauge is positioned so that the center tensioning leg is placed directly over the high point (hump) of a cog. Other positioning will result in incorrect measurement.

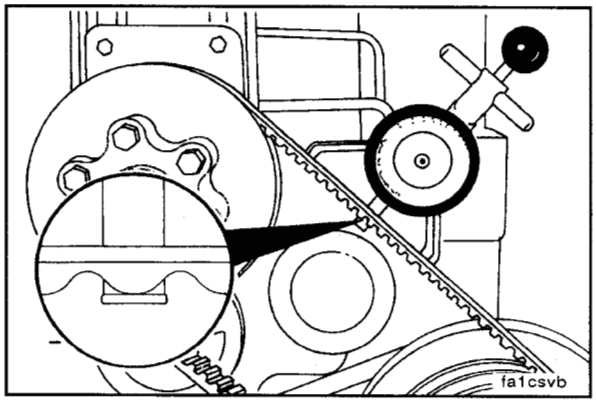

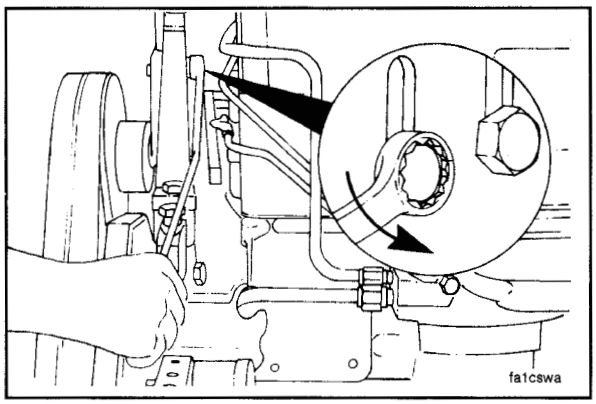

Fan Drive Belt

Adjustment

Loosen the four capscrews which secure the fan hub shaft to the bracket.

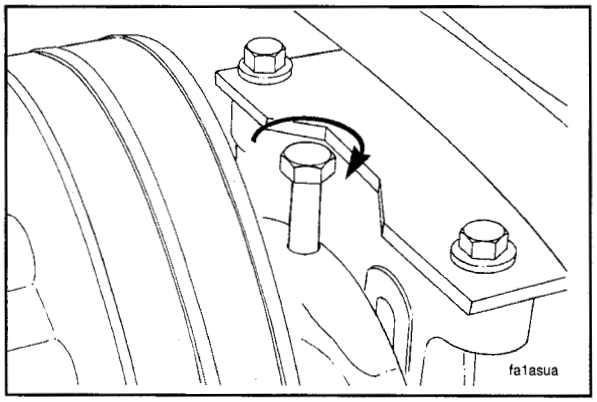

NOTE: Do **not** adjust belt tension to full value with the adjusting screw. Belt tension can increase when the lock nut is tightened and, therefore, reduce belt and bearing life.

Turn the adjusting screw to increase belt tension.

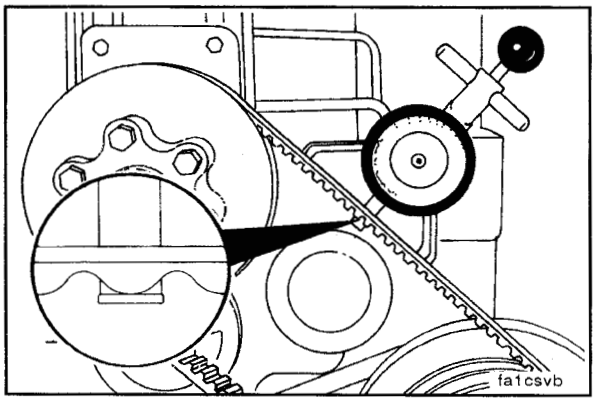

Measure the belt tension.

Refer to the Belt Tension Chart in Section V to select the correct gauge and tension values.

For cogged belts, make sure the belt tension gauge is positioned so that the center tensioning leg is placed directly over the high point (hump) of a cog. Other positioning will result in incorrect measurement.

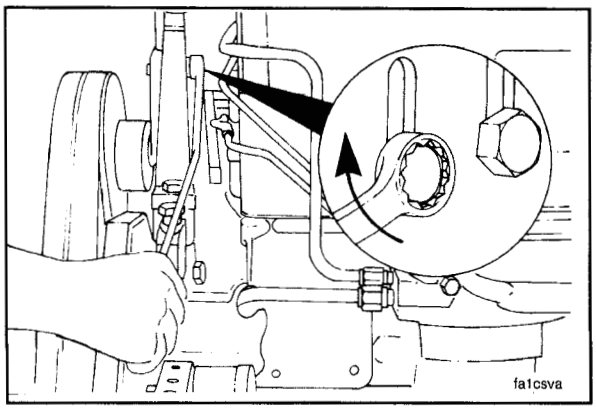

Tighten the four capscrews until the fan hub is in correct alignment with the fan hub bracket.

NOTE: Do **not** tighten the capscrews to full torque value.

Measure the belt tension.

Tighten the four capscrews.

Torque Value: 110 N•m [80 ft-lb]

Measure the belt tension again. Adjust if necessary.

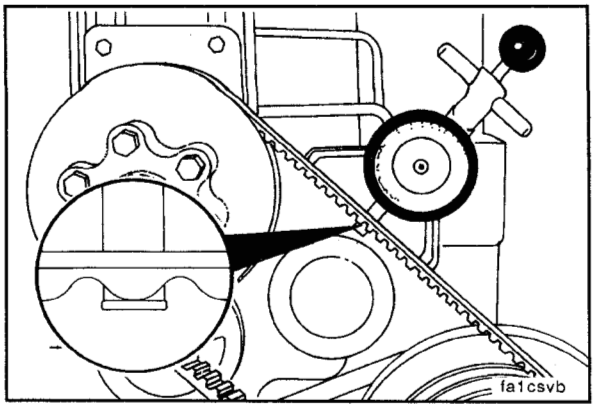

Loosen the adjusting screw 1/2 turn to prevent breakage.

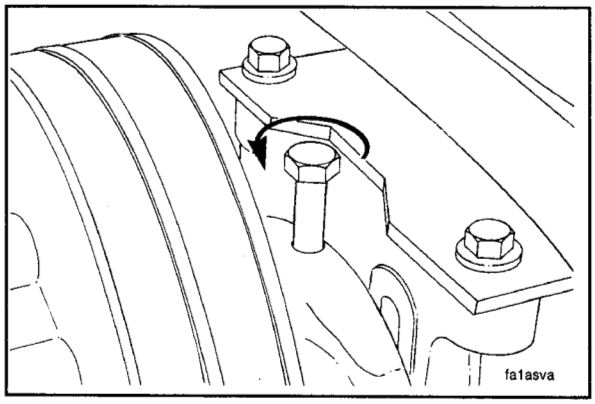

Water Pump Belt - Adjustment (Inside Idler Pulley)

Loosen the lock nut which secures the idler pulley to the water pump.

Turn the adjusting screw to adjust the belt tension.

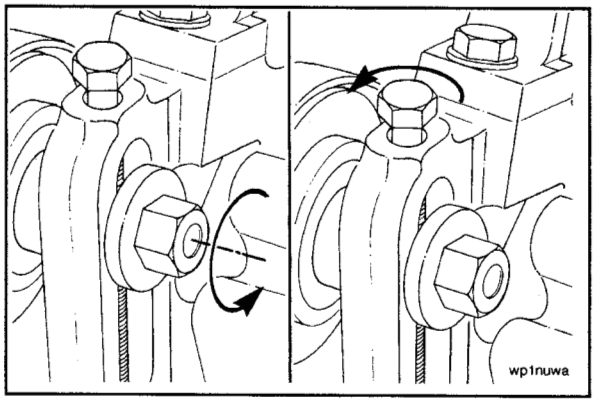

NOTE: Do **not** adjust belt tension to full value with the adjusting screw. Belt tension can increase when the lock nut is tightened and, therefore, reduce belt and bearing life.

Secure the idler pulley in position by tightening the lock nut.

Torque Value: 70 N•m [50 ft-lb]

Loosen the adjusting screw 1/2 turn to prevent breakage.

Measure the belt tension again. Adjust if necessary.

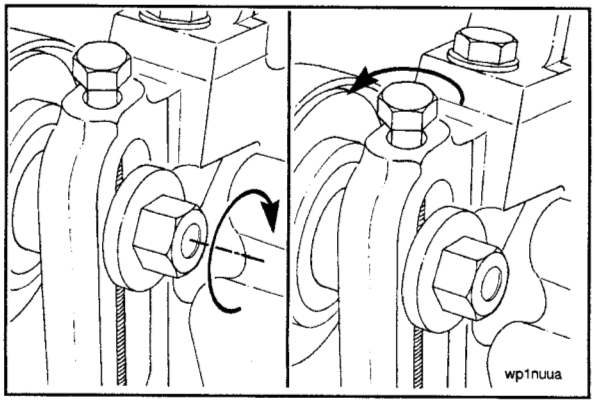

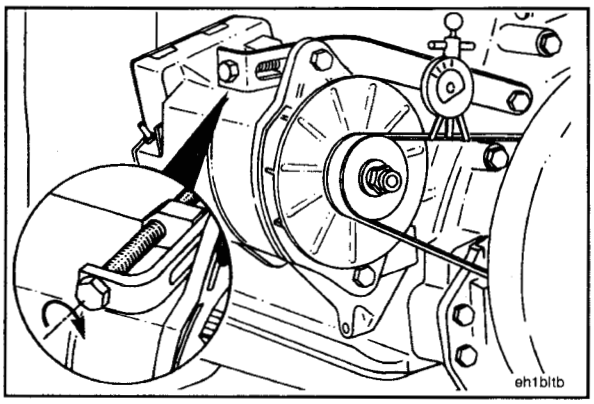

Alternator Drive Belt

Adjustment

- Loosen the adjustment link locking capscrew and alternator pivot bolt.
- Turn the adjusting screw to adjust belt tension. Refer to the Belt Tension Chart in Section V for correct tension value.
- Tighten the adjustment link locking capscrew and alternator pivot bolt.

Torque Value: 80 N•m [60 ft-lb]

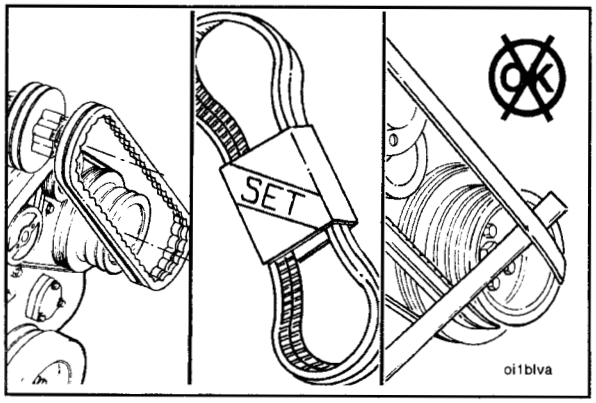

Drive Belts

Replacement

NOTE: When a drive uses two or more belts, replace the belts as a complete set.

Loosen the adjusting mechanism, and move the pulley centers as close as possible. The belts can then be installed without excessive force.

To prevent damage, do **not** roll a belt over the pulley or pry it on with a tool.

Refer to the Belt Tension Chart in Section V to select the correct gauge and tension value for the belt width.

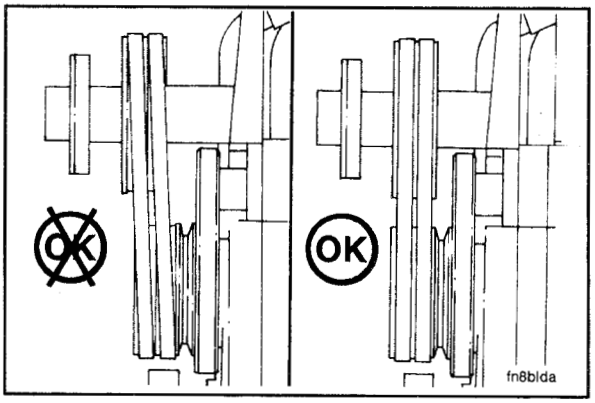

Pulley misalignment **must not** exceed 6 mm for each meter [1/16-inch for each 12 inches] of distance between the pulley centers.

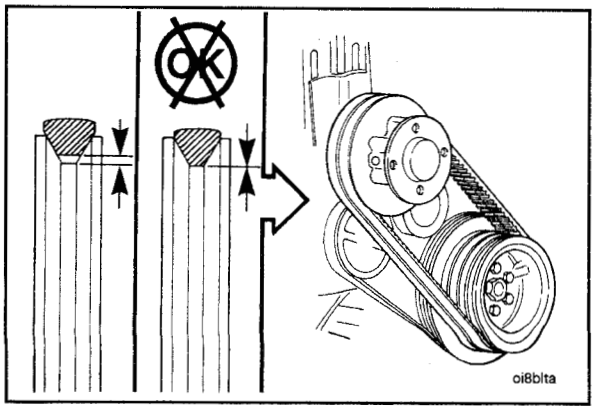

Belts **must not** touch the bottom of the pulley grooves, nor **must** they protrude over 3 mm [3/32-inch] above the top edge of the groove.

When a drive uses two or more belts, the belt riding depth **must not** vary over 2 mm [1/16-inch] between belts.

Storage for Engines Out of Service

If the engine will be out of service longer than 6 months, take special precautions to prevent rust. Contact the nearest Cummins Authorized Repair Location, or refer to the Engine Shop Manual, Bulletin No. 3379076, for information concerning engine storage procedures.



NOTES

Section V - Specifications and Torque Values

Section Contents

Page

Capscrew Markings and Torque Values V-28
Capscrew Markings and Torque Values - U.S. Customary V-28

Coolant Recommendations/Specifications V-13
Cooling System Maintenance V-21
Cooling System Sealing Additives V-15
Cooling System Soluble Oils V-15
Fleetguard® DCA4 Service Filters and Liquid Pre-Charge V-18
Heavy Duty Coolant V-14
Supplemental Coolant Additives (SCA's) V-15
Test Intervals V-24

Drive Belt Tension Chart V-27

Electrical System V-6
Batteries (Specific Gravity) V-7

Fuel Recommendations/Specifications V-7

General Specifications V-2
Air Intake System V-4
Compressed Air System V-5
Cooling System V-4
Exhaust System V-4
Fuel System V-3
Lubricating Oil System V-3

Lubricating Oil Recommendations/Specifications V-8
Arctic Operation V-9
Lubricating Oil Filter Specifications V-12
New Engine Break-In Oils V-9
Oil Change Interval V-10

General Specifications

Metric [U.S. Customary]

NOTE: Listed below are general specifications for this engine. Refer to each System Section for additional specifications.

Engine Speed ..... Refer to the engine dataplate for optional speed rating.

Displacement ..... 14.0 liters [855 C.I.D.]

Bore and stroke ..... 140 mm [5.5 in] x 152 mm [6.0 in]

Engine Weight

- Dry ..... 1303 kg [2870 lbs] to 1330 kg [2930 lbs]
- Wet ..... 1348 kg [2970 lbs] to 1376 kg [3030 lbs]

Firing order 1-5-3-6-2-4

Valve and injector settings:

- Intake valve adjustment ..... 0.28 mm [0.011 in]
- Intake valve limits ..... 0.15 to 0.41 mm [0.006 to 0.016 in]
- Exhaust valve adjustment ..... 0.58 mm [0.023 in]
- Exhaust valve limits ..... 0.46 to 0.76 mm [0.018 to 0.030 in]
- Top Stop injector adjustment (in engine) ..... 0.6 to 0.7 N•m [5 to 6 in-lb]
- Top Stop injector recheck limits ..... 0.00 to 0.05 mm [0.000 to 0.002 in lash]
- STC Top Stop injector adjustment (in engine) ..... 0.6 to 0.7 N•m [5 to 6 in-lb]
- STC Top Stop injector recheck limits ..... 0.00 to 0.05 mm [0.000 to 0.002 in lash]

Fuel System

NOTE: For performance and fuel rate values, refer to the engine data sheet, or the fuel pump code for the particular model involved.

Maximum Allowable Restriction to Pump:

- With Clean Filter ..... 100 mm Hg [4 in Hg]
- With Dirty Filter ..... 200 mm Hg [8 in Hg]

Maximum Allowable Return Line Restriction ..... 63 mm Hg [2.5 in Hg]

Maximum Allowable Return Line Restriction
with Check Valves and/or Overhead Tanks ..... 165 mm Hg [6.5 in Hg]

Minimum Allowable Fuel Tank Vent Capability ..... 0.85 m^3/h [30 ft^3/hr]

Lubricating Oil System

Oil Pressure

Oil Pressure, Main Oil Rifle (15W40 oil at 107°C [225°F]:
At idle (minimum allowable) ..... 70 kPa [10 psi]
At no load governed speed ..... 240 to 310 kPa [35 to 45 psi]

Oil Filter Capacity

Bypass filter (spin-on) (LF777) ..... 2.65 liters [0.7 U.S. gal]
Full flow filter (spin-on) (LF670) ..... 2.65 liters [0.7 U.S. gal]
Combination filter (LF3000) ..... 2.65 liters [0.7 U.S. gal]

Oil Pan Capacity:

- G-Drive .....28.4 to 36 liters [7.5 to 9.5 U.S. gal.]
- Other applications.....26 to 34 liters [7.0 to 9.0 U.S. gal.]

Total System Capacity

Total system capacity is the summation of the oil pan capacity at the high mark on the dipstick, the full flow oil filter capacity, and the capacity of any bypass filters that are used.

Cooling System

Coolant capacity (Engine only)
- NTA855 ..... 21 liters [22 U.S. qts.]
- NT855 ..... 19 liters [20 U.S. qts.]

Standard modulating thermostat-range ..... 79° to 91°C [175° to 195°F]

Maximum coolant pressure (pressure cap removed) ..... 241 kPa [35 psi]

Maximum allowable top tank temperature ..... 95°C [203°F]

Minimum recommended top tank temperature
- Construction/Industrial ..... 100°C [212°F]
- G-Drive ..... 104°C [220°F]

Maximum allowable deaeration time ..... 25 minutes

Minimum allowable drawdown or 20% of system capacity (whichever is greater) ..... 10.4 liters [11 U.S. qts.]

Minimum allowable pressure cap ..... 48 kPa [7 psi]

Air Intake System

NOTE: Engine intake air **must** be filtered to prevent dirt and debris from entering the engine. If intake air piping is damaged or loose, unfiltered air will enter the engine and cause premature wear.

Metric [U.S. Customary]

Maximum Intake restriction:
- Clean air filter element
  - Normal duty air cleaner ..... 254 mm H_20 [10.0 in H_20]
  - Heavy duty air cleaner ..... 381 mm H_20 [15.0 in H_20]
- Dirty air filter element ..... 635 mm H_20 [25.0 in H_20]

Exhaust System

Maximum back pressure ..... 75 mm Hg [3.0 in Hg]

Normal exhaust pipe diameter ..... 127 mm [5 inches]

Compressed Air System

Single Cylinder Air Compressor

Cylinders 1

Compressor Capacity @ 1250 RPM ..... 6.2 L per sec. [13.20 CFM]

Piston Displacement ..... 296 C.C. [18.6 C.I.]

Bore ..... 92.08 mm [3.625 inch] stroke ..... 44.45 mm [1.750 in]

Speed ..... Engine Speed

Cooling ..... Engine Coolant

Lubrication ..... Engine Lubricating Oil

Plumbing Line Sizes:
- Coolant Inlet and Outlet (Pipe Fitting) ..... 9.53 mm NPTF [0.375 inch NPTF]
- Air Inlet (Inside Diameter) ..... 22.22 mm [0.875 in]
- Air Outlet (Minimum Inside Diameter ..... 12.7 mm [0.50 in]

Height, Overall (approximate) ..... 31.1 cm [12.25 in]

Width, Overall (approximate) ..... 14.6 cm [5.75 in]

Length, Overall (approximate) ..... 22.9 cm [9.00 in]

Weight (approximate) ..... 18 Kg [40.0 lbs]

Two Cylinder Air Compressor

Cylinders 2

Compressor Capacity @ 1250 RPM ..... 14.2 L per sec. [30.00 CFM]

Piston Displacement ..... 676 C.C. [41.3 C.I.]

Bore ..... 92.08 mm [3.625 in]

Stroke ..... 50.8 mm [2.00 in]

Speed ..... Engine Speed

Cooling ..... Engine Cooling

Lubrication ..... Engine Lubricating Oil

Plumbing Line Sizes:
- Coolant Inlet and Outlet (Pipe Fitting) ..... 9.53 mm NPTF [0.375 inch NPTF]
- Air Inlet (Inside Diameter) ..... 22.22 mm [0.875 in]
- Air Outlet (Minimum Inside Diameter) ..... 15.88 mm [0.625 in]

Height, Overall (approximate) ..... 34.3 cm [13.50 in]

Width, Overall (approximate) ..... 17.8 cm [7.00 in]

Length, Overall (approximate) ..... 28.7 cm [11.30 in]

Weight (approximate) ..... 33.5 Kg [74.50 lbs]

Electrical System

Minimum battery capacity @ -18 to 0°C [0 to 32°F] ambient temperature
- 12-volt starter 400 ampere hour ..... 1800 cold cranking amps @ -18°C [0°F]
- 24-volt starter 200 ampere hour ..... 900 cold cranking amps @ -18°C [0°F]

Minimum battery capacity above 0°C [32°F] ambient temperature
- 12-volt starter 300 ampere hour ..... 1280 cold cranking amps @ -18°C [0°F]
- 24-volt starter 150 ampere hour ..... 640 cold cranking amps @ -18°C [0°F]

Maximum starting circuit resistance
- 12-volt starter ..... 0.00075 ohms
- 24-volt starter ..... 0.00200 ohms

Battery cable sizes - American wire gauge (Maximum length in cranking motor circuit)

12-volt
- No. 00 ..... 3.7 meters [12 ft]
- No. 000 ..... 4.9 meters [16 ft]
- No. 0000 or two No. 0* ..... 6.1 meters [20 ft]
- Two No. 00 ..... 7.6 meters [25 ft]

12-volt High Output
- No. 00 ..... 2.1 meters [7 ft]
- No. 000 ..... 2.7 meters [9 ft]
- No. 0000 or two No. 0* ..... 3.7 meters [12 ft]
- Two No. 00 ..... 4.3 meters [14 ft]

24 to 32-volt
- No. 00 ..... 6.1 meters [20 ft]
- No. 000 ..... 8.2 meters [27 ft]
- No. 0000 or two No. 0* ..... 10.7 meters [35 ft]
- Two No. 00 ..... 13.7 meters [45 ft]

Minimum ambient temperature without starting aid ..... Refer to engine data sheet.

Minimum cranking speed without starting aid ..... 100 RPM

* Two strands of No. 0 cable can be used in place of one No. 0000 cable providing all connections are carefully made to ensure equal current flow in each parallel cable.

Minimum Recommended Battery Capacity

System Voltage	Ambient Temperature			
	-18°C [0°F]		0°C [32°F]	
	Cold Cranking Amperes	Reserve Capacity* Amperes	Cold Cranking Amperes	Reserve Capacity* Amperes
12 Volt	1800	640	1280	480
24 Volt**	900	320	640	240

* Note: The number of plates within a given battery size determines reserve capacity. Reserve capacity determines the length of time sustained cranking can occur.

** CCA ratings are based on two, 12 volt batteries in series.

Batteries (Specific Gravity)

Battery State of Charge	Specific Gravity @ 27°C [80°F]
100%	1.260-1.280
75%	1.230-1.250
50%	1.200-1.190
25%	1.170-1.190
Discharged	1.110-1.130

Fuel Recommendations/Specifications

Warning: Do NOT mix gasoline or alcohol with diesel fuel. This mixture can cause an explosion.

Cummins Engine Company, Inc. recommends the use of ASTM No. 2 D fuel. The use of No. 2 diesel fuel will result in optimum engine performance. At operating temperatures below 0°C [32°F], acceptable performance can be obtained by using blends of No. 2 D and No. 1 D. The use of lighter fuels can reduce fuel economy.

The viscosity of the fuel **must** be kept above 1.3 cSt at 100°C [212°F] to provide adequate fuel system lubrication.

For a more detailed description of fuel properties, refer to Fuel For Cummins Engines, Bulletin No. 3379001. See ordering information in the back of this manual.

Lubricating Oil Recommendations/Specifications

The use of high quality engine lubricating oils combined with appropriate oil drain and filter change intervals is a critical factor in maintaining engine performance and obtaining maximum engine life.

Cummins Engine Company, Inc. strongly recommends the use of a high quality SAE 15W-40 heavy duty engine oil (such as Cummins Premium Blue) which meets the American Petroleum Institute (API) performance classification CE or CF-4.

NOTE: CD or CD/SF engine oils can be used in areas where CE and CF-4 oil is **not** yet available.

A sulfated ash content of 1.0 mass percent will yield optimal control of valve and piston deposit and will minimize oil consumption. The sulfated ash **must not** exceed 1.85 percent mass.

For further details and discussion of engine lubricating oils for Cummins engines, refer to Bulletin No. 3810340, Cummins Engine Oil Recommendations, and Bulletin No. 3810375, Use of CE Engine Oils in Cummins Engines.

Additional information regarding lubricating oil availability throughout the world is available in the E.M.A. Lubricating Oils Data Book for Heavy Duty Automotive and Industrial Engines. The data book can be ordered from the Engine Manufacturers Association, One Illinois Center, 111 East Wacker Drive, Chicago, IL U.S.A. 60601. The telephone number is: (312) 644-6610.

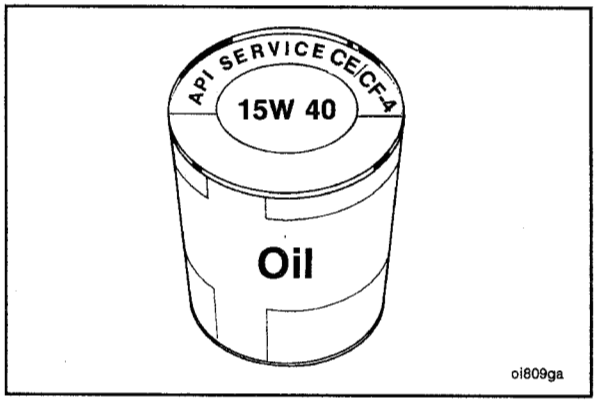

The API service symbols are shown in the accompanying illustration. The upper half of the symbol displays the appropriate oil categories; the lower half can contain words to describe oil energy conserving features. The center section identifies the SAE oil viscosity grade.

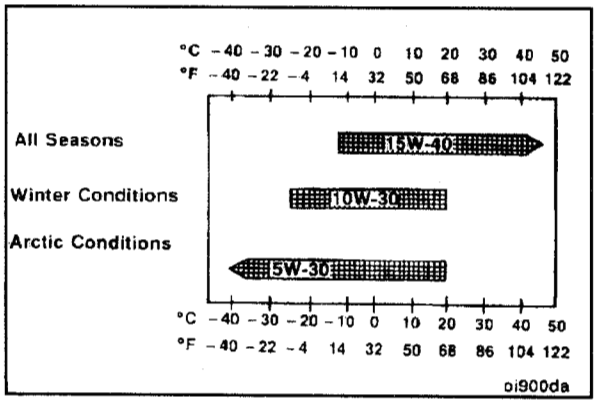

Caution: The use of low viscosity oils, such as 10W or 10W-30, can be used to aid in starting the engine and in providing sufficient oil flow at ambient temperatures below -5°C [23°F]. Continuous use of low viscosity oils can decrease engine life due to wear.

Arctic Operation

If an engine is operated in ambient temperatures consistently below -23°C [-10°F] and there are no provisions to keep the engine warm when it is **not** in operation, use a synthetic CE/SF engine oil with adequate low temperature properties such as 5W-20 or 5W-30.

The oil supplier **must** be responsible for meeting the performance service specifications.

Caution: The use of a synthetic base oil does not justify extended oil change intervals. Extended oil change intervals can decrease engine life due to factors such as corrosion, deposits, and wear.

New Engine Break-In Oils

Special "break-in" engine lubricating oils are **not** recommended for new or rebuilt Cummins engines. Use the same type oil during the "break-in" as that which is used in normal operation.

Caution: A sulfated ash limit of 1.85 percent has been placed on all engine lubricating oils recommended for use in Cummins engines. High ash oils can cause valve and/or piston damage and lead to excessive oil consumption.

Additional information regarding lubricating oil availability throughout the world is available in the E.M.A. Lubricating Oils Data Book for Heavy Duty Automotive and Industrial Engines. The data book can be ordered from the Engine Manufacturers Association, One Illinois Center, 111 East Wacker Drive, Chicago, IL U.S.A. 60601. The telephone number is: (312) 644-6610.

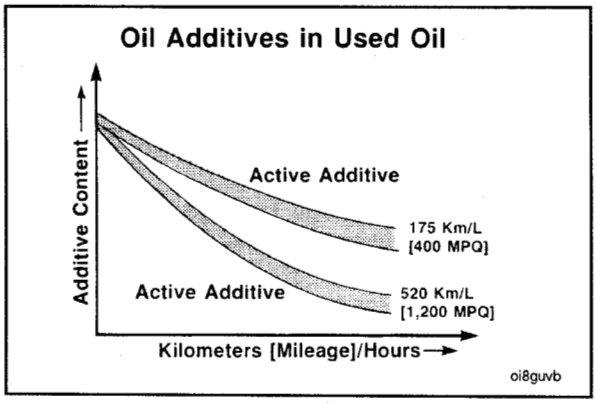

Oil Change Interval

As the engine oil becomes contaminated, essential oil additives are depleted. Lubricating oils protect the engine as long as these additives are functioning properly. Progressive contamination of the oil between oil and filter change intervals is normal. The amount of contamination will vary depending on the operation of the engine, hours or miles on the oil, fuel consumed, and new oil added.

Extending the oil and filter change intervals beyond the recommendations will decrease engine life due to factors such as corrosion, deposits, and wear.

Refer to the chart on the next page to determine which oil drain interval to use for your application.

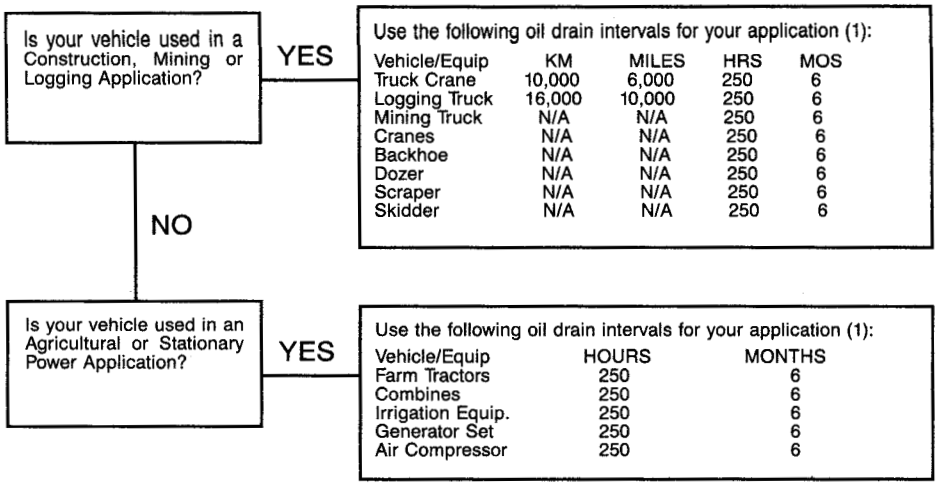

Use the following oil drain intervals for your application (1):

Vehicle/Equip	KM	MILES	HRS	MOS
Truck Crane	10,000	6,000	250	6
Logging Truck	16,000	10,000	250	6
Mining Truck	N/A	N/A	250	6
Cranes	N/A	N/A	250	6
Backhoe	N/A	N/A	250	6
Dozer	N/A	N/A	250	6
Scraper	N/A	N/A	250	6
Skidder	N/A	N/A	250	6

Use the following oil drain intervals for your application (1):

Vehicle/Equip	HOURS	MONTHS
Farm Tractors	250	6
Combines	250	6
Irrigation Equip.	250	6
Generator Set	250	6
Air Compressor	250	6

(1) Or whichever comes first

Lubricating Oil Filter Specifications

Cummins Engine Company, Inc. requires a lubricating oil filter(s) be used that meets the specifications given in the table below.

Lubricating Oil Filter Specifications

Per Cummins Source Approval Method (SAM)	Combo (LF3000) 10,634	Full Flow (LF670) 10,509	Bypass (LF777) 10,547
Flow vs. Restriction			
• Pressure differential at 40 GPM maximum	21 kPa [3 psi]	21 kPa [3 psi]	N/A
Element Collapse			
• Pressure differential	1034 kPa [150 psi]	1034 kPa [150 psi]	1034 kPa [150 psi]
Partical Retention			
• Absolute retention, percent of 40 micrometre and above, minimum	N/A	100%	N/A
• Percent retention of 20 to 30 micrometre	N/A	95%	N/A
Hydrostatic Pressure			
• Pressure, minimum	1724 kPa [250 psi]	1724 kPa [250 psi]	1724 kPa [250 psi]

Coolant Recommendations/Specifications

Heavy duty diesel engines require a ''heavy duty coolant''. Heavy duty coolant is defined as a correct mixture of good quality water, low silicate antifreeze and supplemental coolant additives (SCA's).

The following pages will give an explanation of water, antifreeze, and SCA's, and the correct way to mix them. They will also explain how to test antifreeze and SCA levels.

This section also contains information on cooling system maintenance and a coolant treatment chart that is used to determine the correct DCA4 service filters and liquid pre-charge.

Water Quality	
Calcium Magnesium (Hardness)	170 PPM as ($CaC0_3$ + $MgC0_3$)
Chloride	40 PPM as (C1)
Sulfur	100 PPM as (SO_4)

Heavy Duty Coolant

Water

Water quality is important for cooling system performance. Excessive levels of calcium and magnesium contribute to scaling problems, and excessive levels of chlorides and sulfates cause cooling system corrosion.



Antifreeze

Cummins/Fleetguard® recommends using a low-silicate antifreeze concentrate that meets ASTM D4985 specifications (less than 0.10% silicate, expressed as Na_2Si0_3

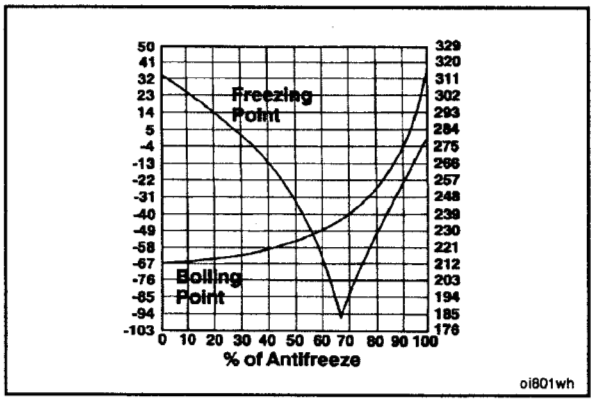

Low-silicate antifreeze **must** be mixed with quality water at a 50/50 ratio (40 to 60% working range). A 50/50 mixture of antifreeze and water gives a -34°F freeze point and a boiling point of 228°F, which is adequate for locations in North America. The actual lowest freeze point of ethylene glycol antifreeze is at 68%. Using higher concentrations of antifreeze will raise the freeze point of the solution and increase the possibility of a silicate gel problem.

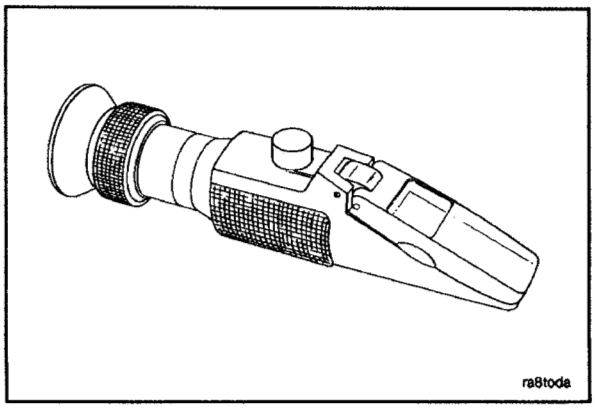

A refractometer **must** be used to accurately measure the freeze point of the coolant.

Do **not** use a floating ball hydrometer. Floating ball hydrometers will give incorrect readings.

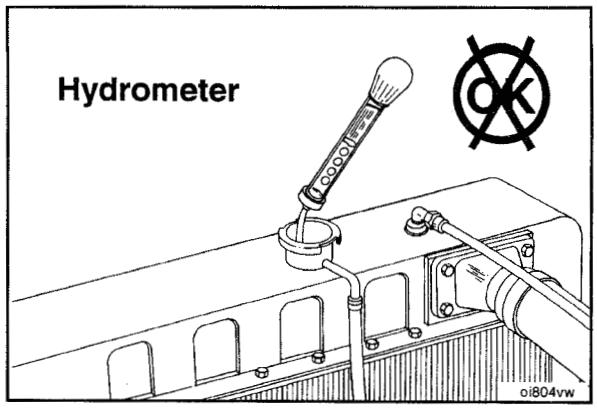

Cooling System Sealing Additives

Do **not** use sealing additives in the cooling systems. The use of sealing additives will:

- Build up in coolant low flow areas.
- Clog coolant filters.
- Plug radiator and oil cooler.

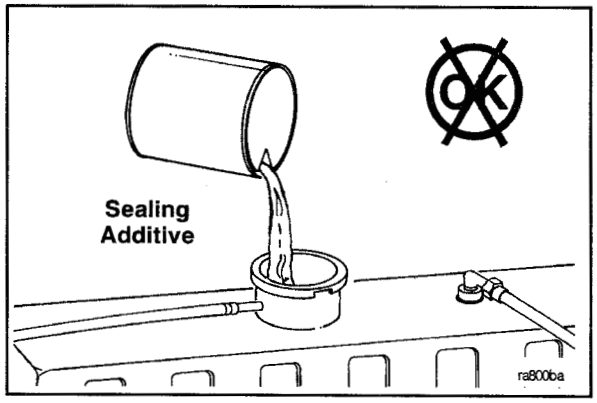

Cooling System Soluble Oils

Do **not** use soluble oils in the cooling systems. The use of soluble oils will:

- allow cylinder liner pitting,
- corrode brass and copper,
- damage heat transfer surfaces, and
- damage seals and hoses

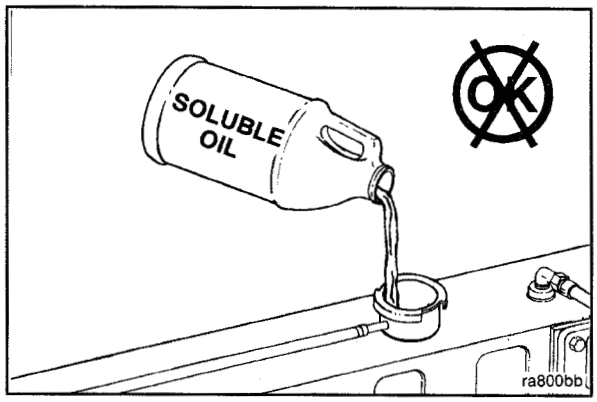

Supplemental Coolant Additives (SCA's)

Correct use of SCA's in conjunction with water and antifreeze are needed to protect engines from cooling system problems. The system **must** be pre-charged with the correct concentration of SCA.

Cummins/Fleetguard® uses the SCA unit to define the required concentration level to protect against liner pitting.

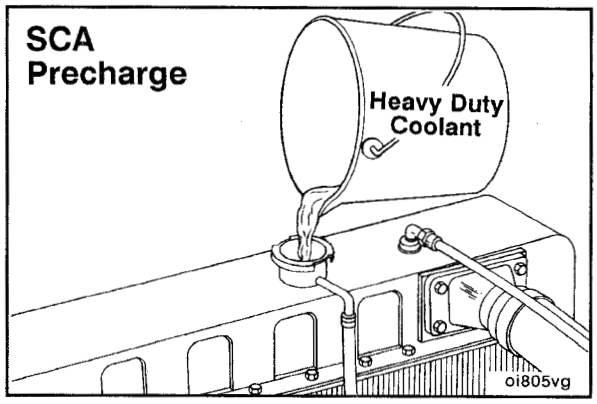

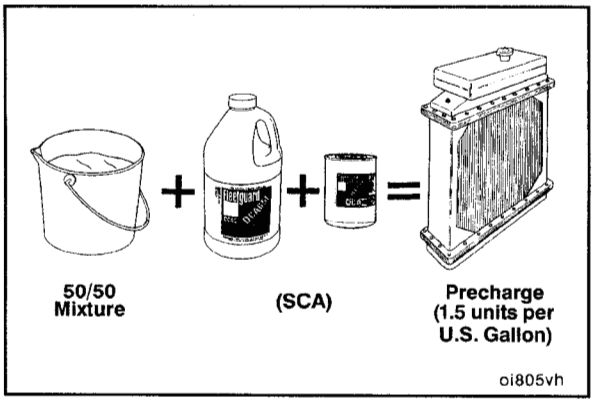

When coolant is replaced in the field, it **must** be replaced with **Heavy Duty Coolant** pre-charged with SCA's. In addition, a service coolant filter **must** be installed. Together, this will result in a total pre-charge of approximately 1.5 SCA units per gallon of coolant.

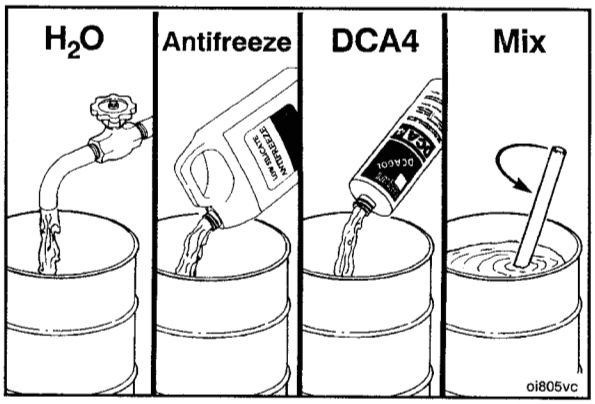

Coolant Blending/Mixing

Proper blending of **Heavy Duty Coolant** requires:

- Pour water into the container
- Add low-silicate antifreeze
- Add DCA4 liquid
- Thoroughly blend the components

Following the correct order for mixing the **Heavy Duty Coolant** will prevent additive dropout during the mixing process.

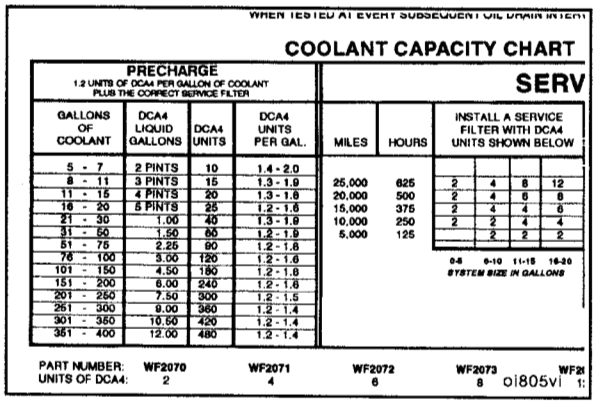

WHEN TESTED AT EVERY SUBSEQUENT OIL DRAIN INTERV

COOLANT CAPACITY CHART

PRECHARGE 1.2 UNITS OF DCA4 PER GALLON OF COOLANT PLUS THE CORRECT SERVICE FILTER				SERV					
GALLONS OF COOLANT	DCA4 LIQUID GALLONS	DCA4 UNITS	DCA4 UNITS PER GAL.	MILES	HOURS	INSTALL A SERVICE FILTER WITH DCA4 UNITS SHOWN BELOW			
5 - 7	2 PINTS	10	1.4 - 2.0						
8 - 11	3 PINTS	15	1.3 - 1.9	25,000	625	2	4	6	12
11 - 15	4 PINTS	20	1.3 - 1.8	20,000	500	2	4	6	8
16 - 20	5 PINTS	25	1.2 - 1.6	15,000	375	2	4	4	6
21 - 30	1.00	40	1.3 - 1.9	10,000	250	2	2	4	4
31 - 50	1.50	60	1.2 - 1.9	5,000	125		2	2	2
51 - 75	2.25	90	1.2 - 1.8			0-5	6-10	11-15	16-20
76 - 100	3.00	120	1.2 - 1.6			SYSTEM SIZE IN GALLONS			
101 - 150	4.50	180	1.2 - 1.8						
151 - 200	6.00	240	1.2 - 1.6						
201 - 250	7.50	300	1.2 - 1.5						
251 - 300	9.00	360	1.2 - 1.4						
301 - 350	10.50	420	1.2 - 1.4						
351 - 400	12.00	480	1.2 - 1.4						

PART NUMBER:	WF2070	WF2071	WF2072	WF2073	WF2
UNITS OF DCA4:	2	4	6	8	1:

oi805vl

This chart, shown later in this document, **must** be followed to determine how much liquid SCA **must** be added to pre-charge different quantities of make-up coolant (water and low-silicate antifreeze). **Remember, a service filter must also be installed.**

In addition to using the chart as shown, the system requirements can be also calculated as shown in the following examples.

NOTE: It is important to know the cooling system capacity. If **not** sure of system capacity, contact the equipment OEM.

The following two examples illustrate how to calculate the required SCA quantity to add to the coolant to reach the desired concentration level.

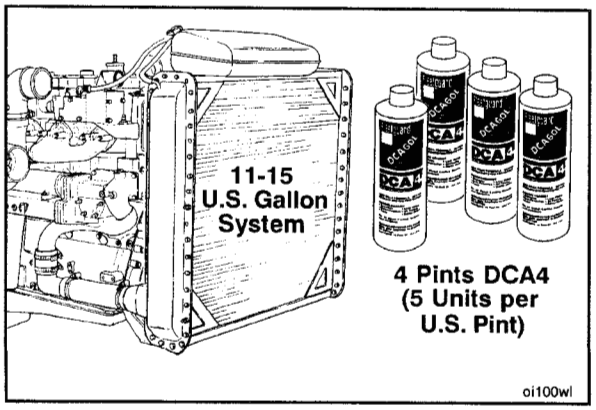

When mixing 11 to 15 gallons of **Coolant**, 4 pints of DCA4 liquid **must** be added to obtain the correct SCA concentration level.

$$15 \text{ gallons} \times \frac{1.5 \text{ units}}{\text{gallon}} = 22.5 \text{ units}$$

$$22.5 \text{ units} \div \frac{5 \text{ units}}{\text{pint DCA4}} = 4.5 \text{ pints DCA4}$$

or approximately 4 pints of DCA4

For an 80-gallon system, three (3) gallons of DCA4 liquid **must** be added to pre-charge the coolant to the correct SCA concentration level.

Example:

80 gallons X $\frac{1.5 \text{ units}}{\text{gallon}}$ = 120 units

120 units ÷ $\frac{20 \text{ units}}{1/2 \text{ gallons DCA4}}$ = 6 half gallon containers of DCA4

or 3 gallons of DCA4

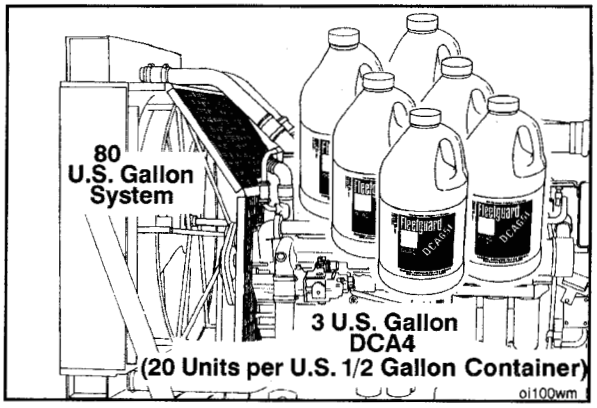

Fleetguard® DCA4 Service Filters and Liquid Pre-Charge

Fleetguard® Part No. DCA4 Spin-On Coolant Filters	Cummins Part No.	DCA4 Units
WF-2070	3318157	2
WF-2071	3315116	4
WF-2072	3318201	6
WF-2073	3315115	8
WF-2074	3316053	12
WF-2075	3318318	15
WF-2076	3318319	23
DCA4 Liquid		
DCA60L (1 pint)	3315459	5
DCA65L (1/2 gallon)	3305373	20
DCA75L (5 gallons)	3317428	200
DCA80L (55 gallons)		2200
DCA4 Power		
DCA95	3318320	20

Coolant Treatment Chart

Precharge Replace the Service Filter and Add 1.2 Units of DCA4 Per Gallon of Coolant			
Gallons of Coolant	DCA4 Liquid Gallons	DCA4 Units	DCA4 Units Per Gal.
5 - 7	2 Pints	10	1.4 - 2.0
8 - 11	3 Pints	15	1.3 - 1.9
11 - 15	4 Pints	20	1.3 - 1.8
16 - 20	5 Pints	25	1.2 - 1.6
21 - 30	1.00	40	1.3 - 1.9
31 - 50	1.50	60	1.2 - 1.9
51 - 75	2.25	90	1.2 - 1.8
76 - 100	3.00	120	1.2 - 1.6
101 - 150	4.50	180	1.2 - 1.8
151 - 200	6.00	240	1.2 - 1.6
201 - 250	7.50	300	1.2 - 1.5
251 - 300	9.00	360	1.2 - 1.4
301 - 350	10.50	420	1.2 - 1.4
351 - 400	12.00	480	1.2 - 1.4

Coolant Filter Service Interval					
System Size in Gallons	Install a Service Filter With DCA4 Units Shown Below				
0 to 5		2	2	2	2
6 to 10	2	2	4	4	4
11 to 15	2	4	4	6	8
16 to 20	2	4	6	8	12
	125	250	375	500	625
	Oil Drain Interval - Hours				

Notes:

A. Consult the vehicle equipment manufacturer's maintenance information for total cooling system capacity.

B. When draining and replacing the coolant, **always** pre-charge the cooling system to a SCA level of 1.5 units per gallon. This concentration level **must never** be allowed to go below 1.2 units and **must** be controlled when level is greater than 3 units. Action needed when level goes below 1.2 is a filter and liquid precharge; above 1.2 to 3.0 filter only; above 3.0, test and add filter when 3.0 and below.

NOTE: When performing service which requires draining the cooling system, take special precautions to collect it in a clean container, seal it to prevent contamination, and save for reuse.

C. Change coolant filters at each oil change to protect the cooling system. The service filter listed above is satisfactory for use with maintenance intervals from 250 to 600 hours.

Caution: Under NO circumstances must a customer exceed one oil change interval before adding chemicals (by filter or liquid) to the coolant. If the recommended service intervals are neglected, there is a high probability that cylinder liner corrosion will occur.

Cooling System Maintenance

Supplemental Coolant Additives (DCA4), or equivalent, are required to protect the cooling system from fouling, solder blooming, and general corrosion. The cooling filter is required to protect the coolant system from abrasive materials, debris, and precipitated coolant additives.

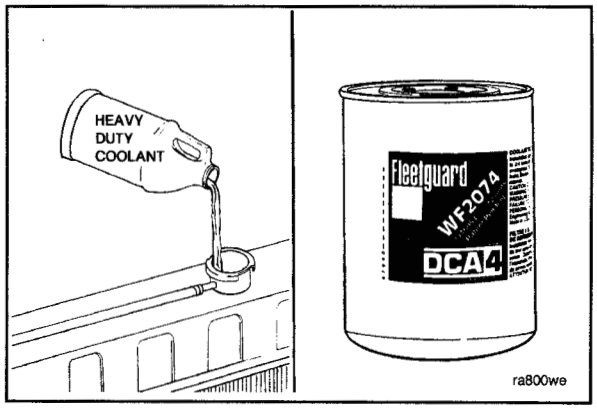

NOTE: Cummins Engine Company requires that a service filter be used and SCA liquid added when the coolant is changed or a significant (more than 50 percent) coolant loss occurs. A service filter **must** be used during the normal oil change interval.

Diesel Coolant Additives (or equivalent) are used to prevent liner pitting, corrosion, and scale deposits in the cooling system.

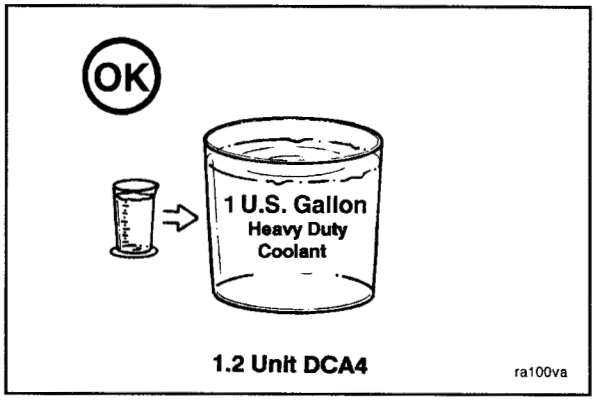

After changing the coolant, the initial charge of DCA4 (or equivalent) concentration **must** be 1.5 unit per 3.8 liters [1 U.S. gallon] of coolant in the system.

NOTE: The cooling system **must** be clean before adding DCA4 (or equivalent).

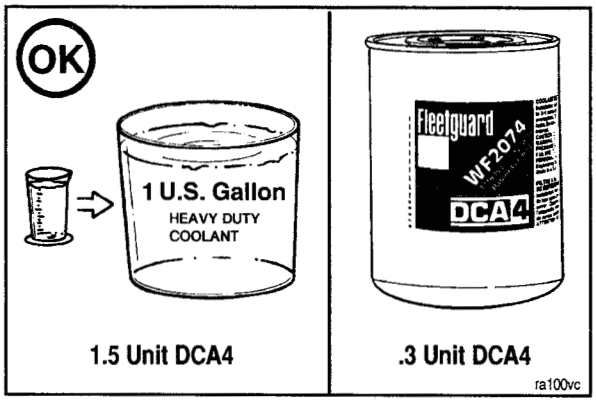

The DCA4 concentration **must not** fall below 1.2 units or exceed 3 units per gallon of cooling system capacity.

If make-up coolant is added between intervals, additional DCA4 (or equivalent) will be required. Any coolant added **must** be pre-mixed with DCA4 to a concentration of 1.2 units per 3.8 liters [1 U.S. gallon] of coolant. With the service filter installed, the total system concentration **must** be 1.5 units DCA4 per gallon of coolant.

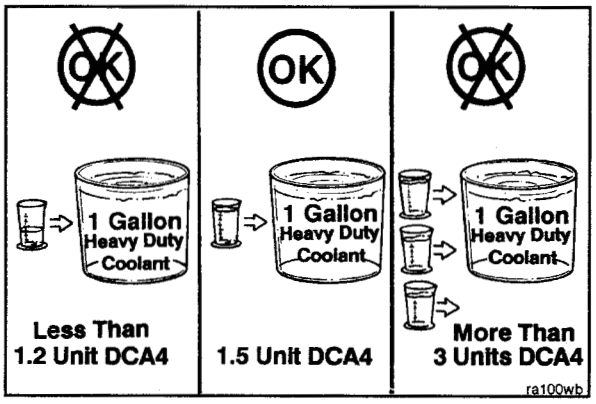

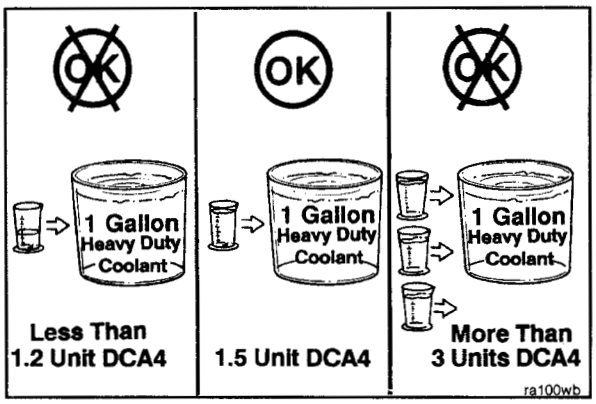

Caution: Insufficient concentration of the coolant additive will result in liner pitting and engine failure.

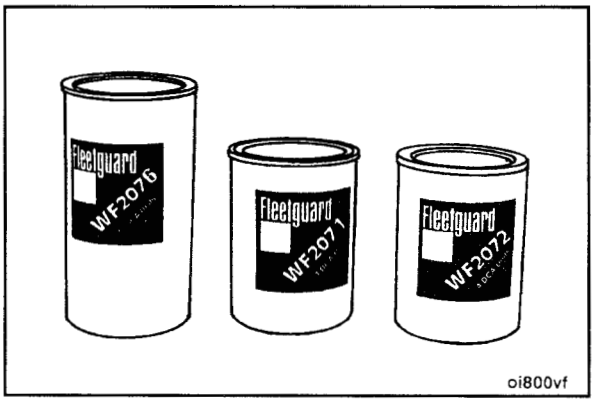

Use the correct Fleetguard® coolant filter to maintain the recommended DCA4 concentration in the system.

Maintain the correct concentration by changing the service coolant filter at each oil drain interval.

NOTE: The correct filter is determined by the total cooling system capacity and oil drain interval.

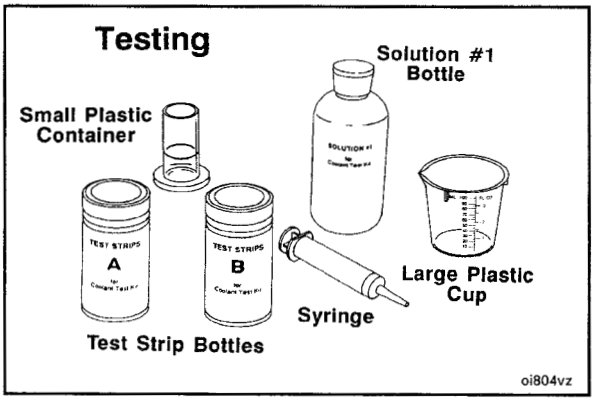

Testing SCA Concentration Level CC-2626 Test Kit

Carefully follow the instructions to test the coolant and take the appropriate action recommended by the kit.

Precautions:

DO	Don't
Do carry out testing in a well-lighted area.	**Don't** handle pad ends of strip.
Do make sure that hands are dry before removing strips from bottles.	**Don't** allow pad ends of wet strips to touch during testing.
Do allow coolant sample to reach room temperature for best results.	**Don't** get solution in eyes or on skin and clothing.
Do make sure that pad ends of strips are dipped.	**Don't** allow contamination of the strips and solution bottles.
Do replace and tighten caps on strip bottles to avoid getting moisture on strips.	**Don't** allow contamination of the plastic containers during testing.
Do make sure that all plastic containers are rinsed with water after each use to avoid contamination.	**Don't** use kits beyond expiration date.

Any variation to the technique listed below will give false readings resulting in incorrect service action.

Instructions For Proper Kit Use

1. Fill large plastic cup at least half full with coolant.
2. With syringe, draw coolant sample to the stop point and dispense into small plastic container.
3. Hold small plastic container at eye level and fill to the black line with Solution No. 1, then swirl to mix. (Note: Many coolants will become cloudy at this point which is normal.)
4. Dip strip A into solution for 1 to 2 seconds, remove and shake vigorously to remove excess coolant. This action is much like shaking down a thermometer. Lay strip A down on a clean surface and read after reading strip B.
5. Dip strip B into solution for 1 to 2 seconds, shake vigorously, wait 30 seconds and match to nearest color on the test kit chart within the next 30 seconds. If **not** sure of exact color, read to the left or lower concentration.
6. Read strip A the same as strip B.
7. Determine the intersecting block of strips A and B on the chart, and follow requirements listed above under Testing DCA4.
8. Clean all plastic containers by rinsing cups and filling or flushing syringe with tap water after each use.

When to Test

- When Not Sure of SCA Level
- Twice a Year
- When Over 3 Units Per Gallon of SCA

Test Intervals

Testing is recommended if the operator is **not** sure of the cooling system condition due to leaks, uncontrolled topping off of the system, or major coolant loss.

Testing is also recommended twice a year to monitor the SCA level. If the SCA level is above 3 units, test at subsequent oil drain intervals until the concentration is back under 3 units. When the concentration is back under 3 units, start installing service filters at each drain interval.

Below 1.2 Units

- Replace Service Filter
- Pre-charge With Liquid

If the concentration is below 1.2 units per gallon, replace the filter and pre-charge with liquid.

1.2 to 3 Units

- Replace Service Filter

If the concentration is 1.2 to 3 units per gallon, replace the filter.

Above 3 Units

- Do Not Replace Service Filter
- Test at Every Oil Change

If the concentration is above 3 units per gallon, do **not** replace the service filter. Test the coolant at subsequent oil drain intervals until the concentration is back under 3 units. When the concentration is back under 3 units, start installing service filters at each oil change interval.

NOTE: Do **not** utilize the test kit to maintain minimum SCA concentration levels (i.e., 1.5 units).

NOTE: In some instances, the A or B reading can be high. However, it is the combined reading that is important. **So, always follow the chart.**

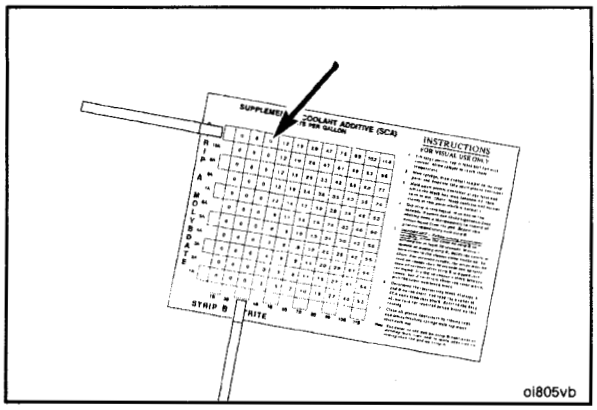

The following coolant testing devices are available to assist in determining the condition of the coolant:

CC2626 Coolant Test Kit – Works with any SCA formulation (Call 1-800-521-4005 if you have this test kit and the color chart does not show the number of units of DCA per gallon of coolant. A new chart will be mailed to you. The new chart will allow you to use your existing test kit with the new service requirements detailed on the reverse side of this paper.)

Probalizer:

3318169S Plug – Installs on the engine for easy coolant sampling
3318168S Cap – Use with Monitor C bottle to sample coolant

CC2706 Monitor C – Lab analysis of coolant samples

Call the following numbers to get answers to any questions you may have about cooling system maintenance.

Cummins: 1-800-343-7357 Fleetguard: 1-800-521-4005

Drive Belt Tension Chart

To measure belt tension with a gauge, use the Belt Tension Chart to select the correct gauge for the belt width.

Belt Tension Specifications						
SAE Belt Size	Belt Tension Gauge Part No.		New Belt Installation Tension		*Used Belt Tension Limits	
in.	Click-type	Burroughs	N	lbf	N	lbf
0.380 in.	3822524	N/A	620	140	270 to 490	60-110
0.440 in.	3822524	N/A	620	140	270 to 490	60-110
1/2 in.	3822524	ST-1138	620	140	270 to 490	60-110
11/16 in.	3822524	ST-1138	620	140	270 to 490	60-110
3/4 in.	3822524	ST-1138	620	140	270 to 490	60-110
7/8 in.	3822524	ST-1138	620	140	270 to 490	60-110
4 rib	3822524	ST-1138	620	140	270 to 490	60-110
5 rib	3822524	ST-1138	670	150	270 to 530	60-120
6 rib	3822525	ST-1293	710	160	290 to 580	65-130
8 rib	3822525	ST-1293	890	200	360 to 710	80-160
10 rib	3822525	3823138	1110	250	440 to 890	100-200
12 rib	3822525	3823138	1330	300	530 to 1070	120-240
16 rib L	N/A	3376344	2220	500	1110-2220	250-500
20 rib L	N/A	N/A	2670	600	1330-2670	300-600

* A belt is considered used if it has been in service for 10 minutes or longer.
* If used belt tension is less than the minimum value, tighten the belt to the maximum value.

Capscrew Markings and Torque Values

Caution: When replacing capscrews, always use a capscrew of the same measurement and strength as the capscrew being replaced. Using incorrect capscrews can result in engine damage.

SAE capscrews are graded according to the strength of the capscrew. They are marked on the head so the correct strength and torque are known.

The following examples indicate how capscrews are identified:

U.S. Customary [5/16 X 18 X 1-1/2]		
5/16	18	1-1/2
Major Thread Diameter in Inches	Number Threads per Inch	Length in Inches

NOTES:

1. **Always** use the torque values listed in the following table when specific torque values are **not** available.
2. Do **not** use the torque values in place of those specified in other sections of this manual. It is important to use the correct torque values for SAE grade 5 and 8 capscrews.
3. The torque values in the table are based on the use of lubricated threads.

Capscrew Markings and Torque Values - U.S. Customary

SAE Grade Number 5 8

Capscrew Head Markings

These are all SAE Grade 5 (3) line





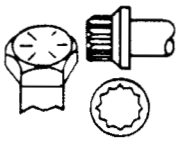

Capscrew Body Size	Capscrew Torque - Grade 5 Capscrew				Capscrew Torque - Grade 8 Capscrew			
	Cast Iron		Aluminum		Cast Iron		Aluminum	
	N•m	ft-lb	N•m	ft-lb	N•m	ft-lb	N•m	ft-lb
1/4 - 20	9	7	8	6	15	11	12	9
- 28	12	9	9	7	18	13	14	10
5/16 - 18	20	15	16	12	30	22	24	18
- 24	23	17	19	14	33	24	25	19
3/8 - 16	40	30	25	20	55	40	40	30
- 24	40	30	35	25	60	45	45	35
7/16 - 14	60	45	45	35	90	65	65	50
- 20	65	50	55	40	95	70	75	55
1/2 - 13	95	70	75	55	130	95	100	75
- 20	100	75	80	60	150	110	120	90
9/16 - 12	135	100	110	80	190	140	150	110
- 18	150	110	115	85	210	155	170	125
5/8 - 11	180	135	150	110	255	190	205	150
- 18	210	155	160	120	290	215	230	170
3/4 - 10	325	240	255	190	460	340	365	270
- 16	365	270	285	210	515	380	410	300
7/8 - 9	490	360	380	280	745	550	600	440
- 14	530	390	420	310	825	610	660	490
1 - 8	720	530	570	420	1100	820	890	660
- 14	800	590	650	480	1200	890	960	710

Section S - Service Assistance

Section Contents

Page

Service Assistance S-2
Distributors and Branches - Australia S-20
Distributors and Branches - Canada S-18
Distributors and Branches - New Zealand S-23
Distributors and Branches - United States S-5
Distributors - International S-19
Division and Regional Offices S-4
Emergency Service S-2
Problem Solving S-3
Regional Offices - International S-16
Routine Service S-2

Service Assistance

Routine Service

Personnel at a Cummins Authorized Repair Location can assist you with the correct operation or service of your engine. We have a worldwide service network of more than 5,000 Cummins Distributors and Dealers who have been trained to provide sound advice, expert service, and complete parts support. Check the telephone directory yellow pages or refer to the directory in this section for the nearest Cummins Authorized Repair Location.

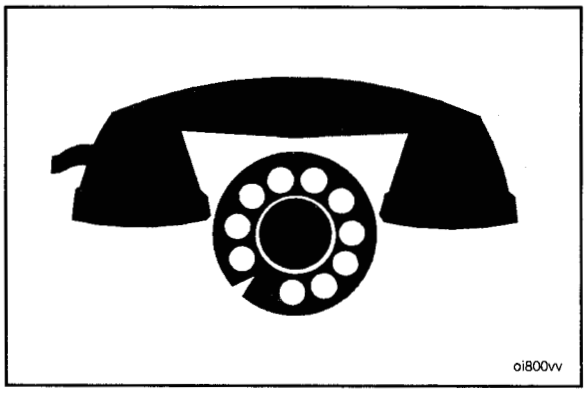

Emergency Service

The Cummins Customer Relations Department provides a 24-hour, toll free telephone number to aid in locating emergency service when a local Cummins Authorized Repair Location can **not** be reached. The emergency service telephone numbers are:

- United States and Canada (excluding Alaska and Hawaii)
  - (800) D-I-E-S-E-L-S
  - (800) 343-7357
- Outside of North America contact your Regional Office. Telephone numbers and addresses are listed in this section.

Problem Solving

Normally, any problem that arises with the sale, service, or repair of your engine can be handled by a Cummins Authorized Repair Location in your area. Refer to the telephone directory yellow pages for the one nearest you. If the problem has **not** been handled satisfactorily, follow the steps outlined below:

1. If the disagreement is with a Dealer, talk to the Cummins Distributor with whom he has his service agreement.
2. If the disagreement is with a Distributor, call the nearest Cummins Division or Regional Office; however, most problems are solved below the Division or Regional office level. Telephone numbers and addresses are listed in this section. Before calling, write down the following information:
   a. Engine model and serial number
   b. Type and make of equipment
   c. Total kilometers [miles] or hours of operation
   d. Warranty start date
   e. Nature of problem
   f. Summary of the current problem arranged in the order of occurrence
   g. Name and location of the Cummins Distributor or Dealer
3. If a problem can **not** be resolved satisfactorily through your Cummins Authorized Repair Location or Division Office, write to:

Customer Relations - 41403, Cummins Engine Company, Inc., Box 3005, Columbus, IN 47202-3005

Division and Regional Offices

NOTE: The following list contains offices in U.S., Canada, Australia, New Zealand, and Puerto Rico.

United States

Northern Division Office

Cummins Engine Company, Inc.
21 Southpark Blvd.
Greenwood, IN 46143
Telephone: (317) 885-4400

Southern Division Office

Cummins Engine Company, Inc.
425 Franklin Road
Suite 500
Marietta, GA 30067
Telephone: (404) 423-1108

Western Division Office

Cummins Engine Company, Inc.
5660 Greenwood Plaza Blvd.
Englewood, CO 80111
Telephone: (303) 773-2866

Western Regional Office

Cummins Engine Company, Inc.
569 First Street West
Sonoma, CA 95476
Telephone: (707) 935-3842

Plains Regional Office

Cummins Engine Company, Inc.
1901 Central Drive
Suite 356
Bedford, TX 76021
Telephone: (817) 267-3172

Canada

Canadian Division Office

Cummins Diesel of Canada, Ltd.
700 Dorval Drive
Suite 600
Oakville, Ontario L6K 3V3
Telephone: (416) 842-8070

Western Canada Regional Office

Cummins Diesel of Canada, Ltd.
18452 - 96th Avenue
Surrey, B.C. V4N 3P8
Telephone: (604) 882-5727

Eastern Canada Regional Office

Cummins Diesel of Canada Ltd.
800 Montee DeLiesse
Saint Laurent, Quebec H4T 1P3
Telephone: (514) 342-4042

Central Canada Regional Office

Cummins Diesel of Canada Ltd.
14755 - 121 A Avenue
Edmonton, Alberta T5L 2T2
Telephone: (403) 455-2151

Australia Regional Office

Cummins Diesel Australia

2 Caribbean Drive
Scoresby, Victoria 3179
Australia
Telephone: (61) 3-765-3222

NOTE: This office also serves New Zealand.

Cummins Americas Regional Office

Cummins Caribbean

16085 N. W. 52nd Avenue
Hialeah, FL 33014
Telephone: (305) 621-1300

NOTE: This office serves Puerto Rico and South America excluding Brazil.

Distributors and Branches - United States

Alabama

Birmingham Distributor

Cummins Alabama, Inc.
2200 Pinson Highway
P.O. Box 1147
Birmingham, AL 35201
Telephone: (205) 841-0421

Mobile Branch

Cummins Alabama, Inc.
1924 Beltline Highway,
I-65 North
P.O. Box 2566
Mobile, AL 36601
Telephone: (205) 456-2236

Mobile Onan/Marine Branch

Cummins Alabama, Inc.
Cummins/Onan/Power Systems Center
3422 Georgia Pacific Avenue
Mobile, AL 36617
Telephone: (205) 452-6426

Montgomery Branch

Cummins Alabama, Inc.
2325 West Fairview Avenue
P.O. Box 9271
Montgomery, AL 36108
Telephone: (205) 263-2594

Alaska

Anchorage - (Branch of Seattle)

Cummins Northwest, Inc.
2618 Commercial Drive
Anchorage, AK 99501-3095
Telephone: (907) 279-7594

Arizona

Phoenix Distributor and Branch

Cummins Southwest, Inc.
2239 North Black Canyon Hwy.
P.O. Box 6688
Phoenix, AZ 85005-6688
Telephone: (602) 252-8021

Phoenix Generator Branch

Cummins Southwest, Inc.
Power Systems Division
2222 N. 23rd Drive
Phoenix, AZ 85009
Telephone: (602) 252-8021

Tucson Branch

Cummins Southwest, Inc.
1912 West Prince Road
Tucson, AZ 85705
Telephone: (602) 887-7440

Arkansas

Little Rock - (Branch of Memphis)

Cummins Mid-South, Inc.
6600 Interstate 30
Little Rock, AR 72209
Telephone: (Sales): (501) 569-5600
(Service): (501) 569-5656
(Parts): (501) 569-5613

California

San Leandro Distributor

Cummins West, Inc.
1601 Aurora Drive
San Leandro, CA 94577
Telephone: (510) 351-6101

Bakersfield Branch

Cummins West, Inc.
301 East Fourth Street
Bakersfield, CA 93307
Telephone: (805) 325-9404

Hayward Distribution Center

Cummins West, Inc.
788 Sandoval Way
Hayward, CA 94544
Telephone: (510) 351-6101

Los Angeles Distributor

Cummins Cal Pacific Inc.
1939 Deere Avenue (Irvine)
Irvine, CA 92714
Telephone: (714) 756-8700

Montebello Branch

Cummins Cal Pacific Inc.
1105 South Greenwood Avenue
Montebello, CA 90640
Telephone: (213) 728-8111

Rialto Branch

Cummins Cal Pacific Inc.
3061 S. Riverside Avenue
Rialto, CA 92377
Telephone: (909) 877-0433

San Diego Branch

Cummins Cal Pacific Inc.
310 N. Johnson Avenue
El Cajon, CA 92020
Telephone: (619) 593-3093

San Leandro Branch

Cummins West, Inc.
1601 Aurora Drive
San Leandro, CA 94577
Telephone: (510) 351-6101

West Sacramento Branch

Cummins West, Inc.
2661 Evergreen Avenue
West Sacramento, CA 95691
Telephone: (916) 371-0630

Colorado

Denver Distributor

Cummins Power, Inc.
5100 East 58th Avenue
Commerce City, CO 80022
Telephone: (303) 287-0201

Denver Generator Branch

Gen Power, Inc.
5720 Holly Street
Unit A
Commerce City, CO 80022
Telephone: (303) 286-7697

Grand Junction Branch

Cummins Power, Inc.
2380 U.S. Highway 6 & 50
P.O. Box 339
Grand Junction, CO 81501
Telephone: (303) 242-5776

Greeley Branch

Cummins Power, Inc.
250 Sixth Avenue
Greeley, CO 80631
Telephone: (303) 351-0448

Connecticut

Hartford Distributor

Cummins - Connecticut, Inc.
260 Murphy Road
Hartford, CT 06114
Telephone: (203) 527-9156
Parts: (203) 525-5606

Florida

Tampa Distributor

Cummins Southeastern Power, Inc.
Corporate Office
5421 N. 59th Street
Tampa, FL 33610
Telephone: (813) 621-7202

Ft. Myers Branch

Cummins Southeastern Power, Inc.
2671 Edison Avenue, Unit #3
Ft. Myers, FL 33916
Telephone: (813) 337-1211

Jacksonville Branch

Cummins Southeastern Power, Inc.
2060 West 21st Street
P.O. Box 12036
Jacksonville, FL 32209
Telephone: (904) 355-3437

Miami Branch

Cummins Southeastern Power, Inc.
9900 N.W. 77th Court
Hialeah Gardens, FL 33016
Telephone: (305) 821-4200

Orlando Branch

Cummins Southeastern Power, Inc.
4020 North
Orange Blossom Trail
Orlando, FL 32810
Telephone: (407) 298-2080

Tampa Branch

Cummins Southeastern Power, Inc.
5910 E. Hillsborough Avenue
P. O. Box 11737
Tampa, FL 33680
Telephone: (813) 626-1101

Georgia

Atlanta Distributor

Cummins South, Inc.
5125 Georgia Highway 85
College Park, GA 30349
Telephone: (404) 763-0151

Albany Branch

Cummins South, Inc.
1915 W. Oakridge Drive
Albany, GA 31707-4938
Telephone: (912) 888-6210

Atlanta Branch

Cummins South, Inc.
100 University Avenue, S.W.
Atlanta, GA 30315-2202
Telephone: (404) 527-7800

Augusta Branch

Cummins South, Inc.
1255 New Savannah Road
Augusta, GA 30901-3891
Telephone: (706) 722-8825

Dalton Branch

Cummins South, Inc.
204 Carbondale Road
Dalton, GA 30720-5303
Telephone: (706) 277-1144

Savannah Branch

Cummins South, Inc.
8 Interchange Court
Savannah, GA 31401-1627
Telephone: (912) 232-5565

Hawaii

Honolulu Distributor

Cummins Hawaii Diesel Power, Inc.
215 Puuhale Road
Honolulu, HI 96819-2235
Telephone: (808) 845-6606

Idaho

Boise - (Branch of Salt Lake City)

Cummins Intermountain, Inc.
2851 Federal Way
P.O. Box 5212
Boise, ID 83705
Telephone: (208) 336-5000

Pocatello - (Branch of Salt Lake City)

Cummins Intermountain, Inc.
14299 Highway 30 West
Pocatello, ID 83201
Telephone: (208) 234-1661

Illinois

Chicago Distributor

Cummins Northern Illinois, Inc.
7145 Santa Fe Drive
Hodgkins, IL 60525
Telephone: (708) 579-9222

Bloomington-Normal - (Branch of Indianapolis)

Cummins Mid-States Power, Inc.
P.O. Box 348
(at U.S. 51 N and I-55)
Bloomington-Normal, IL 61761
Telephone: (309) 452-4454

Harrisburg (Branch of St. Louis)

Cummins Gateway, Inc.
Rt. 4, Box 629
Harrisburg, IL 62946
Telephone: (618) 273-4138

Rock Island - (Branch of Omaha)

Cummins Great Plains Diesel, Inc.
7820-42nd Street West
Rock Island, IL 61204
Telephone: (309) 787-4300

Rockford Branch

Cummins Northern Illinois, Inc.
4617 Sandy Hollow Road
Rockford, IL 61109
Telephone: (815) 874-1700

Indiana

Indianapolis Distributor

Cummins Mid-States Power, Inc.
P.O. Box 42917
2421 Production Drive
Indianapolis, IN 46242-917
Telephone: (317) 243-7979

Evansville - (Branch of Louisville)

Cummins Cumberland, Inc.
7901 Highway 41 N.
Evansville, IN 47711
Telephone: (812) 867-4400

Ft. Wayne Branch

Cummins Mid-States Power, Inc.
3415 Coliseum Blvd. West
(At Jct. I-69 & 30/33)
Ft. Wayne, IN 46808
Telephone: (219) 482-3691

Gary - (Branch of Chicago)

Cummins Northern Illinois, Inc.
1440 Texas Street
Gary, IN 46402
Telephone: (219) 885-5591

Indianapolis Branch

Cummins Mid-States Power, Inc.
P. O. Box 42917
3621 West Morris Street
Indianapolis, IN 46242-917
Telephone: (317) 244-7251

Linton Branch

Cummins Mid-States Power, Inc.
1244 N.E. A Street
(Indiana Highway 54 East)
Linton, IN 47441-0678
Telephone: (812) 847-2201 and
(812) 847-2202

Zionsville Branch

Cummins-Onan Power, Inc.
5005 West 106th Street
P.O. Box 668
Zionsville, IN 46077
Telephone: (317) 873-5005

Iowa

Cedar Rapids - (Branch of Omaha)

Cummins Great Plains Diesel, Inc.
625 - 33rd Avenue SW
P.O. Box 1107
Cedar Rapids, IA 52406
Telephone: (319) 366-7537 (24 hours)

Des Moines - (Branch of Omaha)

Cummins Great Plains Diesel, Inc.
1680 N.E. 51st Avenue
P.O. Box B
Des Moines, IA 50313
Telephone: (515) 262-9591
Parts: (515) 262-9744
(515) 262-9591 after midnight

Des Moines - (Branch of Omaha)

Midwestern Power Products
Division of Cummins Great Plains
Diesel, Inc.
10100 Dennis Drive
Des Moines, IA 50322
Telephone: (515) 278-5521

Kansas

Colby - (Branch of Kansas City, Missouri)

Cummins Mid-America, Inc.
1880 South Range
Colby, KS 67701
Telephone: (913) 462-3945
(913) 462-3143

Garden City - (Branch of Kansas City, Missouri)

Cummins Mid-America, Inc.
2008 West Mary
Garden City, KS 67846
Telephone: (316) 275-2277

Wichita - (Branch of Kansas City, Missouri)

Cummins Mid-America, Inc.
5101 North Broadway
Wichita, KS 67219
Telephone: (316) 838-0875

Kentucky

Louisville Distributor

Cummins Cumberland, Inc.
(Corporate Office)
304 Whittington Parkway
Suite 200
Louisville, KY 40222
Telephone: (502) 426-9300

Hazard Branch

Cummins Cumberland, Inc.
Highway 15 South
P.O. Box 510
Hazard, KY 41701
Telephone: (606) 436-5718

Louisville Branch

Cummins Cumberland, Inc.
9820 Bluegrass Parkway
Louisville, KY 40299
Telephone: (502) 491-4263

Louisiana

Morgan City - (Branch of Memphis)

Cummins Mid-South, Inc.
Hwy. 90 East
P.O. Box 1229
Amelia, LA 70340
Telephone: (504) 631-0576

New Orleans - (Branch of Memphis)

Cummins Mid-South, Inc.
110 E. Airline Highway
Kenner, LA 70062
Telephone: (504) 468-3535

Maine

Bangor (Branch of Boston)

Cummins Northeast, Inc.
142 Target Industrial Circle
Bangor, ME 04401
Telephone: (207) 941-1061

Scarborough - (Branch of Boston)

Cummins Northeast, Inc.
10 Gibson Road
Scarborough, ME 04074
Telephone: (207) 883-8155

Maryland

Baltimore Distributor

Cummins Chesapeake, Inc.
6120 Holabird Avenue
Baltimore, MD 21224
Telephone: (410) 633-5161

Baltimore Branch

Cummins Chesapeake
3140 Washington Boulevard
Baltimore, MD 21230-1090
Telephone: (410) 644-6500

Massachusetts

Boston Distributor

Cummins Northeast, Inc.
100 Allied Drive
Dedham, MA 02026
Telephone: (617) 329-1750

West Springfield Branch

Cummins Northeast, Inc.
124 Ashley Avenue
West Springfield, MA 01089
Telephone: (413) 737-2659

Michigan

Detroit Distributor

Cummins Michigan, Inc.
41216 Vincenti Court
Novi, MI 48375
Telephone: (810) 478-9700

Blissfield, Michigan

Diesel Fuel Systems, Inc.
211 N. Jipson Street
Blissfield, MI 49228
Telephone: (517) 486-4324

Dearborn Branch

Cummins Michigan, Inc.
3760 Wyoming Avenue
Dearborn, MI 48120
Telephone: (810) 843-6200

Grand Rapids Branch

Cummins Michigan, Inc.
3715 Clay Avenue, S.W.
Grand Rapids, MI 49508
Telephone: (616) 538-2250

Grand Rapids Branch

Standby Power, Inc.
7580 Expressway Drive S.W.
Grand Rapids, MI 49548
Telephone: (616) 281-2211

Iron Mountain - (Branch of De Pere)

Cummins Great Lakes, Inc.
P.O. Box 703
1901 Stevenson Avenue
Iron Mountain, MI 49801
Telephone: (906) 774-2424
(800) 236-2424

Novi Branch

Cummins Michigan, Inc.
21500 Novi Road
Novi, MI 48375
Telephone: (810) 380-4300

Saginaw Branch

Cummins Michigan, Inc.
722 N. Outer Drive
Saginaw, MI 48605
Telephone: (517) 752-5200

Standby Power - (Branch of Detroit)

Standby Power, Inc.
12130 Dixie
Redford, MI 48239
Telephone: (810) 538-0200

Minnesota

St. Paul Distributor

Cummins Diesel Sales, Inc.
2690 Cleveland Avenue North
St. Paul, MN 55113

(Mailing Address)
P.O. Box 64578
St. Paul, MN 55164
Telephone: (612) 636-1000

Duluth Branch

Cummins Diesel Sales, Inc.
3115 Truck Center Drive
Duluth, MN 55806-1786
Telephone: (218) 628-3641

Hibbing Branch

Cummins Diesel Sales, Inc.
604 West 41st Street
P.O. Box 159
Hibbing, MN 55746
Telephone: (218) 263-7558

Mississippi

Jackson - (Branch of Memphis)

Cummins Mid-South, Inc.
325 New Highway 49 South
P.O. Box 54224
Jackson, MS 39288-4224
Telephone: Admin.: (601) 932-7016
Parts: (601) 932-2720
Service: (601) 939-1800

Missouri

Kansas City Distributor

Cummins Mid-America, Inc.
1760 Universal
P.O. Box 4985
Kansas City, MO 64120
General Accounting Office
Telephone: (816) 483-5070

Kansas City Branch

Cummins Mid-America, Inc.
3527 Gardner Avenue
Kansas City, MO 64120
Telephone: (816) 483-6313

Kansas City Fuel Systems Branch

KC Diesel & Electric
2810 Nicholson
Kansas City, MO 64120
Telephone: (816) 241-3400

Joplin Branch

Cummins Mid-America, Inc.
3507 East 20th Street
Joplin, MO 64801
Telephone: (417) 623-1661

Springfield Branch

Cummins Mid-America, Inc.
3637 East Kearney
Springfield, MO 65803
Telephone: (417) 862-0777

St. Louis Distributor

Cummins Gateway, Inc.
7210 Hall Street
St. Louis, MO 63147
Telephone: (314) 389-5400

Columbia Branch

Cummins Gateway, Inc.
5221 Highway 763 North
Columbia, MO 65202-1028
Telephone: (314) 449-3711

Sikeston Branch

Cummins Gateway, Inc.
101 Keystone Drive
Sikeston, MO 63801
Telephone: (314) 472-0303

Montana

Billings - (Branch of Denver)

Cummins Power, Inc.
5151 Midland Road
P.O. Box 30377
Billings, MT 59101
Telephone: (406) 245-4194

Great Falls - (Branch of Denver)

Cummins Power, Inc.
415 Vaughn Road (59404)
P.O. Box 1199
Great Falls, MT 59403
Telephone: (406) 452-8561

Missoula - (Branch of Seattle)

Cummins Northwest, Inc.
4950 North Reserve Street
Missoula, MT 59802-1498
Telephone: (406) 728-1300

Nebraska

Omaha Distributor and Branch

Cummins Great Plains Diesel, Inc.
5515 Center Street
P.O. Box 6068
Omaha, NE 68106
Telephone: (402) 551-7678 (24 hours) or
(402) 493-4656

Kearney Branch

Cummins Great Plains Diesel, Inc.
515 Central Avenue
P.O. Box 1326
Kearney, NE 68847
Telephone: (308) 234-1994

Nevada

Elko - (Branch of Salt Lake City)

Cummins Intermountain, Inc.
5370 East Idaho Street
Elko, NV 89801
Telephone: (702) 738-6405

Las Vegas - (Branch of Salt Lake City)

Cummins Intermountain, Inc.
2750 Losee Road
North Las Vegas, NV 89036
Telephone: (702) 399-2339

(Mailing Address:)
P. O. Box 3997
North Las Vegas, NV 89036-3998

Sparks - (Branch of Salt Lake City)

Cummins Intermountain, Inc.
150 Glendale Avenue
Sparks, NV 89431
Telephone: (702) 331-4983

New Jersey

Newark - (Branch of Bronx)

Cummins Metropower, Inc.
Routes U.S. 1 & 22
Newark, NJ 07114
Telephone: (201) 242-2255

New Mexico

Albuquerque - (Branch of Phoenix)

Cummins Southwest, Inc.
1921 Broadway N.E.
Albuquerque, NM 87102
Telephone: (505) 247-2441

Farmington - (Branch of Phoenix)

Cummins Southwest, Inc.
1101 North Troy King Road
Farmington, NM 87401
Telephone: (505) 327-7331

New York

Bronx Distributor

Cummins Metropower, Inc.
890 Zerega Avenue
Bronx, NY 10473
Telephone: (718) 892-2400

Albany - (Branch of Boston)

Cummins Northeast, Inc.
101 Railroad Avenue
Albany, NY 12205
Telephone: (518) 459-1710

Buffalo - (Branch of Boston)

Cummins Northeast, Inc.
480 Lawrence Bell Dr.
Williamsville, NY 14221-7090
Telephone: (716) 631-3211

Syracuse - (Branch of Boston)

Cummins Northeast, Inc.
29 Eastern Avenue
Syracuse, NY 13211
Telephone: (315) 437-2751

North Carolina

Charlotte Distributor

Cummins Atlantic, Inc.
11101 Nations Ford Road
P.O. Box 240729
Charlotte, NC 28224-0729
Telephone: (704) 588-1240

Charlotte Branch

Cummins Atlantic, Inc.
3700 North Interstate 85
Charlotte, NC 28206
Telephone: (704) 596-7690

Greensboro Branch

Cummins Atlantic, Inc.
513 Preddy Boulevard
P.O. Box 22066
Greensboro, NC 27420-2066
Telephone: (919) 275-4531

Wilson Branch

Cummins Atlantic, Inc.
1514 Cargill Avenue
P.O. Box 1177
Wilson, NC 27894-1117
Telephone: (919) 237-9111

North Dakota

Fargo - (Branch of St. Paul)

Cummins Diesel Sales, Inc.
4050 West Main Avenue (58103)
P.O. Box 2111
Fargo, ND 58107
Telephone: (701) 282-2466

Grand Forks - (Branch of St. Paul)

Cummins Diesel Sales, Inc.
4728 Gateway Drive
P.O. Box 636
Grand Forks, ND 58201
Telephone: (701) 775-8197
(701) 772-7689 after 12:30 a.m.

Minot - (Branch of St. Paul)

Cummins Diesel Sales, Inc.
1501 - 20th Avenue, S.W.
P.O. Box 1179
Minot, ND 58702
Telephone: (701) 852-3585
(701) 839-3417 after 12:30 a.m.

Ohio

Columbus Distributor and Branch

Cummins Ohio, Inc.
4000 Lyman Drive
Hilliard (Columbus), OH 43026
Telephone: (614) 771-1000

Akron Branch

Cummins Ohio, Inc.
1033 Kelly Avenue
Akron, OH 44306
Telephone: (216) 773-7821

Cincinnati Branch

Cummins Ohio, Inc.
10470 Evendale Drive
Cincinnati, OH 45241
Telephone: (513) 563-6670

Cincinnati Branch

Cummins Ohio, Inc.
Power Systems Division
10660 Evendale Drive
Cincinnati, OH 45241
Telephone: (513) 563-9303

Cleveland Branch

Cummins Ohio, Inc.
7585 Northfield Road
Cleveland, OH 44146
Telephone: (216) 439-6800

Lima Branch

Cummins Ohio, Inc.
960 Broadway
Lima, OH 45804
Telephone: (419) 227-2641

Strasburg Branch

Cummins Ohio, Inc.
777 South Wooster Avenue
Box 136
Strasburg, OH 44680
Telephone: (216) 878-5511
After hours: (216) 364-1433

Toledo Branch

Cummins Ohio, Inc.
801 Illinois Avenue
Maumee
(Toledo), OH 43537
Telephone: (419) 893-8711

Youngstown Branch

Cummins Ohio, Inc.
7145 Masury Road
Hubbard
(Youngstown), OH 44425
Telephone: (216) 534-1935

Oklahoma

Duncan - (Branch of Arlington)

Cummins Southern Plains, Inc.
1400 East Bois D'Arc
P.O. Box 310
Duncan, OK 73534-0310
Telephone: (405) 255-1414 (24 hours)

Oklahoma City - (Branch of Arlington)

Cummins Southern Plains, Inc.
5800 West Reno
P.O. Box 1636
Oklahoma City, OK 73101-1636
Telephone: (405) 946-4481 (24 hours)

Tulsa - (Branch of Arlington)

Cummins Southern Plains, Inc.
9725 E. Admiral Place
P.O. Box 471616
Tulsa, OK 74116-2527
Telephone: (918) 838-2555 (24 hours)

Oregon

Bend - (Branch of Seattle)

Cummins Northwest, Inc.
3500 N. Highway 97 (97701-5729)
P.O. Box 309
Bend, OR 97709-0309
Telephone: (503) 389-1900

Coburg/Eugene - (Branch of Seattle)

Cummins Northwest, Inc.
91201 Industrial Parkway
Coburg, OR 97401

(Mailing Address)
P.O. Box 10877
Eugene, OR 97440-2887
Telephone: (503) 687-0000

Medford - (Branch of Seattle)

Cummins Northwest, Inc.
4045 Crater Lake Highway
Medford, OR 97504-9796
Telephone: (503) 779-0151

Pendleton - (Branch of Seattle)

Cummins Northwest, Inc.
223 S.W. 23rd Street
Pendleton, OR 97801-1810
Telephone: (503) 276-2561

Portland - (Corporate Branch of Seattle)

Cummins Northwest, Inc.
4711 N. Basin Avenue
P. O. Box 2710 (97208-2710)
Portland, OR 97217-3557
Telephone: (503) 289-0900

Portland - (Branch of Seattle)

Cummins Northwest, Inc.
4711 N. Basin Avenue
P. O. Box 2710 (97208-2710)
Portland, OR 97217-3557
Telephone: (503) 289-0900

Pennsylvania

Philadelphia Distributor

Cummins Diesel Engines, Inc.
2727 Ford Road
Bristol, PA 19007-6895
Telephone: (215) 785-6005

Bristol Onan Branch

Keystone Onan Power, Inc.
2727 Ford Road
Bristol, PA 19007-6895
Telephone: (215) 785-6005

Clearfield Branch

Cummins Diesel Engines, Inc.
Clearfield Parts Center
501 Williams Street
Clearfield, PA 16830
Telephone: (814) 765-2421

Harrisburg Branch

Cummins Diesel Engines, Inc.
4499 Lewis Road
Harrisburg, PA 17111
Telephone: (717) 564-1344

Harrisburg Onan Branch

Keystone Onan Power, Inc.
1549 Bobali Drive
Harrisburg, PA 17104-3208
Telephone: (717) 986-9126

Monroeville Branch

Cummins Diesel Engines, Inc.
2740 Mosside Boulevard
Monroeville, PA 15146
Telephone: (412) 856-6700

Puerto Rico

Catano

Cummins Diesel Power, Inc.
Calle C #31 El Matadero
Puerto Nuevo, Puerto Rico 00920
Telephone: (809) 793-0300

South Carolina

Charleston - (Branch of Charlotte)

Cummins Atlantic, Inc.
3028 West Montague Avenue
Charleston, SC 29418-5593
Telephone: (803) 554-5112

Charleston - (Onan Branch of Charlotte)

Cummins Atlantic, Inc.
Atlantic Power Generation
3028 West Montague Avenue
Charleston, SC 29418
Telephone: (803) 554-9804

Columbia - (Branch of Charlotte)

Cummins Atlantic, Inc.
1233 Bluff Road
P.O. Box 13543
Columbia, SC 29201-3543
Telephone: (803) 799-2410

South Dakota

Sioux Falls - (Branch of Omaha)

Cummins Great Plains Diesel, Inc.
701 East 54th Street North
Sioux Falls, SD 57104
Telephone: (605) 336-1715
(605) 334-6492

Tennessee

Memphis Distributor & Distribution Center

Cummins Mid-South, Inc.
666 Riverside Drive
P.O. Box 3080
Memphis, TN 38103
Telephone: (901) 577-0666

Chattanooga - (Branch of Atlanta)

Cummins South, Inc.
1509 East 26th Street
Chattanooga, TN 37407-1095
Telephone: (615) 629-1447

Knoxville - (Branch of Louisville)

Cummins Cumberland, Inc.
1211 Ault Road
Knoxville, TN 37914
Telephone: (615) 523-0446

Memphis Branch

Cummins Mid-South, Inc.
1784 E. Brooks Road
Memphis, TN 38116
Telephone:
Sales/Admin.: (901) 345-7424
Parts: (901) 345-1784
Service: (901) 345-6185

Nashville - (Branch of Louisville)

Cummins Cumberland, Inc.
706 Spence Lane
Nashville, TN 37217
Telephone: (615) 366-4341

Texas

Arlington Distributor

Cummins Southern Plains, Inc.
600 N. Watson Road
P.O. Box 90027
Arlington, TX 76004-3027
Telephone: (817) 640-6801 (24 hours)

Amarillo Branch

Cummins Southern Plains, Inc.
5224 Interstate 40 -
Expressway East
P.O. Box 31570
Amarillo, TX 79120-1570
Telephone: (806) 373-3793 (24 hours)

Corpus Christi Branch

Cummins Southern Plains, Inc.
1302 Corn Products Road
P.O. Box 48
Corpus Christi, TX 78403-0048
Telephone: (512) 289-0700 (24 hours)

Dallas Branch

Cummins Southern Plains, Inc.
3707 Irving Boulevard
Dallas, TX 75247
Telephone: (214) 631-6400 (24 hours)

El Paso - (Branch of Phoenix)

Cummins Southwest, Inc.
14333 Gateway West
El Paso, TX 79927
Telephone: (915) 852-4200

Fort Worth Branch

Cummins Southern Plains, Inc.
3250 North Freeway
Fort Worth, TX 76111
Telephone: (817) 624-2107 (24 hours)

Houston Branch

Cummins Southern Plains, Inc.
4750 Homestead Road
P.O. Box 1367
Houston, TX 77251-1367
Telephone: (713) 675-7421 (24 hours)

Mesquite Branch

Cummins Southern Plains, Inc.
2615 Big Town Blvd.
Mesquite, TX 75150
Telephone: (214) 321-5555 (24 hours)

Odessa Branch

Cummins Southern Plains, Inc.
1210 South Grandview
P.O. Box 633
Odessa, TX 79760-0633
Telephone: (915) 332-9121 (24 hours)

San Antonio Branch

Cummins Southern Plains, Inc.
6226 Pan Am Expressway North
P.O. Box 18385
San Antonio, TX 78218-0385
Telephone: (512) 655-5420 (24 hours)

Utah

Salt Lake City Distributor

Cummins Intermountain, Inc.
1030 South 300 West
P.O. Box 25428
Salt Lake City, UT 84125
Telephone: (801) 355-6500

Vernal Branch

Cummins Intermountain, Inc.
1435 East 335 South
P.O. Box 903
Vernal, UT 84078
Telephone: (801) 789-5732

Virginia

Bristol - (Branch of Louisville)

Cummins Cumberland, Inc.
400 Stage Coach Road
1-81 at Old Airport Road
Bristol, VA 24201
Telephone: (703) 669-4200

Norfolk - (Branch of Charlotte)

Cummins Atlantic, Inc.
Atlantic Power Generation
1114 Ballentine Blvd.
Norfolk, VA 23504
Telephone: (804) 627-9470

Richmond - (Branch of Charlotte)

Cummins Atlantic, Inc.
3900 Deepwater Terminal Road
Richmond, VA 23234
Telephone: (804) 232-7891

Roanoke - (Branch of Charlotte)

Cummins Atlantic, Inc.
5307 Peters Creek Road
P.O. Box 7237
Roanoke, VA 24019-7237
Telephone: (703) 362-1673

Washington

Seattle Distributor

Cummins Northwest, Inc.
811 S.W. Grady Way (98055-2944)
P.O. Box 9811
Renton, WA 98057-9811
Telephone: (206) 235-3400

Chehalis Branch

Cummins Northwest, Inc.
1200 N.W. Maryland
Chehalis, WA 98532-1813
Telephone: (206) 748-8841

Spokane Branch

Cummins Northwest, Inc.
E. 3904 Trent Avenue (99202-4471)
P.O. Box 2746 -
Terminal Annex
Spokane, WA 99220-2746
Telephone: (509) 534-0411

Tacoma Branch

Cummins Northwest, Inc.
3701 Pacific Highway East
Tacoma, WA 98424-1135
Telephone: (206) 922-2191

Yakima Branch

Cummins Northwest, Inc.
1905 East Central Avenue (98901-3609)
P.O. Box 9129
Yakima, WA 98909-0129
Telephone: (509) 248-9033

West Virginia

Charleston - (Branch of Louisville)

Cummins Cumberland, Inc.
Charleston Ordnance Center
P.O. Box 8456
South Charleston, WV 25303
Telephone: (304) 744-6373

Fairmont - (Branch of Louisville)

Cummins Cumberland, Inc.
South Fairmont Exit, I-79
145 Middletown Road
Fairmont, WV 26554
Telephone: (304) 367-0196

Wisconsin

DePere Distributor

Cummins Great Lakes, Inc.
875 Lawrence Drive

(Mailing Address)
P.O. Box 530
DePere (Green Bay), WI 54115
Telephone: (414) 337-1991

Chippewa Falls Branch

Cummins Great Lakes, Inc.
Route #7
Box Number 88
Chippewa Falls (Eau Claire), WI 54729
Telephone: (715) 832-4329

DePere Branch

Cummins Great Lakes, Inc.
939 Lawrence Drive

(Mailing Address)
P. O. Box 530
DePere (Green Bay), WI 54115
Telephone: (414) 336-9631

Milwaukee Branch

Cummins Great Lakes, Inc.
9401 South 13th Street
P.O. Box D
Oak Creek, WI 53154
Telephone: (414) 768-7400
(800) 472-8283

Wausau Branch

Cummins Great Lakes, Inc.
4703 Rib Mountain Drive
Wausau, WI 54401
Telephone: (715) 359-6888
(800) 236-3744

Wyoming

Gillette - (Branch of Denver)

Cummins Power, Inc.
2700 Hwy. 14 & 16 North
P.O. Box 1207 (82717)
Gillette, WY 82716
Telephone: (307) 682-9611

Rock Springs - (Branch of Salt Lake City)

Cummins Intermountain, Inc.
2000 Foothill Blvd.
P.O. Box 1634
Rock Springs, WY 82901
Telephone: (307) 362-5168

Distributors and Branches - Canada

Alberta

Edmonton Distributor

Cummins Alberta
14755 - 121A Avenue
Edmonton, Alberta T5L 2T2, Canada
Telephone: (403) 455-2151

Calgary Branch

Cummins Alberta
4887 - 35th Street S.E.
Calgary, Alberta T2B 3H6, Canada
Telephone: (403) 569-1122

Hinton Branch

Cummins Alberta
135 Veats Avenue
Hinton, Alberta T7V 1S8, Canada
Telephone: (403) 865-5111

Lethbridge Branch

Cummins Alberta
240 - 24th Street North
Lethbridge, Alberta T1J 3T8, Canada
Telephone: (403) 329-6144

British Columbia

Vancouver Distributor

Cummins British Columbia
18452-96 Avenue
Surrey, B.C.
V4N 3P8
Telephone: (604) 882-5000

Kamloops Branch

Cummins British Columbia
976 Laval Crescent
Kamloops, B.C. Canada V2C 5P5
Telephone: (604) 828-2388

Prince George Branch

Cummins British Columbia
1378 - 5th Avenue
Prince George, B.C. V2L 3L4
Telephone: (604) 564-9111

Sparwood Branch

Cummins British Columbia
731 Douglas Fir Road
Sparwood, B.C. VOB 2GO, Canada
Telephone: (604) 425-0522

Tumbler Ridge Branch

Cummins British Columbia
Industrial Site, Box 226
Tumbler Ridge, B.C.
Canada VOC 2WO
Telephone: (604) 242-4217

Manitoba

Winnipeg Distributor

Cummins Mid-Canada Ltd.
489 Oak Point Road
P.O. Box 1860
Winnipeg, MB R3C 3R1, Canada
Telephone: (204) 632-5470

New Brunswick

Fredericton - (Branch of Montreal)

Diesel Cummins

Branch of Cummins Americas, Inc.
R.R. #1, Doak Road
Fredericton,
New Brunswick E3B 4X2, Canada
Telephone: (506) 451-1929

Newfoundland

St. John's - (Branch of Montreal)

Cummins Diesel

Branch of Cummins Americas, Inc.
122 Clyde Avenue
Donovans Industrial Park
Mount Pearl, Newfoundland A1N 4S3
Canada
Telephone: (709) 747-0176

Wabush - (Branch of Montreal)

Cummins Diesel
Branch of Cummins Americas, Inc.
Wabush Industrial Park
Wabush, Newfoundland A0R 1B0
Telephone: (709) 282-3626

Nova Scotia

Halifax - (Branch of Montreal)

Cummins Diesel

Branch of Cummins Americas, Inc.
50 Simmonds Drive
Dartmouth, Nova Scotia B3B 1R3
Telephone: (902) 468-7938

Ontario

Toronto Distributor

Cummins Ontario Inc.
Corporate Office & Parts Distribution
Centre
301 Wyecroft Road
Oakville, Ontario L6K 2H2, Canada
Telephone: (416) 844-5851

Toronto Branch

Cummins Ontario Inc.
150 N. Queen Street
Etobicoke, Ontario M9C 1A8
P.O. Box 40, Station "U"
Toronto, Ontario M8Z 5N1
Telephone: (416) 621-9921

Ottawa Branch

Cummins Ontario Inc.
3189 Swansea Crescent
Ottawa, Ontario K1G 3W5, Canada
Telephone: (613) 736-1146

Thunder Bay Branch

Cummins Ontario Inc.
1400 W. Walsh Street
Thunder Bay
Ontario P7E 4X4
Telephone: (807) 577-7561

Whitby Branch

Cummins Ontario Inc.
1311 Hopkins Street
Whitby, Ontario L1N 2C2, Canada
Telephone: (416) 668-6886

Quebec

Montreal Distributor

Cummins Diesel
Branch of Cummins Americas, Inc.
7200 Trans Canada Highway
Pointe Claire, Quebec H9R 1C2, Canada
Telephone: (514) 695-8410

Montreal Branch

Cummins Diesel
Branch of Cummins Americas, Inc.
7200 Trans Canada Highway
Pointe Claire, Quebec H9R 1C2, Canada
Telephone: (514) 695-8410
Sales: (514) 694-5143
Parts: (514) 694-5880

Quebec City Branch

Cummins Diesel
Branch of Cummins Americas, Inc.
2400 Watt Street
Ste. Foy, Quebec G1P 3T3, Canada
Telephone: (418) 651-2911

Saskatchewan

Lloydminster - (Branch of Winnipeg)

Cummins Mid-Canada Ltd.
3709 - 44th Street
P.O. Box 959
Lloydminster, SK S9V OY9, Canada
Telephone: (306) 825-2062

Regina - (Branch of Winnipeg)

Cummins Mid-Canada Ltd.
110 Kress Street
P.O. Box 98
Regina, SK S4P 2Z5, Canada
Telephone: (306) 721-9710

Saskatoon - (Branch of Winnipeg)

Cummins Mid-Canada, Ltd.
3001 Faithful Avenue
P.O. Box 7679
Saskatoon, SK S7K 4R4, Canada
Telephone: (306) 933-4022

Distributors and Branches - Australia

Sydney (Lansvale)

Cummins Diesel Sales & Service
P.O. Box 150
Cambramatta, 2166
New South Wales, Australia

Location:
164-170 Hume Highway
Lansvale, 2166, Australia

Telephone: (61-2) 728-6211

Branches:

Adelaide

Cummins Diesel Sales & Service
P.O. Box 108
Blair Athol, 5084
South Australia, Australia

Location:
45-49 Cavan Road
Gepps Cross, 5094

Telephone: (61-8) 262-5211

Brisbane

Cummins Diesel Sales & Service
P.O. Box 124
Darra, 4076
Queensland, Australia

Location:
33 Kimberley Street
Darra, 4076, Australia

Telephone: (61-7) 375-3277

Cairns

Cummins Diesel Sales & Service
P.O. Box 7189
Cairns Mail Centre, 4870
Queensland, Australia

Location:
Cnr. Toohey & Knight Streets
Portsmith, Cairns, 4870

Telephone: (61-70) 35-1400

Campbellfield

Cummins Diesel Sales & Service
Private Bag 9
Campbellfield, 3061
Victoria, Australia

Location:
1788-1800 Hume Highway
Campbellfield, 3061

Telephone: (613) 357-9200

Dandenong

Cummins Diesel Sales & Service
Lot 7 Greens Road
Dandenong, 3175
Victoria, Australia
Telephone: (613) 706-8088

Darwin

Cummins Diesel Sales & Service
P.O. Box 37587
Winnellie, 0821
Northern Territory, Australia

Location:
Lot 1758 Graffin Crescent
Winnellie, 0821

Telephone: (61-89) 47-0766

Devonport

Cummins Diesel Sales & Service
P.O. Box 72E
Tasmania, Australia

Location:
2 Matthews Way
Devonport, 7310

Telephone: (61-04) 24-8800

Emerald

Cummins Diesel Sales & Service
P.O. Box 668
Emerald, 4720
Queensland, Australia

Location:
Capricorn Highway
Emerald, 4720

Telephone: (61-79) 82-4022

Grafton

Cummins Diesel Sales & Service
P.O. Box 18
South Grafton, 2461
New South Wales, Australia

Location:
18-20 Induna Street
South Grafton, 2461

Telephone: (61-66) 42-3655

Hexham

Cummins Diesel Sales & Service
21 Galleghan Street
Hexham, 2322
New South Wales, Australia
Telephone: (61-49) 64-8466

Kalgoorlie

Cummins Diesel Sales & Service
P.O. Box 706
Kalgoorlie, 6430
Western Australia, Australia

Location:
16 Atbara Street
Kalgoorlie, 6430

Telephone: (61-90) 21-2588 or 21-2994

Mackay

Cummins Diesel Sales & Service
P.O. Box 842
Mackay, 4740
Queensland, Australia

Location:
4 Presto Avenue
Mackay, 4746

Telephone: (61-79) 55-1222

Mount Gambier

Cummins Diesel Sales & Service
P.O. Box 2219
Mount Gambier, 5290
South Australia, Australia

Location:
2 Avey Road
Mount Gambier, 5290

Telephone: (61-87) 25-6422

Penrith

Cummins Diesel Sales & Service
P.O. Box 132
Cambridge Park, 2747
New South Wales, Australia

Location:
7 Andrews Road
Penrith, 2750

Telephone: (61-47) 29-1313

Queanbeyan

Cummins Diesel Sales & Service
P.O. Box 527
Queanbeyan, 2620
New South Wales, Australia

Location:
15-27 Bayldon Road
Queanbeyan, 2620

Telephone: (61-62) 97-3433

Swan Hill

Cummins Diesel Sales & Service
P.O. Box 1264
Swan Hill, 3585
Victoria, Australia

Location:
5 McAllister Road
Swan Hill, 3585

Telephone: (61-50) 32-1511

Tamworth

Cummins Diesel Sales & Service
P.O. Box 677
Tamworth, 2320
New South Wales, Australia

Location:
Lot 65 Gunnedah Road
Tamworth, 2340

Telephone: (61-67) 65-5455

Welshpool

Cummins Diesel Sales & Service
P. O. Box 52
Welshpool, 6986
Western Australia, Australia

Location:
50 Kewdale Road
Welshpool, 6106

Telephone: (61-9) 458-5911

Wodonga

Cummins Diesel Sales & Service
P.O. Box 174
Wodonga, 3690
Victoria, Australia

Location:
9-11 McKoy Street
Wodonga, 3690

Telephone: (61-60) 24-3655

Distributors and Branches - New Zealand

Auckland

Cummins Diesel Sales & Service (NZ) Ltd.
Private Bag 92804
Penrose, Auckland, New Zealand

Location:
440 Church Street
Penrose

Telephone: (64-9) 579-0085

Branches:

Auckland

Cummins Diesel Engines
Private Bag 92804
Penrose, Auckland, New Zealand

Location:
440 Church Street
Penrose

Telephone: (64-9) 579-0085

Christchurch

Cummins Diesel Engines
P.O. Box 16-149
Hornby, Christchurch, New Zealand

Location:
35 Parkhouse Road
Sockburn, Christchurch

Telephone: (64-3) 348-8170

Mt. Maunganui

Cummins Diesel Engines
P.O. Box 4005
Mt. Maunganui, New Zealand

Location:
101 Totara Street
Mt. Maunganui

Telephone: (64-7) 575-0545

Palmerston North

Cummins Diesel Engines
P.O. Box 9024
Palmerston North, New Zealand

Location:
852-860 Tremaine Avenue

Telephone: (64-6) 356-2209

Regional Offices - International

North Africa Regional Office - Algiers

Cummins Corporation
Bureau de Liaison
38, Lotissement Benachour Abdelkader
Cheraga
42300 Wilaya de Tipasa
Algeria
Telephone: (213) 2374326
Country
Covered: Algeria

European Regional Office - Mechelen

Cummins Diesel N.V.
Blarenberglaan 4
Industriepark Noord 2
2800 Mechelen
Brussels
Telephone: (32-15) 20003
Countries Covered:
Austria
Belgium
Czech Republic
Denmark
Finland
Greece
Hungary
Iceland
Israel
Luxembourg
Netherlands
Norway
Portugal
Slovakia
Spain
Sweden
Switzerland

Cumbrasa Regional Office - Brazil

Cummins Brasil S.A.
Rua Jati, 266
07180-900 Guarulhos
Sao Paulo, Brazil

Mailing Address:
P.O. Box 13
07180-900 Guarulhos
Sao Paulo, Brazil
Telephone: (55-11) 945-9811
Country
Covered: Brazil

Beijing Regional Office - China

Cummins Corporation
China World Tower, Suite 917
China World Trade Center
No. 1 Jian Guo Men Wai
Beijing 100004
People's Republic of China
Telephone: (86-1) 505-4209/10
Countries
Covered:
China
Mongolia

Bogota Regional Office - Columbia

Cummins Engine Co. de Colombia S.A.
Carrera 11A No. 90-15 Of. 601/602
Bogota, D.E., Colombia
Telephone: (57-1) 610-4849

Mailing Address:
Apartado Aereo 90988
Bogota D.E., Colombia
Countries
Covered:
Argentina
Bolivia
Chile
Colombia
Ecuador
Paraguay
Peru
Uruguay

Lyon Regional Office - France

Cummins Diesel Sales Corporation
39, rue Ampere - Zone Industrielle
69680 Chassieu
France
Telephone: (33) 72-22-92-72
Countries
Covered:
Algeria
France
Guadeloupe
Guyana
Martinique
New Caledonia
Reunion

Gross-Gerau Regional Office - Germany

Cummins Diesel Deutschland GmbH
Odenwaldstr. 23
D-6080 Gross-Gerau
Germany
Telephone: (49-6152) 174-0
Countries Covered:
Albania
Bulgaria
*Czech Republic
Germany
Luxembourg
Poland
Romania
Southeastern Europe
Slovika
*Marine Only

Hong Kong Regional Office - Hong Kong

Cummins Engine H.K. Ltd.
Unison Industrial Centre
15th Floor, Units C & D
27-31 Au Pui Wan Street
P. O. Box 840 Shatin
Fo Tan, Shatin, N.T.
Hong Kong
Telephone: (852) 606-5678
Country
Covered: Hong Kong

Pune Kirloskar Regional Office - India

Kirloskar Cummins Limited
Kothrud
Pune - 411 029, India
Telephone: (91-212) 33-0240, 33-5435, 33-1105
Countries Covered: Bhutan, India, Nepal

Milan Regional Office - Italy

Cummins Diesel Italia S.P.A.
Piazza Locatelli 8
Zona Industriale
20098 San Giuliano Milanese
Milan, Italy
Telephone: (39-2) 982-81235/6/7
Country Covered: Italy

North Asia Regional Office - Japan

Cummins Diesel Sales Corporation
1-12-10 Shintomi
Chuo-ku, Tokyo 104
Japan
Telephone: (81-3) 3555-3131/2/3/4/5
Country Covered: Japan

Seoul Regional Office - Korea

Cummins Korea Ltd.
5th Floor, Hye Sung Building
35-26 Sam Sung Dong, Kang Nam Ku
Seoul, South Korea
Telephone: (82-2) 516-0431/2/3, 517-3370/1
Country Covered: South Korea

Cummsa Regional Office - Mexico

Cummins, S.A. de C.V.
Arquimedes No. 209
Col. Polanco
11560 Mexico, D.F.
Mexico
Telephone: (52-5) 254-3822/3783/3622

Mailing/Shipping Address:
Gonzalez de Castilla Inc.
P.O. Box 1391
4605 Modern Lane
Modern Industrial Park
Laredo, TX 78040
Telephone: (512) 722-5207
Country Covered: Mexico

Moscow Regional Office - Russia

Cummins Engine Co., Inc.
Park Place
Office E708
Leninsky Prospect 113
Russia 11798
Telephone: (7-502) 256-5122 or 256-5123
Countries Covered: Armenia, Azerbaijan, Bolarus, Estonia, Georgia, Kirghizia, Latvia, Lithuania, Moldova, Russia, Tadzhikstan, Turkmenistan, Ukraina, Uzbekistan

South And East Asia Area Office - Singapore

Cummins Diesel Sales Corporation
8 Tanjong Penjuru
Jurong Industrial Estate
Singapore 2260
Telephone: (65) 265-0155
Countries Covered: Bangladesh, Brunei, Burma/Mynamar, Cambodia, China, Hong Kong, Indonesia, Laos, Macau, Malaysia, Mongolia, Philippines, Singapore, Sri Lanka, Taiwan, Thailand, Vietnam

Taipei Regional Office - Taiwan

Cummins Corporation - Taiwan
12th Floor, No. 149
Min-Sheng E. Road
Section 2
Taipei, Taiwan
R.O.C. 104
Telephone: (886-2) 515-0891
Country Covered: Taiwan

Turkey and Iran Regional Office - Turkey

Cummins Corporation
Istanbul Office
Buyukdere Cad.
Beytem Han, Kat 11
Sisli 80220
Istanbul
Telephone: (90-1) 246-2575/2775/2545
Countries Covered: Iran, Turkey

Middle East/Africa Regional Office - Daventry (U.K.)

Cummins Engine Company Ltd.
Royal Oak Way South
Daventry, Northants NN11 5NU
England
Telephone: (44-327) 76000
Countries Covered:

MIDEAST

Afghanistan	Jordan	Saudi Arabia
Bahrain	Kuwait	Sudan
Cyprus	Lebanon	Syria
Djibouti	Oman	U.A.E.
Egypt	Pakistan	Yemen
Iraq	Qatar	

NORTH/WEST AFRICA

Benin	Gabon	Mauritania
Burkina-Paso	Gambia	Morocco
Cameroon	Ghana	Niger
Cape Verde	Guinea	Nigeria
Central African Republic	Guinea-Bissau	Sao Tome & Principe
Chad	Liberia	Senegal
Cote d'Ivoire	Libya	Siera Leone
Equatorial Guinea	Mali	Togo
	Malta	Tunisia

SOUTH AFRICA

Botswana	Namibia	Swaziland
Lesotho	South Africa	

New Malden Regional Office - U.K.

Cummins Engine Company Limited
46-50 Coombe Road
New Malden
Surrey KT3 4QL
England
Telephone: (44-81) 949-6171
Countries Covered: Ireland, United Kingdom

Latin America Regional Office - Miramar (U.S.A.)

Cummins Americas, Inc.
Miramar Park of Commerce
3450 Executive Way
Miramar, FL 33025
Telephone: (305) 431-5511
Countries Covered:

Argentina	Guatemala
Bolivia	Honduras
Chile	Nicaragua
Colombia	Panama
Costa Rica	Paraguay
Dominican Republic	Peru
El Salvador	Uruguay
Eucador	Venezuela

Caracas Regional Office - Venezuela

Cummins Engine Company
Oficina de Delegado
Torre La Primera, Oficina 5-D
Av. Francisco de Miranda
Chacao, Caracas 1060

Mailing Address:
Cummins Engine Company M-227
c/o Jet Cargo International
P.O. Box 020010
Miami, FL 33102-0010 U.S.A.
Telephone: (58-2) 32-0563, 32-718
Countries Covered: Costa Rica, Dominican Republic, El Salvador, Guatemala, Honduras, Nicaragua, Panama, Venezuela

East/Southern Africa Regional Office - Harare, Zimbabwe

Cummins Zimbabwe (Private) Limited
72 Birmingham Road
Southerton
Harare, Zimbabwe

Mailing Address:
P.O. Box ST363
Southerton
Harare, Zimbabwe
Telephone: (263-4) 67645, 60553, 69220
Countries Covered:

Angola	Reunion
Burundi	Rwanda
Comoros Island	Seychelles
Congo	Somalia
Ethiopia	Tanzania
Kenya	Uganda
Madagascar	Zaire
Malawi	Zambia
Mauritius	Zimbabwe
Mozambique	

Distributors - International

ABU DHABI
-See United Arab Emirates

AFGHANISTAN
-See Middle East Regional Office

ALBANIA
-See Germany Regional Office - Gross Gerau

ALGERIA

Algiers
Cummins Corporation
Bureau de Liaison
38, Lotissement Benachour Abdelkader Cheraga
43200 Wilaya de Tipasa
Algeria
Telephone: (213) 237-43-26

AMERICAN SAMOA
- See South Pacific Regional Office

ANDORRA
-See European Regional Office - Mechelen

ANTIGUA

Miami (Office In U.S.A.)
Cummins Southeastern Power, Inc.
9900 N.W. 77 Court
Hialeah Gardens, FL 33016
Telephone: (305) 821-4200

ARGENTINA

Buenos Aires
Distribuidora Cummins, S.A. (DICUMAR)
Av. Del Libertador 602 Piso 5
Buenos Aires, Argentina
Telephone: (54-1)814-1895/1395/1393

ARUBA, ISLAND OF
-See Netherlands Antilles

AUSTRIA

Neudoerfl
Cummins Diesel Motorenvertriebsges m.b.H. Trenner & Co.
Bickfordstr. 25
A-7201 Neudoerfl
Austria
Telephone: (43-2622) 77418/77625

BAHAMAS

Miami (Office in U.S.A.)
Cummins Southeastern Power, Inc.
9900 N.W. 77 Court
Hialeah Gardens, FL 33016
Telephone: (305) 821-4200

BAHRAIN

Bahrain
Yusuf Bin Ahmed Kanoo W.L.L.
P.O. Box 45, Manama
Bahrain
Telephone: (973) 400414/400506

BALEARIC ISLANDS

Madrid (Office in Spain)
Cummins Ventas y Servicio, S.A.
Torrelaguna, 56
28027 Madrid, Spain
Telephone: (34-91) 367-2000
376-2404

BANGLADESH

Dhaka
Equipment & Engineering Co., Ltd.
G.P.O. Box 2339
Dhaka 1000, Bangladesh

Location:
56, Dilkusha Commercial Area
2nd Floor/Eastern Block
Telephone: (880-2) 234357, 234060

BARBADOS

Miami (Office in U.S.A.)
Cummins Southeastern Power, Inc.
9900 N.W. 77 Court
Hialeah Gardens, FL 33016
Telephone: (305) 821-4200

BELGIUM

Brussels
Cummins Distributor
Belgium S.A.
623/629 Chaussee de Haecht
B-1030 Brussels, Belgium
Telephone: (24 hr.)
(32-2) 216-81-10

BELIZE

Tampa (Office in U.S.A.)
Cummins Southeastern Power, Inc.
5421 N. 59th Street
Tampa, FL 33610
Telephone: (813) 621-7202

BENIN
-See Togo

BERMUDA

Bronx (Office in U.S.A.)
Cummins Metropower, Inc.
890 Zerega Avenue
Bronx, NY 10473
Telephone: (718) 892-2400

BHUTAN

Pune (Office in India)
Cummins Diesel Sales & Service (India) Ltd.
35A/1/2, Erandawana
Pune - 411 038, India
(State of Maharashtra) India
Telephone: (91-212) 331234/331554/
331635/
330066/330166/
330356/331703

BOLIVIA

La Paz
Machinery & Auto Service
Casilla 4042
La Paz, Bolivia

Location:
Av. 20 de Octubre Esq.
Rosendo Gutierrez
Telephone: (591-2) 379650, 366394

BONAIRE, ISLAND OF
-See Netherlands Antilles

BOTSWANA
-See East and Southern Africa Regional Office
Harare

BRAZIL

Ananindeua
Marcos Marcelino & Companhia Ltda.
Rodovia BR-316, Km 9
67020-010 Ananindeua, Para,
Brazil
Telephone: (55-91) 235-4100/4132/
4143/4012

Belo Horizonte
Distribuidora Cummins Minas S.A.
31950-640 Olhos D'Agua Norte
Belo Horizonte, MG
Brazil
Telephone: (55-31) 288-1344

Campo Grande
Distribuidora Cummins Mato Grosso Ltda.
Rodovia BR 163 Km 01
79060-000 Campo Grande
Mato Grosso do Sul, Brazil
Telephone: (55-67) 787-1166

Curitiba
Distribuidora Cummins Parana S.A.
Rua Brasilio Itibere, 2195
80230 Curitiba, Parana
Brazil
Telephone: (55-41) 222-4036

Fortaleza
Distribuidora Cummins Diesel Do Nordeste Ltda.
Av. da Abolicao, 3882,
Mucuripe
60165-081 Fortaleza, Ceara
Brazil
Telephone: (55-85) 263-1212

Goianian
Distribuidora de Motores Cummins Centro Oeste Ltda.
Av. Caiapo 777 - Setor Sta. Genoveva
74672-400 Goiania, Goias
Brazil
Telephone: (55-62) 207-1010

Manaus
Distribuidora Cummins
Amazonas Ltda.
Estrada da Ponta Negra, 6080 - Sao Jorge
69037 Manaus, Amazonas,
Brazil
Telephone: (55-92) 656-5444

Porto Alegre
Distribuidora Cummins
Meridional S.A.
Rua Dona Alzira, 98, Sarandi
91110-010 Porto Alegre,
Rio Grande do Sul, Brazil
Telephone: (55-51) 340-8222

Rio de Janeiro
Distribuidora Cummins
Leste Ltda.
Rua Sariema, 138-Olaria
21030-550 Rio de Janeiro,
Rio de Janeiro, Brazil
Telephone: (55-21) 290-7899

Sao Paulo
Companhia Distribuidora
de Motores Cummins
Rua Martin Burchard, 291 - Bras
03043-020 Sao Paulo,
Sao Paulo, Brazil
Telephone: (55-11) 270-2311

BRITISH VIRGIN ISLANDS
-See Puerto Rico

BRUNEI
-See Malaysia

BURKINA - FASO
-See North/West Africa Regional Office - Daventry

BULGARIA
-See Germany Regional Office - Gross Gerau

BURMA

Kuala Lumpur (Office In Malaysia)
Contact: Scott &
English (M) Sdn Bhd
P.O. Box 10324
50710 Kuala Lumpur
West Malaysia

Location:
16 Jalan Chan Sow Lin
55200 Kuala Lumpur
West Malaysia
Telephone: (60-3) 2211033

BURUNDI

Brussels (Office in Belgium)
Bia, S.A.
Rameistraat, 123
B-3090 - Overijse, Belgium
Telephone: (32-2) 6892811

CAMBODIA
-See South & East Asia
Regional Office - Singapore

CANARY ISLANDS

Madrid (Office in Spain)
Cummins Ventas y
Servicio, S.A.
Torrelaquna, 56
28027 Madrid, Spain
Telephone: (34-91) 3672000/3672404

CAPE VERDE
-See North/West Africa
Regional Office - Daventry

CENTRAL AFRICAN REPUBLIC
-See North/West Africa
Regional Office - Daventry

CEYLON
-See Sri Lanka

CHAD
-See North/West Africa
Regional Office - Daventry

CHILE

Santiago
Distribuidora Cummins Diesel
S.A.C.I.
Casilla Postal 1230
Calle Bulnes 1203
Santiago, Chile

Corporate Office:
Av. Providencia 2653, Office 1901
Santiago, Chile
Telephone: (56-2) 698-2113/4/5,
697-3566/7/8,
697-2709

CHINA, PEOPLE'S REPUBLIC
-See China Regional
Office - Beijing

COLOMBIA

Barranquilla
Cummins de Colombia S.A.
Apartado Aereo 5347
Barranquilla, Colombia

Location: Calle 30, No. 19 - 21
Telephone: (57-58) 40-02-06/40-13-46

Bogota
Cummins Colombiana Ltda.
Apartado Aereo No. 7431
Bogota, D.E. Colombia

Location:
Av. Americas X Carrera
42C No. 19-45
Telephone: (57-1) 244-5688/5882

Bucaramanga
Cummins API, Ltda.
Apartado Aereo 352
Bucaramanga, Colombia

Location:
Autopista a Giron, Km 7
Telephone: (57-76) 468060

Cali
Distribuidora Cummins del Valle, Ltda.
Apartado Aereo No. 6398
Cali, Colombia

Location: Av. 3a. # 39-35 - Vipasa
Telephone: (57-3) 65-4343

Medellin
Equipos Tecnicos Ltda.
Apartado Aereo No. 2046
Medellin, Colombia

Location: Carrera 52 No. 10-184
Telephone: (57-4) 255-4200

Pereira
Equipos Tecnicos Ltda. C.Q.R.
Apartado Aereo No. 1240
Pereira, Colombia

Location: Carrera 8a. No. 45-39
Telephone: (57-63) 366341

COMOROS
-See East and Southern
Africa Regional Office
Harare

CONGO, PEOPLE'S REPUBLIC

Brussels (Office in Belgium)
Bia, S.A.
Rameistraat, 123
B-3090
Overijse, Belgium
Telephone: (32-2) 6892811

CORSICA
-See France

COSTA RICA

San Jose
Servicios Unidos, S.A.
P.O. Box 559
San Jose, Costa Rica

Location:
100 metros al este de
Excelsior Antiguo
Curridabat, San Jose
Telephone Office: (506) 53-93-93
Telephone Service Shop:
(506) 26-00-76

CUBA

Miami (Office in U.S.A.)
Cummins Southeastern Power, Inc.
9900 N.W. 77 Court
Hialeah Gardens, FL 33016
Telephone: (305) 821-4200

CYPRUS

Nicosia
Alexander Dimitriou & Sons Ltd.
P.O. Box 1932
Nicosia, Cyprus

Location:
4 Salamis Avenue
Telephone: (357-2) 349450

CZECH REPUBLIC
-See European Regional
Office - Mechelen

DENMARK

Glostrup

Preben Lange Industrimaskiner A/S
Post Box 166
2605 Broendby, Denmark

Location:
Midtager 22
Telephone: (45-43) 96-21-61

DJIBOUTI

-See Middle East Regional Office - Daventry

DOMINICA

Miami (Office in U.S.A.)

Cummins Southeastern Power, Inc.
9900 N.W. 77 Court
Hialeah Gardens, FL 33016
Telephone: (305) 821-4200

DOMINICAN REPUBLIC

Santo Domingo

Argico C. Por A.
P.O. Box 292-2 Feria
Santo Domingo
Dominican Republic, ZP-6

Location:
Calle Jose A. Soler
No. 3, ESQ.
Avenida Lope de Vega
Telephone: (809) 562-6281

DUBAI

-See United Arab Emirates

ECUADOR

Guayaquil

Motores Cummins (MOTCUM) S.A.
P.O. Box 1062
Guayaquil, Ecuador

Location:
Avenida Carlos Julio
Arosemena Km. 4
Telephone: (593-4) 203995/201177

Quito

Rectificadora Botar S.A.
P.O. Box 17-01-3344
Quito, Ecuador

Location:
Av. 10 de Agosto No. 5980
Telephone: (593-2) 465-176/177/
178/195/197

EGYPT

Cairo

ADAT
P.O. Box 1572
Cairo, Egypt

Sales and Service Location:
25, Pyramid Road
Giza, Cairo, Egypt
Telephone: (20-2) 384-6607/384-6609
385-4001/2/4/5/6/8/9

EL SALVADOR

San Salvador

Salvador Machinery
Company, S.A. de C.V.
P.O. Box 125
San Salvador, El Salvador

Location:
Blvd. Ejercito Nacional
Telephone: (503) 711022, 228388

ENGLAND

-See United Kingdom

EQUATORIAL GUINEA

-See North/West Africa Regional Office - Daventry

ESTONIA

- See Moscow Regional Office, Moscow

FAROE ISLANDS

Wellingborough (Office in United Kingdom)

Cummins Diesel
Denington Industrial Estate
Wellingborough
Northants NN8 2QH,
England
Telephone: (44-933) 276231

FERNANDO PO

-See Spain

FIJI

- See Cummins Diesel Sales & Service New Zealand Ltd.

FINLAND

Helsinki

Machinery OY
P.O. Box 56
SF 00511 Helsinki, Finland

Location:
Teollisuuskatu 29
Telephone: Int: (358-9) 77221

FRANCE

Lyon

Cummins Diesel
Sales Corporation
39, rue Ampere Z.I.
69680 Chassieu, France
Telephone: (33) 72-22-92-72
Parts and Service Telephone: (33) 72-22-92-69

GABON

- See North/West Africa Regional Office - Daventry

GAMBIA

Senegal (Matforce)

GEORGIA

-See Moscow Regional Office - Moscow

GERMANY

Gross-Gerau

Cummins Diesel Deutschland GmbH
P.O. Box 1134
D-6080 Gross-Gerau,
Germany

Location: Odenwaldstr. 23
Telephone: (49-6152) 174-0

GHANA

Accra

Leyland DAF (Ghana) Ltd.
P.O. Box 2969
Accra, Ghana

Location:
39/40 Ring Road South
Industrial Estate
Telephone: (233-21) 22-88-06

GREECE

Athens

Eliopoulos Brothers Ltd.
P.O.B. 51528
14 Km. National Rd.
Athens-Lamia
14510 Kifissia, Greece
Telephone: (30-1) 6202401/6202066/
6201955

GREENLAND

-See Denmark

GRENADA

Miami (Office in U.S.A.)

Cummins Southeastern Power, Inc.
9900 N.W. 77 Court
Hialeah Gardens, FL 33016
Telephone: (305) 821-4200

GUADELOUPE

Miami (Office in U.S.A.)

Cummins Southeastern Power, Inc.
9900 N.W. 77 Court
Hialeah Gardens, FL 33016
Telephone: (305) 821-4200

GUAM

Barrigada

Mid-Pac Far East, Inc.
Airport Industrial Park
825 Tiyan Parkway
Barrigada, Guam 96921
Telephone: (671) 632-5160

GUATEMALA

Guatemala City

Maquinaria y Equipos, S.A.
P.O. Box 2304
Guatemala City, Guatemala

Location:
Carretera Amatitlan
Km 12 zona 12
Telephone: (502-2) 773334/7/9

GUINEA BISSAU

-See North/West Africa Regional Office - Daventry

GUYANA

Miami (Office in U.S.A.)

Cummins Southeastern Power, Inc.
9900 N.W. 77 Court
Hialeah Gardens, FL 33016
Telephone: (305) 821-4200

GUYANA, FRENCH

Miami (Office in U.S.A.)

Cummins Southeastern Power, Inc.
9900 N.W. 77 Court
Hialeah Gardens, FL 33016
Telephone: (305) 821-4200

HAITI

Miami (Office in U.S.A.)

Cummins Southeastern Power, Inc.
9900 N.W. 77 Court
Hialeah Gardens, FL 33016
Telephone: (305) 821-4200

HOLLAND

-See Netherlands

HONDURAS

Tegucigalpa

Comercial Laeisz
Honduras, S.A.
P.O. Box 1022
Tegucigalpa, D.C., Honduras

Location:
Zona La Burrera,
Blvd. Toncontin
Frente a Gasolinera Esso.
Telephone: (504) 333570/335615

HONG KONG

Kowloon

Cummins Engine H. K. Ltd.
P.O. Box 840 Shatin
N.T., Hong Kong

Location:
Unison Industrial Centre
15th Floor, Units C & D
27-31 Au Pui Wan Street
Fo Tan, Shatin, Hong Kong
Telephone: (852) 606-5678

INDIA

Pune

Cummins Diesel Sales &
Service (India) Ltd.
35A/1/2, Erandawana
Pune - 411 038, (State of Maharashtra)
India
Telephone: (91-212)
331234, 331554,
331635, 330066,
330166, 330356,
331703

Bombay

Cummins Diesel Sales & Service (I) Ltd.
298, Perin Nariman Street, Fort,
Bombay 400001, India
Telephone: (91-22) 2863566/2862247

Calcutta

Cummins Diesel Sales & Service (I) Ltd.
94, Tivoli Court, I/C Ballygunge
Circular Road
Calcutta 700 019 (West Bengal), India
Telephone: (91-33) 2478065/2470481/
2470774

New Delhi

Cummins Diesel Sales & Service (I) Ltd.
Flat No. 307, Meghdoot Building
94 Nehru Place
New Delhi 110 019, India
Telephone: (91-11) 6431051/6445756/
6452817

Raipur

Cummins Diesel Sales & Service (I) Ltd.
Plot No. 15, Jalashay Marg
Choube Colony
Raipur 492 001 (Madhya Pradesh), India
Telephone: (91-771) 24994/23157/29498

Ranchi

Cummins Diesel Sales & Service (I) Ltd.
'Shanti Kunj' C-202, Vidyalaya Marg
Road No. 1, Ashoknagar
Ranchi 834 002 (Bihar)
India
Telephone: (91-651) 301948/303623

INDONESIA

Jakarta

P.T. Alltrak 1978
P.O. Box 64/KBYL
Jakarta Selatan 12330, Indonesia

Location:
J1. R.S.C. Veteran No. 4
Bintaro, Rempoa
Telephone: (62-21) 736-1978/736-3302

IRAN

Tehran

Technical Service Development
Company
P.O. Box 13445/741
No. 152 Sohravardi Crossing
Dr. Beheshti Avenue
Tehran, Iran
Telephone:
Head Office: (98-21) 846666, 851021-7
Work Shop: (98-21) 995021-2/993240

IRAQ

- See Middle East Regional
Office - Daventry

IRELAND

Wellingborough (Office in England)

Cummins Diesel
Denington Estate
Wellingborough
Northants NN8 2QH, England
Telephone: (44-933) 276231

ISRAEL

Tel Aviv

Israel Engines &
Trailers Co. Ltd.
Levinson Brothers Engineers
P. O. Box 390
33 Hahashmal Street
Tel Aviv, Israel 61003
Telephone: (972-3) 5607671

ITALY

Milan

Cummins Diesel Italia S.p.A.
Piazza Locatelli, 8
Zona Industriale Sesto Ulteriano
20098 S. Giuliano
Milanese (Milan), Italy
Telephone: (39-2) 9828-1235/6/7

IVORY COAST

-See Cote d' Ivoire

JAMAICA

Miami (Office in U.S.A.)

Cummins Southeastern Power, Inc.
9900 N.W. 77 Court
Hialeah Gardens, FL 33016
Telephone: (305) 821-4200

JAPAN

Tokyo

Cummins Diesel (Japan) Ltd.
1-12-10-Shintomi
Chuo-ku, Tokyo 104
Japan
Telephone: (81-3) 3555-8511

JORDAN

Amman

S.E.T.I. Jordan Limited
P.O. Box 8053
Amman, Jordan
Telephone: (962-6) 621867/621884

KENYA

Nairobi

Werrot & Company Limited
P.O. Box 41216
Nairobi, Kenya

Location:
Lusaka Road
Telephone: (254-150) 20316

KOREA, SOUTH

Seoul

Hwa Chang Trading Co., Ltd.
Central P.O. Box No. 216
Seoul, South Korea

Location:
143-11 Doksan-dong, Kuro-ku
Telephone: (82-2) 854-0071/2/3/4/5,
869-1411/2/3

KUWAIT

Kuwait

General Transportation &
Equipment Co.
(Sales Department)
P.O. Box 1096
13011 Safat, Kuwait

Location:
Shuwaikh Behind
Canada Dry Factory
Telephone: (965) 4833380/1/2

Kuwait

General Transportation &
Equipment Co.
(Service Department)
East Ahmadi Area
13011 Safat, Kuwait
Telephone: (965) 3981577

LAOS

-See South and East
Asia Regional Office
- Singapore

LATVIA

- See Moscow Regional
Office - Moscow

LEBANON

Beirut

S.E.T.I. Charles Keller
S.A.L.
B.P. 16-6726
Beirut, Lebanon

Location:
Corniche du Fleuve
Telephone: (961-1) 425040/41

LESOTHO

-See South Africa

LIBYA

- See North/West Africa Regional
Office - Daventry

LIECHTENSTEIN

-See Switzerland

LUXEMBOURG

Gross Gerau (Office in Germany)

Cummins Diesel Deutschland GmbH
P.O. Box 11 34
Odenwaldstrasse 23
D-6080 Gross-Gerau, Germany
Telephone: (49-6152) 174-0

MACAU

-See Hong Kong

MADAGASCAR

-See East and Southern
Africa Regional Office -
Harare

MADEIRA ISLANDS

-See Portugal

MALAYSIA

Kuala Lumpur

Cummins Diesel Sales & Service
Div. of Scott & English
(M) Sdn. Bhd.
P.O. Box 10324
50710 Kuala Lumpur, West Malaysia

Location:
16 Jalan Chan Sow Lin
55200 Kuala Lumpur
Telephone: (60-3) 2211033

MALI

-See Senegal (Matforce)

MALTA

Valletta

Plant & Equipment Ltd.
Regency House
254, Republic Street
Valletta, Malta
Telephone: (356) 23-26-20, 23-33-43, 23-16-23, 24-75-17

MARTINIQUE

Miami (Office in U.S.A.)

Cummins Southeastern Power, Inc.
9900 N.W. 77 Court
Hialeah Gardens, FL 33016
Telephone: (305) 821-4200

MEXICO

Guadalajara

Cummins Del Occidente, S.A.
Lazaro Cardenas No. 2950
Fracc. Alamo Industrial
45560 Guadalajara, Jal. Mexico
Telephone: (52-3) 670-93-06, 670-53-38, 670-63-61, 670-62-33

Monterrey

Tecnica Automotriz, S.A.
Av. Alfonso Royes
No. 3637 Nte.
Monterrey, Nuevo Leon, Mexico
Telephone: (52-83) 51-41-51, 51-46-56

Merida

Cummins Del Sureste, S.A. de C.V.
Av. Aviacion Civil No. 647
Esquina Calle 100
Col. Sambula
97259 Merida, Yucatan, Mexico
Telephone: (52-99) 24-11-55, 24-00-15

Puebla

Cummins de Oriente, S.A. de C.V.
Av. Reforma No. 2112,
Puebla, Pue. Mexico
Telephone: (52-22) 48-76-74, 48-76-75

Queretaro

Distribuidor Cummins Del Centro, S.A.
de C.V.
Blvd. Bernardo Quintana No. 518
Col. Arboledas
C.P. 76140 Queretaro, Qro., Mexico
Telephone: (52-42) 12-41-90, 12-58-90, 12-62-94
14-04-16, 14-08-81, 14-15-91

Tlalnepantla

Distribuidor Cummins
Metropolitana, S.A. DE C.V.
Sor Juana Ines de la Cruz No. 555
54000 Tlalnepantla, Edo. de Mexico,
Mexico
Telephone: (52-5) 327-38-00, 390-64-37, 390-12-27

MOROCCO

Casablanca

Societe Auto-Hall, S.A.
44 Avenue Lalla Yacout
Casablanca, Morocco
Telephone: (212) 31-84-60, 31-70-52, 31-90-56, 31-70-44

MOZAMBIQUE

-See East and Southern
Africa Regional Office -
Harare

NAMIBIA (Southwest Africa)

Windhoek

Propower, Namibia
P.O. Box 3637, Windhoek 9000
Namibia (Southwest Africa)

Location: 7 Nasmyth Street
Southern Inudustria
Telephone: (264-61) 37693

NEPAL

Pune (Office in India)

Cummins Diesel Sales &
Service (India) Ltd.
35A/1/2, Erandawana
Pune, - 411 038, (State of Maharashtra)
India
Telephone: (91-212) 331234, 331554, 331635, 330066, 330166, 330356, 331703

NETHERLANDS

Dordrecht

Cummins Diesel Sales &
Service, b.v.
Galvanistraat 35
3316 GH Dordrecht
Netherlands
Telephone: (31-78) 18-12-00

NETHERLANDS ANTILLES

Miami (Office in U.S.A.)

Cummins Southeastern Power, Inc.
9900 N.W. 77 Court
Hialeah Gardens, FL 33016
Telephone: (305) 821-4200

NEW CALEDONIA

-See South Pacific Regional
Office - Melbourne

NEW GUINEA

-See Papua New Guinea

NICARAGUA

Managua

F. Alf. Pellas & Cia.
Apartado Postal No. 46
Managua, Nicaragua

Location:
6a. Calle
30 y 31 Avs. N.O., Zona 5
Telephone: (505-2) 660616

NIGERIA

Lagos

SCOATRAC MOSEL
P.M.B. 21108
Ikeja, Lagos
Nigeria

Location:
Apapa-Oshodi Expressway
Isolo Industrial Estate,
Isolo
Telephone: (234-1) 52-15-39, 52-19-31, 52-46-70

Paris (Office in France)

SCOATRAC MOSEL
c/o SCOA
9 et 11 rue Robert de Flers
75740 Paris, Cedex 15
France
Telephone: (33-1) 40-58-48-48

NORTHERN IRELAND

-See United Kingdom

NORWAY

Oslo

Cummins Diesel Salg & Service A/S
P.O. 6288
Etterstad 0603, Oslo 6
Norway

Location:
Verkseler Furulunds vei 11
Telephone: (47) 22326110

OMAN

Ruwi

Universal Engineering
Services L.L.C.
P.O. Box 5688
Ruwi
Sultanate of Oman
Telephone: (968) 590830, 591304

PAKISTAN

Karachi

-See Middle East
Regional Office - Daventry

PANAMA

Panama City

Grupo Tiesa, S.A.
Apartado Postal #55-0549
Partillo, Panama
Telephone: (507) 67-3866

PAPUA NEW GUINEA

Sydney (Office in Australia)

Cummins Diesel Sales & Service
P.O. Box 150
Cabramatta, 2166
New South Wales, Australia

PARAGUAY

Asuncion

Automotores y Maquinaria,
S.R.L.
Yegros y Fulgencio R. Moreno
P.O. Box 1160
Asuncion, Paraguay
Telephone: (595-21) 493111, 493115

PERU

Lima

Comercial Diesel
del Peru S.A.
P.O. Box 14-0234
Lima, Peru

Location:
Ave. V.R. Haya
de la Torre 2648
Lima 3, Peru
Telephone: (51-14) 74-3173/4374/ 3144/2281

PHILIPPINES

EDSA

Power Systems, Inc. EDSA
P.O. Box 3241
Manila
Philippines 1501

Location:
79E. Delos Santos Ave.
Mandaluyong, Metro Manila
Telephone: (63-2) 791769, 791771, 5311945, 5315448, 5311934, 5312531, 53414513

POLAND

-See Germany Regional Office - Gross-Gerau

PORTUGAL

Lisbon

Electro Central
Vulcanizadora, Lda.
P.O. Box 3077
1302 Lisbon, Portugal

Location:
Rua Conselheiro
Martins de Carvalho
Lote 1480
1400 Lisboa (Restelo)
Telephone: (351-1) 3015361

QATAR

Doha

Jaidah Motors & Trading Co.
P.O. Box 150
Doha, Qatar (Arabian Gulf)
Telephone: (974) 810000

REUNION

-See Lyon Regional Office - Lyon

RIO DE ORO

-See Spain

ROMANIA

-See Germany Regional Office - Gross-Gerau

RUSSIA

-See Moscow Regional Office - Moscow

RWANDA

Brussels (Office in Belgium)

Bia, S.A.
Rameistraat, 123
B-3090 - Overijse, Belgium
Telephone: (32-2) 6892811

ST. LUCIA

Miami (Office in U.S.A.)

Cummins Southeastern Power, Inc.
9900 N.W. 77 Court
Hialeah Gardens, FL 33016
Telephone: (305) 821-4200

ST. VINCENT

Miami (Office in U.S.A.)

Cummins Southeastern Power, Inc.
9900 N.W. 77 Court
Hialeah Gardens, FL 33016
Telephone: (305) 821-4200

SAN MARINO

-See Italy

SAO TOME AND PRINCIPE

-See North/West Africa Regional Office - Daventry

SAUDI ARABIA

Dammam

General Contracting Company
P.O. Box 5111
Dammam 31422, Saudi Arabia
Telephone: (966-3) 842-1216

SCOTLAND

-See United Kingdom

SENEGAL

Dakar

Matforce
B.P. 397
Dakar, Senegal

Location:
10 Avenue Faidherbe
Telephone: (221) 22-30-40

SEYCHELLES

-See East/Southern Africa Regional Office - Harare

SIERRA LEONE

-See North/West Africa Regional Office - Daventry

SINGAPORE

Singapore

Applied Diesel Sales & Service Pte Ltd
8 Tanjong Penjuru
Jurong Industrial Estate
Singapore 2260
Telephone: (65) 261-3555

SLOVAKIA

- See European Regional Office - Mechelen

SOLOMON ISLANDS

-See South Pacific Regional Office - Melbourne

SOMALIA

-See East and Southern Africa Regional Office - Harare

SOUTH AFRICA

Johannesburg

Propower Pty. Ltd.
Private Bag X4
Wendywood 2144
South Africa

Location:
13 Eastern Service Roade
Kelvin 2054
Telephone: (27-11) 444-3225

SOUTHWEST AFRICA

-See Namibia

SPAIN

Madrid

Cummins Ventas y
Servicio S.A.
Torrelaguna, 56
28027 Madrid, Spain
Telephone: (34-91) 367-2000/3672404

SPANISH GUINEA

-See Spain

SRI LANKA

Colombo

Trade Promoters Ltd
P.O. Box 321
69, Walukarama Road
Colombo 3
Sri Lanka
Telephone: (94-1) 573927, 574651, 575005

SUDAN

Khartoum

Bittar Engineering Ltd.
P.O. Box 1011
Gamhouria Street
Khartoum, Sudan
Telephone: (249-11) 70952, 71245, 70306

SURINAM

Miami (Office in U.S.A.)

Cummins Southeastern Power, Inc.
9900 N.W. 77 Court
Hialeah Gardens, FL 33016
Telephone: (305) 821-4200

SWAZILAND

-See South Africa

SWEDEN

Stockholm

SMA Maskin AB
Aggelundavagen 7
S-17562 Jarfalla
Sweden
Telephone: (46-8) 621-25-00

SWITZERLAND

Regensdorf

Robert Aebi AG
Riedthofstrasse 100
8105 Regensdorf
Switzerland
Telephone: (41-1) 842-5111

SYRIA

Damascus

Puzant Yacoubian & Sons
P.O. Box 3617
Damascus, Syria

Location:
Abou Baker El Saddik Street
Kafar Sousse Square
Telephone: (963-11) 231547/8/9

TAHITI, ISLAND OF

-See French Polynesia

TAIWAN

Taipei

Cummins Corporation - Taiwan Branch
12th Floor, No. 149
Min-Sheng E. Road, Sec. 2
Taipei, Taiwan
Telephone: (886-2) 515-0891

TANZANIA

Dar es Salaam

Riddoch Motors 1987 Ltd
P.O. Box 40040
Dar es Salaam
Tanzania

Location:
92 Kipawa-Pugu Road
Dar es Salaam
Telephone: (255-51) 44493, 41140

THAILAND

Bangkok

Diethelm & Company Ltd.
1696 New Petchburi Road
Bangkok 10310, Thailand
Telephone: (66-2) 254-4900

TOGO (and BENIN)

Lome

Togomat
B.P. 1641
Lome, Togo

Location:
Zone Industrielle CNPPME
Telephone: (228) 21-23-95

TONGA, ISLAND OF

- See South Pacific Regional Office - Melbourne

TRINIDAD and TOBAGO

Miami (Office in U.S.A.)

Cummins Southeastern Power Inc.
9900 N.W. 77 Court
Hialeah Gardens, FL 33016
Telephone: (305) 821-4200

TURKEY

Istanbul

Hamamcioglu Muesseseleri
Ticaret T.A.S.
P.K. 136
80222 Sisli
Istanbul, Turkey

Location:
Buyukdere Caddesi, 13/A
80260 Sisli
Istanbul, Turkey
Telephone: (90-1) 231-3406, 234-5123

UKRAINA

- See Moscow Regional Office - Moscow

UNITED ARAB EMIRATES

Abu Dhabi

Technical Oilfield Supplies Centre
P.O. Box 2647
Abu Dhabi,
United Arab Emirates
Telephone: (971-2) 723863, 723298

UNITED KINGDOM

Wellingborough

Cummins Diesel
Denington Estate
Wellingborough
Northants NN8 2QH, England
Telephone: (44-933) 276231

UPPER VOLTA

-See Burkina - Faso

URUGUAY

Montevideo

Santaro S.A.
P.O. Box 379
Montevideo
Uruguay

Location:
Avenida Millan No. 2441
Telephone:(598-2) 293908

U.S.S.R.

-See Moscow Regional Office - Moscow

VATICAN CITY

-See Italy

VENEZUELA

Caracas

Sudimat
Apartado Postal 1322
Carmelitas
Caracas 1010
Venezuela

Location:
Final Avenida San Martin
Urb. la Quebradita
Caracas 1061
Telephone: (58-2) 442-6161/2647

VIETNAM

-See South and East Asia Regional Office - Singapore

WESTERN SAMOA

- See South Pacific Regional Office - Melbourne

YEMEN ARAB REPUBLIC

Sana'a

Zubieri Trading Co.
P.O. Box 535
Sana'a, Yemen Arab Republic

Location:
Zubieri Street
Telephone: (967-1) 244400/79149

YEMEN, SOUTH

-See Middle East Regional Office - Daventry

YUGOSLAVIA

- See Southeastern Europe

ZAIRE

Brussels (Office in Belgium)

N.V. Bia, S.A.
Rameistraat, 123
B-3090 - Overijse, Belgium
Telephone: (32-2) 689-28-11

ZAMBIA

Ndola

N.E.I. (Zambia) Ltd.
P.O. Box 71501
Ndola, Zambia
Telephone: (260-2) 610729

ZIMBABWE

Harare

Cummins Zimbabwe (Pvt) Ltd.
P.O. Box ST363
Southerton
Harare, Zimbabwe

Location:
72 Birmingham Road
Southerton, Harare
Telephones: (263-4) 67645, 69220

Section C - Component Manufacturers

Section Contents

Page

Component Manufacturers' Addresses C-2
Air Compressors C-2
Air Cylinders C-2
Air Heaters C-2
Air Starting Motors C-2
Alternators C-2
Auxiliary Brakes C-2
Belts C-2
Catalytic Convertors C-2
Clutches C-2
Coolant Heaters C-2
Drive Plates C-2
Electric Starting Motors C-3
Engine Protection Controls C-3
Fan Clutches C-3
Fans C-3
Filters C-3
Flexplates C-3
Fuel Warmers C-3
Gauges C-3
Governors C-3
Heat Sleeves C-4
Hydraulic and Power Steering Pumps C-4
Oil Heaters C-4
Torque Converters C-4

Component Manufacturers' Addresses

NOTE: The following list contains addresses and telephone numbers of suppliers of accessories used on Cummins engines. Suppliers may be contacted directly for any specifications **not** covered in this manual.

Air Compressors

Bendix Heavy Vehicles Systems
Div. of Allied Automotive
901 Cleveland Street
Elyria, OH 44036
Telephone: (216) 329-9000

Holset Engineering Co., Inc.
1320 Kemper Meadow Drive
Suite 500
Cincinnati, OH 45240
Telephone: (513) 825-9600

Midland-Grau
Heavy Duty Systems
Heavy Duty Group Headquarters
10930 N. Pomona Avenue
Kansas City, MO 64153
Telephone: (816) 891-2470

Air Cylinders

Bendix Ltd.
Douglas Road
Kingswood
Bristol
England
Telephone: 0272-671881

Catching Engineering
2101 Roberts Drive
Broadview, IL 60153
Telephone: (312) 344-2334

Air Heaters

Fleetguard, Inc.
P.O. Box 6001
Cookeville, TN 38502
Telephone: (615) 526-9551

Kim Hotstart Co.
West 917 Broadway
Spokane, WA 99210
Telephone: (509) 534-6171

Air Starting Motors

Ingersoll Rand
Chorley New Road
Horwich
Bolton
Lancashire
England
BL6 6JN
Telephone: 0204-65544

Ingersoll-Rand Engine
Starting Systems
888 Industrial Drive
Elmhurst, IL 60126
Telephone: (312) 530-3800

StartMaster
Air Starting Systems
A Division of Sycon Corporation
P. O. Box 491
Marion, OH 43302
Telephone: (614) 382-5771

Alternators

Robert Bosch Ltd.
P.O. Box 98
Broadwater Park
North Orbital Road
Denham
Uxbridge
Middlesex UD9 5HG
England
Telephone: 0895-833633

Butec Electrics
Cleveland Road
Leyland
PR5 1XB
England
Telephone: 0744-21663

C.A.V. Electrical Equipment
P.O. Box 36
Warple Way
London
W3 7SS
England
Telephone: 01-743-3111

A.C. Delco Components Group
Civic Offices
Central Milton Keynes
MK9 3EL
England
Telephone: 0908-66001

C. E. Niehoff
2021 Lee Street
Evanston, IL 60202
Telephone: (708) 866-6030

Delco-Remy
P.O. Box 2439
Anderson, IN 46018
Telephone: (317) 646-7838

Leece-Neville Corp.
1374 E. 51st St.
Cleveland, OH 44013
Telephone: (216) 431-0740

Auxiliary Brakes

The Jacobs Manufacturing Company
Vehicle Equipment Division
22 East Dudley Town Road
Bloomfield, CT 06002
Telephone: (203) 243-1441

Belts

Dayco Rubber U.K.
Sheffield Street
Stockport
Cheshire
SK4 1RV
England
Telephone: 061-432-5163

T.B.A. Ind. Products
P.O. Box 77
Wigan
Lancashire
WN2 4XQ
England
Telephone: 0942-59221

Dayco Corp.
Belt Technical Center
P.O. Box 3258
Springfield, MO 65804
Telephone: (417) 881-7440

Gates Rubber Company
5610 Crawfordsville Road
Suite 2002
Speedway, IN 46224
Telephone: (317) 248-0386

Goodyear Tire and
Rubber Company
49 South Franklin Road
Indianapolis, IN 46219
Telephone: (317) 898-4170

Catalytic Convertors

Donaldson Company, Inc.
1400 West 94th Street
P.O. Box 1299
Minneapolis, MN 55440
Telephone: (612) 887-3131

Nelson Industries, Inc.
Exhaust and Filtration Systems
Highway 51 West, P.O. Box 428
Stoughton, WI 53589
Telephone: (608) 873-4373

Walker Manufacturing
3901 Willis Road
P.O. Box 157
Grass Lake, MI 49240
Telephone: (517) 522-5500

Clutches

Twin Disc International S.A.
Chaussee de Namur
Nivelles
Belguim
Telephone: 067-224941

Twin Disc Clutch Co.
Racine, WI 53403
Telephone: (414) 634-1981

Coolant Heaters

Fleetguard, Inc.
P.O. Box 6001
Cookeville, TN 38502
Telephone: (615) 526-9551

Drive Plates

Detroit Diesel Allison
Division of General Motors
Corporation
P.O. Box 894
Indianapolis, IN 46206
Telephone: (317) 244-1511

Electric Starting Motors

Butec Electrics
Cleveland Road
Leyland
PR5 1XB
England
Telephone: 0744-21663

C.A.V. Electrical Equipment
P.O. Box 36
Warple Way
London
W3 7SS
England
Telephone: 01-743-3111

A.C. Delco Components Group
Civic Offices
Central Milton Keynes
MK9 3EL
England
Telephone: 0908-66001

Delco-Remy
P.O. Box 2439
Anderson, IN 46018
Telephone: (317) 646-7838

Leece-Neville Corp.
1374 E. 51st Street
Cleveland, OH 44013
Telephone: (216) 431-0740

Nippondenso Sales, Inc.
24777 Denso Drive
P.O. Box 5133
Southfield, MI 48086-5133
Telephone: (313) 350-7500

Nippondenso of Los Angeles, Inc.
3900 Via Oro Avenue
Long Beach, CA 90810
Telephone: (310) 834-6352

Engine Protection Controls

Teddington Industrial
Equipment
Windmill Road
Sunburn on Thames
Middlesex
TW16 7HF
England
Telephone: 09327-85500

The Nason Company
10388 Enterprise Drive
Davisburg, MI 48019
Telephone: (313) 625-5381

Fan Clutches

Holset Engineering Co. Ltd.
P.O. Box 9
Turnbridge
Huddersfield
England
Telephone: 0484-22244

Horton Industries, Inc.
P.O. Box 9455
Minneapolis, MN 55440
Telephone: (612) 378-6410

Rockford Division
Borg-Warner Corporation
1200 Windsor Road
P.O. Box 7007
Rockford, IL 61125-7007
Telephone: (815) 633-7460

Transportation Components Group
Facet Enterprises, Inc.
Elmira, NY 14903
Telephone: (607) 737-8212

Fans

Truflo Ltd.
Westwood Road
Birmingham
B6 7JF
England
Telephone: 021-557-4101

Hayes-Albion
1999 Wildwood Avenue
Jackson, MI 49202
Telephone: (517) 782-9421

Engineering Cooling Systems
201 W. Carmel Drive
Carmel, IN 46032
Telephone: (317) 846-3438

Brookside
McCordsville, IN 46055
Telephone: (317) 335-2014

Aerovent
8777 Purdue Rd.
Indianapolis, IN 46268
Telephone: (317) 872-0030

Kysor
1100 Wright Street
Cadillac, MI 49601
Telephone: (616) 775-4681

Schwitzer
1125 Brookside Avenue
P.O. Box 80-B
Indianapolis, IN 46206
Telephone: (317) 269-3100

Filters

Fleetguard International Corp.
Cavalry Hill Industrial Park
Weedon
Northampton NN7 4TD
England
Telephone: 0327-41313

Fleetguard, Inc.
P.O. Box 6001
Cookeville, TN 38502
Telephone: (615) 526-9551

Flexplates

Corrugated Packing and
Sheet Metal
Hamsterley
Newcastle Upon Tyne
Telephone: 0207-560-505

Allison Transmission
Division of General Motors
Corporation
P.O. Box 894
Indianapolis, IN 46206
Telephone: (317) 244-1511

Allison Transmission
Division of General Motors
36501 Van Born Road
Romulus, MI 48174
Telephone: (313) 595-5711

Midwest Mfg. Co.
30161 Southfield Road
Southfield, MI 48076
Telephone: (313) 642-5355

Wohlert Corporation
708 East Grand River Avenue
Lansing, MI 48906
Telephone: (517) 485-3750

Fuel Warmers

Fleetguard, Inc.
P.O. Box 6001
Cookeville, TN 38502
Telephone: (615) 526-9551

Gauges

A.I.S.
Dyffon Industrial Estate
Ystrad Mynach
Hengoed
Mid Glamorgan
CF8 7XD
England
Telephone: 0443-812791

Grasslin U.K. Ltd.
Vale Rise
Tonbridge
Kent
TN9 1TB
England
Telephone: 0732-359888

Icknield Instruments Ltd.
Jubilee Road
Letchworth
Herts
England
Telephone: 04626-5551

Superb Tool and Gauge Co.
21 Princip Street
Birmingham
B4 61E
England
Telephone: 021-359-4876

Kabi Electrical and Plastics
Cranborne Road
Potters Bar
Herts
EN6 3JP
England
Telephone: 0707-53444

Datcon Instrument Co.
P.O. Box 128
East Petersburg, PA 17520
Telephone: (717) 569-5713

Rochester Gauge of Texas
11637 Denton Drive
Dallas, TX 75229
Telephone: (214) 241-2161

Governors

Woodward Governors Ltd.
P.O. Box 15
663/664 Ajax Avenue
Slough
Bucks
SL1 4DD
England
Telephone: 0753-26835

Woodward Governor Co.
1000 E. Drake Road
Fort Collins, CO 80522
Telephone: (303) 482-5811

Barber Colman Co.
1300 Rock Street
Rockford, IL 61101
Telephone: (815) 877-0241

United Technologies
Diesel Systems
1000 Jorie Blvd.
Oak Brook, IL 60521
Telephone: (312) 325-2020

Heat Sleeves

Bentley Harris Manufacturing Co.
100 Bentley Harris Way
Gordonville, TN 38563
Telephone: (313) 348-5779

Hydraulic and Power Steering Pumps

Hobourn Eaton Ltd.
Priory Road
Strood
Rochester
Kent
ME2 2BD
Telephone: 0634-71773

Honeywell Control Systems Ltd.
Honeywell House
Charles Square
Bracknell
Berks RG12 1EB
Telephone: 0344-424555

Sundstrand Hydratec Ltd.
Cheney Manor Trading Estate
Swindon
Wiltshire
SN2 2PZ
England
Telephone: 0793-30101

Sperry Vickers
1401 Crooks Road
Troy, MI 48084
Telephone: (313) 280-3000

Z.F.
P.O. Box 1340
Grafvonsoden Strasse
5-9 D7070
Schwaebisch Gmuend
West Germany
Telephone: 7070-7171-31510

Oil Heaters

Fleetguard, Inc.
P.O. Box 6001
Cookeville, TN 38502
Telephone: (615) 526-9551

Kim Hotstart Co.
West 917 Broadway
Spokane, WA 99210
Telephone: (509) 534-6171

Torque Converters

Twin Disc International S.A.
Chaussee de Namur
Nivelles
Belgium
Telephone: 067-224941

Twin Disc Clutch Co.
Racine, WI 53403
Telephone: (414) 634-1981

Rockford Division
Borg-Warner Corporation
1200 Windsor Road
P.O. Box 7007
Rockford, IL 61125-7007
Telephone: (815) 633-7460

Modine
1500 DeKoven Avenue
Racine, WI 53401
Telephone: (414) 636-1640

Section W - Warranty

Section Contents

Page

International Industrial W-7
Worldwide Industrial and Marine W-2
Worldwide Mobile Farming Equipment W-5

Worldwide Industrial and Marine

Engines Warranted

This warranty applies to new Engines sold by Cummins Engine Company, Inc., hereinafter 'Cummins', and delivered to the first user on or after June 1, 1993 that are used in generator drive application anywhere in the world where Cummins approved service is available. These Engines will have the following rating designations:

Standby Power Rating

Engines of this rating are applicable for supplying emergency power for the duration of the utility power outage. No overload capability is available for this rating. Under no condition is an Engine allowed to operate in parallel with the public utility at the Standby Power rating. This rating should be applied where reliable utility power is available. A standby rated engine is to be sized for a maximum of an 80 percent average load factor and 200 hours of operation per year. This includes less than 25 hours per year at the Standby Power rating. Standby rating should never be applied except in true emergency power outages. Negotiated power outages contracted with a utility company are not considered an emergency.

Unlimited Time Running Prime Power Rating

Engines with this rating are available for an unlimited number of hours per year in a variable load application. Variable load is not to exceed a 70 percent average of the Prime Power Rating during any operating period of 250 hours. Total operating time at 100 percent Prime Power shall not exceed 500 hours per year.

A 10 percent overload capability is available for a period of one hour within a twelve hour period of operation. Total operating time at the 10 percent overload power shall not exceed 25 hours per year.

Limited Time Running Prime Power Rating

Engines of this rating are available for a limited number of hours in a non-variable load application. It is intended for use in situations where power outages are contracted, such as in utility power curtailment. Engines may be operated in parallel to the public utility up to 750 hours per year at power levels never to exceed the Prime Power rating.

Limited Time Running Prime Power ratings differ from Unlimited Time Running in that even though the maximum power output of the engines are the same, the Limited Time Running allows the Engine to be parallel to Public Utility and run at the full Prime Power rating and must never exceed the Prime Power rating.

Continuous/Base Power Rating

Engines with this rating are available for supplying utility power at a constant 100 percent load for an unlimited number of hours per year. No overload capability is available for this rating.

Continuous/Base Power ratings differ from Unlimited Time Running Prime Power ratings in that the Continuous/Base Load ratings are significantly reduced from the Prime Power ratings. Continuous/Base Load ratings have no load factor or application restrictions.

Coverage

Base Engine Warranty

This warranty covers any failures of the Engine, under normal use and service, which result from a defect in material or workmanship (Warrantable Failure).

Coverage begins with the sale of the Engine by Cummins and continues for the Duration stated below. The Duration commences either on the date of delivery of the Engine to the first user, or on the date the Engine is first leased, rented or loaned, or when the Engine has been operated for 50 hours, whichever occurs first.

Base Engine Warranty

	Duration Whichever Occurs First	
Rating	**Months**	**Hours**
Standby Power	24	400
Unlimited Prime Power	12	Unlimited
Limited Prime Power	12	750
Continuous/Base Power	12	Unlimited

Extended Major Components Warranty

The Extended Major Components Warranty applies to Engines other than B and C series and covers Warrantable Failures of the Engine cylinder block, camshaft, crankshaft and connecting rods (Covered Parts). Bushing and bearing failures are not covered. This coverage begins with the expiration of the Base Engine Warranty and continues for the Duration stated below. The Duration commences either on the date of delivery of the Engine to the first user, or on the date the Engine is first leased, rented or loaned, or when the Engine has been operated for 50 hours, whichever occurs first.

Extended Major Components Warranty

	Duration Whichever Occurs First	
Rating	**Months**	**Hours**
Standby Power	36	600
Unlimited Prime Power	36	10,000
Limited Prime Power	36	2,250
Continuous/Base Power	36	10,000

Consumer Products

This warranty on Consumer Products in the United States is a LIMITED warranty. **CUMMINS IS NOT RESPONSIBLE FOR INCIDENTAL OR CONSEQUENTIAL DAMAGES.** Any implied warranties applicable to Consumer Products terminate concurrently with the expiration of the express warranties applicable to the product. In the United States, some states do not allow the exclusion of incidental or consequential damages, or limitations on how long an implied warranty lasts, so the above limitations or exclusions may not apply to you.

These warranties are made to all Owners in the chain of distribution, and Coverage continues to all subsequent Owners until the end of the periods of Coverage.

Cummins Responsibilities

During Base Engine Warranty

Cummins will pay for all parts and labor needed to repair the damage to the Engine resulting from a Warrantable Failure. when performed during normal business hours. All labor costs will be paid in accordance with Cummins published Standard Repair Time guidelines.

Cummins will pay for the lubricating oil, antifreeze, filter elements, and other maintenance items that are not reusable due to the Warrantable Failure.

Cummins will pay reasonable travel expenses for mechanics to travel to and from the Engine site, including meals, mileage, and lodging when the repair is performed at the site of the failure.

Cummins will pay reasonable labor costs for Engine removal and reinstallation when necessary to repair a Warrantable Failure.

During the Extended Major Components Warranty

Cummins will pay for the repair or, at its option, replacement of the defective Covered Part and any Covered Part damaged by a Warrantable Failure of the defective Covered Part.

Owner's Responsibilities

During the Base Engine Warranty

Owner is responsible for the cost of lubricating oil, antifreeze, filter elements and other maintenance items replaced during warranty repairs unless such items are not reusable due to the Warrantable Failure.

During the Extended Major Components Warranty

Owner is responsible for the cost of all labor needed to repair the Engine, including the labor cost for Engine removal and reinstallation. When Cummins elects to repair a part instead of replacing it, the Owner is not responsible for the labor needed to repair the part.

Owner is responsible for the cost of all parts required for the repair except for the defective Covered Part and any Covered Part damaged by a Warrantable Failure of the defective Covered Part.

Owner is responsible for the cost of lubricating oil, antifreeze, filter elements and other maintenance items replaced during repair of a Warrantable Failure.

During the Base Engine and Extended Major Components Warranties

Owner is responsible for the operation and maintenance of the Engine as specified in the applicable Cummins Operation and Maintenance Manual. Owner is also responsible for providing proof that all recommended maintenance has been performed.

Before the expiration of the applicable warranty, Owner must notify a Cummins distributor, authorized dealer or other repair location approved by Cummins of any Warrantable Failure and make the Engine available for repair by such facility. Locations in the United States and Canada are listed in the Cummins United States and Canada Sales and Service Directory; other locations are listed in the Cummins International Sales and Service Directory.

Owner is responsible for communication expenses, meals, lodging and similar costs incurred as a result of a Warrantable Failure.

Owner is responsible for non-Engine repairs, "downtime" expenses, fines, all applicable taxes, all business costs and other losses resulting from a Warrantable Failure.

Owner is responsible for providing sufficient access to and reasonable ability to remove the Engine from the installation in the event of a Warrantable Failure.

Owner is responsible for maintaining an operating Engine hourmeter. If the hourmeter is not operational, engine usage will be estimated at 400 hours per month.

Limitations

Cummins is not responsible for failures or damage resulting from what Cummins determines to be abuse or neglect, including, but not limited to: operation without adequate coolants or lubricants; overfueling; overspeeding; lack of maintenance of lubricating, cooling or intake systems; improper storage, starting, warm-up, run-in or shutdown practices; unauthorized modifications to the Engine. Cummins is also not responsible for Engine performance problems or failures caused by incorrect oil or fuel, or by water, dirt or other contaminants in the fuel or oil.

This warranty does not apply to accessories supplied by Cummins which bear the name of another company. This category includes, but is not limited to: alternators, starters, fans, air conditioning compressors, clutches, filters, transmissions, air cleaners and safety shutdown switches.

Before a claim for excessive oil consumption will be considered, Owner must submit adequate documentation to show that consumption exceeds Cummins published standards.

Failure of belts and hoses supplied by Cummins are not covered beyond the first 500 hours or one year of operation, whichever occurs first after the warranty start date.

Parts used to repair a Warrantable Failure may be new Cummins parts, Cummins approved rebuilt parts, or repaired parts. Cummins is not responsible for failures resulting from the use of parts not approved by Cummins.

A new Cummins or Cummins-approved rebuilt part used to repair a Warrantable Failure assumes the identity of the part it replaced and is entitled to the remaining coverage hereunder.

Cummins is not responsible for Engine performance problems or failures resulting from:

1. Use or application of the Engine inconsistent with its rating designation as set forth above.
2. Inadequate or incorrect installations deviating from Cummins Generator Drive Installation Guidelines.

CUMMINS IS NOT RESPONSIBLE FOR WEAR OR WEAROUT OF COVERED PARTS.

CUMMINS IS NOT RESPONSIBLE FOR INCIDENTAL OR CONSEQUENTIAL DAMAGES.

THE WARRANTIES SET FORTH HEREIN ARE THE SOLE WARRANTIES MADE BY CUMMINS IN REGARD TO THESE ENGINES. CUMMINS MAKES NO OTHER WARRANTIES, EXPRESS OR IMPLIED, OR OF MERCHANTABILITY OR FITNESS FOR A PARTICULAR PURPOSE.

In the United States* and Canada, this warranty gives you specific legal rights, and you may also have other rights which vary from state to state.

Outside the United States* and Canada, in case of consumer sales, in some countries, the Owner has statutory rights which cannot be affected or limited by the terms of this warranty.

Nothing in this warranty excludes or restricts any contractual rights the owner may have against third parties.

*United States includes American Samoa, the Commonwealth of Northern Mariana Islands, Guam, Puerto Rico, and the U.S. Virgin Islands.

Worldwide Mobile Farming Equipment

Coverage

PRODUCTS WARRANTED

This warranty applies to new Engines sold by Cummins Engine Company, Inc., hereinafter 'Cummins', and delivered to the first user on or after February 1, 1993, that are used in industrial (off-highway) applications in the United States* and Canada, except for Engines used in marine, generator drive and certain defense applications, for which different warranty coverage is provided.

BASE ENGINE WARRANTY

This warranty covers any failures of the Engine, under normal use and service, which result from a defect in material or workmanship (Warrantable Failure).

Coverage begins with the sale of the Engine by Cummins. Coverage continues for two years or 2,000 hours of operation, whichever occurs first, from the date of delivery of the Engine to the first user, or from the date the unit is first leased, rented or loaned, or when the Engine has been operated for 50 hours, whichever occurs first. If the 2,000 hour limit is exceeded during the first year, coverage continues until the end of the first year.

EXTENDED MAJOR COMPONENTS WARRANTY

The Extended Major Components Warranty covers Warrantable Failures of the Engine cylinder block, camshaft, crankshaft and connecting rods (Covered Parts).

Bushing and bearing failures are not covered.

This coverage begins with the expiration of the Base Engine Warranty and ends after three years or 10,000 hours of operation, from the date of delivery of the Engine to the first user, or from the date the unit is first leased, rented or loaned, or from when the Engine has been operated for 50 hours, whichever occurs first.

CONSUMER PRODUCTS

The warranty on Consumer Products in the United States is a LIMITED warranty. **CUMMINS IS NOT RESPONSIBLE FOR INCIDENTAL OR CONSEQUENTIAL DAMAGES.** Any implied warranties applicable to Consumer Products in the United States terminate concurrently with the expiration of the express warranties applicable to the product. In the United States, some states do not allow the exclusion of incidental or consequential damages, or limitations on how long an implied warranty lasts, so the above limitations or exclusions may not apply to you.

These warranties are made to all Owners in the chain of distribution, and Coverage continues to all subsequent Owners until the end of the periods of Coverage.

Cummins Responsibilities

DURING THE BASE ENGINE WARRANTY

Cummins will pay for all parts and labor needed to repair the damage to the Engine resulting from a Warrantable Failure.

Cummins will pay for the lubricating oil, antifreeze, filter elements, and other maintenance items that are not reusable due to the Warrantable Failure.

Cummins will pay reasonable costs for mechanics to travel to and from the equipment site, including meals, mileage and lodging, when the repair is performed at the site of the failure.

Cummins will pay reasonable labor costs for Engine removal and reinstallation when necessary to repair a Warrantable Failure.

DURING THE EXTENDED MAJOR COMPONENTS WARRANTY

Cummins will pay for the repair or, at its option, replacement of the defective Covered Part and any Covered Part damaged by a Warrantable Failure of the defective Covered part.

Owners Responsibilities

DURING THE BASE ENGINE WARRANTY

Owner is responsible for the cost of lubricating oil, antifreeze, filter elements and other maintenance items provided during warranty repairs unless such items are not reusable due to the Warrantable Failure.

DURING THE EXTENDED MAJOR COMPONENTS WARRANTY

Owner is responsible for the cost of all labor needed to repair the Engine, including the labor to remove and reinstall the Engine. When Cummins elects to repair a part instead of replacing it, Owner is not responsible for the labor needed to repair the part.

Owner is responsible for the cost of all parts required for the repair except for the defective Covered Part and any Covered Part damaged by a Warrantable Failure of the defective Covered Part.

Owner is responsible for the cost of lubricating oil, antifreeze, filter elements and other maintenance items replaced during repair of a Warrantable Failure.

DURING THE BASE ENGINE AND EXTENDED MAJOR COMPONENTS WARRANTIES

Owner is responsible for the operation and maintenance of the Engine as specified in the applicable Cummins Operation and Maintenance Manual. Owner is also responsible for providing proof that all recommended maintenance has been performed.

Before the expiration of the applicable warranty, Owner must notify a Cummins distributor, authorized dealer or other repair location approved by Cummins of any Warrantable Failure and make the Engine available for repair by such facility. Locations in the United States and Canada are listed in the Cummins Off Highway Authorized Dealer Directory.

Owner is responsible for communication expenses, meals, lodging and similar costs incurred as a result of a Warrantable Failure.

Owner is responsible for non-Engine repairs, "downtime" expenses, cargo damage, fines, all applicable taxes, all business costs and other losses resulting from a Warrantable Failure.

Limitations

Cummins is not responsible for failures or damage resulting from what Cummins determines to be abuse or neglect, including, but not limited to: operation without adequate coolants or lubricants; overfueling; overspeeding; lack of maintenance of lubricating, cooling or intake systems; improper storage, starting, warm-up, run-in or shutdown practices; unauthorized modifications of the Engine. Cummins is also not responsible for failures caused by incorrect oil or fuel or by water, dirt or other contaminants in the fuel or oil.

For power units and fire pumps (package units), this warranty applies to accessories, except for clutches and filters, supplied by Cummins which bear the name of another company.

Except for power units and fire pumps, this warranty does not apply to accessories which bear the name of another company. This category includes, but is not limited to: alternators, starters, fans, air conditioning compressors, clutches, filters, transmissions, torque converters, steering pumps, and non-Cummins fan drives, engine compression brakes and air compressors.

Cummins Compusave units are covered by a separate warranty.

Before a claim for excessive oil consumption will be considered, Owner must submit adequate documentation to show that consumption exceeds Cummins published standards.

Failures of belts and hoses supplied by Cummins are not covered beyond the first 500 hours or one year of operation, whichever occurs first.

Parts used to repair a Warrantable Failure may be new Cummins parts, Cummins approved rebuilt parts, or repaired parts. Cummins is not responsible for failures resulting from the use of parts not approved by Cummins.

A new Cummins or Cummins-approved rebuilt part used to repair a Warrantable Failure assumes the identity of the part it replaced and is entitled to the remaining coverage hereunder.

CUMMINS DOES NOT COVER WEAR OR WEAROUT OF COVERED PARTS.

CUMMINS IS NOT RESPONSIBLE FOR INCIDENTAL OR CONSEQUENTIAL DAMAGES.

THESE WARRANTIES SET FORTH HEREIN ARE THE SOLE WARRANTIES MADE BY CUMMINS IN REGARD TO THESE ENGINES. CUMMINS MAKES NO OTHER WARRANTIES, EXPRESS OR IMPLIED, OR OF MERCHANTABILITY OR FITNESS FOR A PARTICULAR PURPOSE.

This warranty gives you specific legal rights, and you may also have other rights which vary from state to state.

* United States includes American Samoa, the Commonwealth of Northern Mariana Islands, Guam, Puerto Rico and the U.S. Virgin Islands.

International Industrial

Coverage

PRODUCTS WARRANTED

This warranty applies to new Engines sold by Cummins Engine Company, Inc., hereinafter 'Cummins', and delivered to the first user on or after February 1, 1993, that are used in industrial (off-highway) applications anywhere in the world where Cummins-approved service is available, except the United States* and Canada. Different warranty coverage is provided for Engines used in marine, generator drive and certain defense applications.

BASE ENGINE WARRANTY

This warranty covers any failures of the Engine, under normal use and service, which result from a defect in material or workmanship (Warrantable Failure).

Coverage begins with the sale of the Engine by Cummins. Coverage continues for two years or 2,000 hours of operation, whichever occurs first, from the date of delivery of the Engine to the first user, or from the date the unit is first leased, rented or loaned, or when the Engine has been operated for 50 hours, whichever occurs first. If the 2,000 hour limit is exceeded during the first year, coverage continues until the end of the first year.

EXTENDED MAJOR COMPONENTS WARRANTY

The Extended Major Components Warranty covers Warrantable Failures of the Engine cylinder block, camshaft, crankshaft and connecting rods (Covered Parts).

Bushing and bearing failures are not covered.

This coverage begins with the expiration of the Base Engine Warranty and ends three years or 10,000 hours of operation, after the date of delivery of the Engine to the first user, or from the date the unit is first leased, rented or loaned, or from when the Engine has been operated for 50 hours, whichever occurs first.

These warranties are made to all Owners in the chain of distribution, and Coverage continues to all subsequent Owners until the end of the periods of Coverage.

Cummins Responsibilities

DURING THE BASE ENGINE WARRANTY

Cummins will pay for all parts and labor needed to repair the damage to the Engine resulting from a Warrantable Failure.

Cummins will pay for the lubricating oil, antifreeze, filter elements, and other maintenance items that are not reusable due to a Warrantable Failure.

Cummins will pay reasonable costs for mechanics to travel to and from the equipment site, including meals, mileage and lodging, when the repair is performed at the site of the failure.

Cummins will pay reasonable labor costs for Engine removal and reinstallation when necessary to repair a Warrantable Failure.

DURING THE EXTENDED MAJOR COMPONENTS WARRANTY

Cummins will pay for the repair or, at its option, replacement of the defective Covered Part and any Covered Part damaged by a Warrantable Failure of the defective Covered part.

Owners Responsibilities

DURING THE BASE ENGINE WARRANTY

Owner is responsible for the cost of lubricating oil, antifreeze, filter elements and other maintenance items replaced during warranty repairs unless such items are not reusable due to the Warrantable Failure.

DURING THE EXTENDED MAJOR COMPONENTS WARRANTY

Owner is responsible for the cost of all labor needed to repair the Engine, including the labor to remove and reinstall the Engine. When Cummins elects to repair a part instead of replacing it, Owner is not responsible for the labor needed to repair the part.

Owner is responsible for the cost of all parts required for the repair except for the defective Covered Part and any Covered Part damaged by a Warrantable Failure of the defective Covered Part.

Owner is responsible for the cost of lubricating oil, antifreeze, filter elements and other maintenance items replaced during repair of a Warrantable Failure.

DURING THE BASE ENGINE AND EXTENDED MAJOR COMPONENTS WARRANTIES

Owner is responsible for the operation and maintenance of the Engine as specified in the applicable Cummins Operation and Maintenance Manual. Owner is also responsible for providing proof that all recommended maintenance has been performed.

Before the expiration of the applicable warranty, Owner must notify a Cummins distributor, authorized dealer or other repair location approved by Cummins of any Warrantable Failure and make the product available for repair by such facility. Locations are listed in the Cummins International Sales and Service Directory.

Owner is responsible for communication expenses, meals, lodging and similar costs incurred as a result of a Warrantable Failure.

Owner is responsible for non-Engine repairs, "downtime" expenses, cargo damage, fines, all applicable taxes, all business costs and other losses resulting from a Warrantable Failure.

Limitations

Cummins is not responsible for failures or damage resulting from what Cummins determines to be abuse or neglect, including, but not limited to: operation without adequate coolants or lubricants; overfueling; overspeeding; lack of maintenance of lubricating, cooling or intake systems; improper storage, starting, warm-up, run-in or shutdown practices; unauthorized modifications of the Engine. Cummins is also not responsible for failures caused by incorrect oil or fuel or by water, dirt or other contaminants in the fuel or oil.

With certain exceptions, this warranty does not apply to accessories supplied by Cummins which bear the name of another company. The exceptions to which this warranty does apply are:

1. Accessories, except for clutches and filters, supplied by Cummins as part of a fire pump or power unit (package units) are covered for the duration of Base Engine Warranty.
2. Starters, alternators, power steering pumps and non-Cummins air compressors supplied by Cummins on B or C Series Engines in applications other than fire pumps or power units are covered for six months.

Examples of accessories to which this warranty does not apply are: air conditioning compressors, clutches, air cleaners, fans, filters, transmissions and torque convertors.

Cummins Compusave units are covered by a separate warranty.

Before a claim for excessive oil consumption will be considered, Owner must submit adequate documentation to show that consumption exceeds Cummins published standards.

Failures of belts and hoses supplied by Cummins are not covered beyond the first 500 hours or one year of operation, whichever occurs first.

Parts used to repair a Warrantable Failure may be new Cummins parts, Cummins approved rebuilt parts, or repaired parts. Cummins is not responsible for failures resulting from the use of parts not approved by Cummins.

A new Cummins or Cummins-approved rebuilt part used to repair a Warrantable Failure assumes the identity of the part it replaced and is entitled to the remaining coverage hereunder.

CUMMINS DOES NOT COVER WEAR OR WEAROUT OF COVERED PARTS.

CUMMINS IS NOT RESPONSIBLE FOR INCIDENTAL OR CONSEQUENTIAL DAMAGES.

THESE WARRANTIES SET FORTH HEREIN ARE THE SOLE WARRANTIES MADE BY CUMMINS IN REGARD TO THESE ENGINES. CUMMINS MAKES NO OTHER WARRANTIES, EXPRESS OR IMPLIED, OR OF MERCHANTABILITY OR FITNESS FOR A PARTICULAR PURPOSE.

In case of consumer sales, in some countries, the Owner has statutory rights which cannot be affected or limited by the terms of this warranty.

Nothing in this warranty excludes or restricts any contractual rights the Owner may have against third parties.

* United States includes American Samoa, the Commonwealth of Northern Mariana Islands, Guam, Puerto Rico and the U.S. Virgin Islands.

Section L - Service Literature

Section Contents

Page

Publications Titles L-2
Section Contents L-1
Service Literature Ordering Location L-3
Service Publications Order Form L-4

Publications Titles

The following publications can be purchased by filling in and mailing the Service Literature Order Form:

Bulletin No.	Title of Publication
3379000	Air For Your Engine
3379001	Fuel For Cummins Engines
3379034	Publications and Training Aids Price List
3387251	Coolant Additives and Filtration
3387266	Cold Weather Operation
3810298	Troubleshooting and Repair Manual - NT855 Engines
3379076	NH/NT Shop Manual
3810242	Single Cylinder Air Compressor Shop Manual
3810257	Two Cylinder Air Compressor Shop Manual
3379091	Turbochargers Rebuild Manual
3810243	HC-5A Turbocharger Shop Manual

Service Literature Ordering Location

Region	Ordering Location
United States and Canada	Cummins Distributors or Cummins Engine Co., Inc. M/C 95030 Box 3005 Columbus, IN 47202-3005
U.K., Europe, Mid-East, Africa, and Eastern European Countries	Cummins Engine Co., Ltd. Royal Oak Way South Daventry Northants, NN11 5NU, England
South and Central America (excluding Brazil and Mexico)	Cummins Americas, Inc. 3450 Executive Way Miramar, FL 33025
Brazil and Mexico	Cummins Engine Co., Inc. International Parts Order Dept., MC 40931 Box 3005 Columbus, IN 47202-3005
Far East (excluding Australia and New Zealand)	Cummins Diesel Sales Corp. Literature Center 8 Tanjong Penjuru Jurong Industrial Estate Singapore 2260
Australia and New Zealand	Cummins Diesel Australia 2 Carribean Drive Scoresby Melbourne Victoria, Australia

Obtain current price information from your local Cummins Distributor or (for U.S.A. and Canada) by calling Cummins Toll Free Number 1-800-DIESELS (1-800-343-7357).

Literature Order Form

Use this form for prompt handling of your literature order.

Item	Bulletin Number	Title of Publication	Quantity	U.S. Price Each	Amount
1				$	$
2					
3					
4					
5					
6					
				Order Total	$

Contact your Cummins distributor for prices and availability.

For problems with literature orders, contact 1-800-DIESELS (1-800-343-7357) (for U.S.A. and Canada).

Prices subject to change without notice.

Please cut on dotted line

Literature Order Form

Use this form for prompt handling of your literature order.

Item	Bulletin Number	Title of Publication	Quantity	U.S. Price Each	Amount
1				$	$
2					
3					
4					
5					
6					
				Order Total	$

Contact your Cummins distributor for prices and availability.

For problems with literature orders, contact 1-800-DIESELS (1-800-343-7357) (for U.S.A. and Canada).

Prices subject to change without notice.

Mail the Literature Order Form along with your ship-to address to your nearest Cummins distributor.

FROM:

Name: _____

Street Address: _____

City: _____ State: _____ Zip Code: _____

Country: _____

SHIP TO: (Name and address where literature is to be shipped)

Name: _____

Street Address: _____

City: _____ State: _____ Zip Code: _____

Country: _____

Please cut on dotted line

Mail the Literature Order Form along with your ship-to address to your nearest Cummins distributor.

FROM:

Name: _____

Street Address: _____

City: _____ State: _____ Zip Code: _____

Country: _____

SHIP TO: (Name and address where literature is to be shipped)

Name: _____

Street Address: _____

City: _____ State: _____ Zip Code: _____

Country: _____

About the Manual i-2
Air Cleaner Element 4-2
Cartridge Type Element - Cleaning 4-5
Cleaning 4-2
Dual - Heavy Duty Dry-Type Element - Replacement 4-4
Replacement 4-3
Single - Heavy Duty Dry-Type Element 4-3
Air Cleaner Pre-Cleaner and Dust Pan 3-5
Checking/Cleaning 3-5
Air Compressor 8-19
Air Compressor Discharge-Inspection 8-19
Air Compressor Intake-Inspection 8-21
Inspection 8-19
Air Compressor Air Cleaner Element (Cummins Two-Cylinder Only) 5-10
Replacement 5-10
Replacement - Bendix-Westinghouse Paper Element 5-10
Replacement - Bendix-Westinghouse Sponge Element 5-10
Air Intake Hoses, Pipes, and Clamps 4-6
Inspection 4-6
Air Starting Motors A-2
Maintenance A-2
Air Tanks 4-6
Draining 4-6
Alternator Drive Belt A-6
Adjustment A-6
Batteries 7-4
Checking 7-4
Battery Connections A-2
Parallel and Series Connections A-2
Belt Tension 3-5
Checking ..... 3-5 , A-3
Belts 3-4
Inspection 3-4
Belts - General Inspection A-3
Big Cam III Coolant Flow (Cooling Loop) D-6
Capscrew Markings and Torque Values V-28
Capscrew Markings and Torque Values - U.S. Customary V-28
Cold Weather Engine Operation 1-2
Cold Weather Protection 1-5
Cold Weather Starting Aids 1-3
Electrically Operated Ether Valve 1-4
Ether Starting Aid 1-3
Installation Recommendations 1-4
Manually Operated Ether Valve 1-3
Cold Weather Starting Procedures 1-4
With Mechanical or Electrical Metering Equipment 1-5
Without Metering Equipment 1-4
Combustion Air System Flow Diagram D-7
Big Cam III Intake System D-7
Exhaust System D-7
Component Manufacturers' Addresses C-2
Air Compressors C-2
Air Cylinders C-2
Air Heaters C-2
Air Starting Motors C-2
Alternators C-2
Auxiliary Brakes C-2
Belts C-2
Catalytic Convertors C-2
Clutches C-2
Coolant Heaters C-2
Drive Plates C-2
Electric Starting Motors C-3
Engine Protection Controls C-3
Fan Clutches C-3
Fans C-3
Filters C-3
Flexplates C-3
Fuel Warmers C-3
Gauges C-3
Governors C-3
Heat Sleeves C-4
Hydraulic and Power Steering Pumps C-4
Oil Heaters C-4
Torque Converters C-4
Compressed Air System Flow Diagrams D-8
Coolant Additive Concentration 5-9
Checking 5-9
Coolant Filter 5-7
Replacement 5-7
Coolant Level 3-3
Checking 3-3
Coolant Recommendations/Specifications V-13
Cooling System Maintenance V-21
Cooling System Sealing Additives V-15
Cooling System Soluble Oils V-15
Fleetguard® DCA4 Service Filters and Liquid Pre-Charge V-18
Heavy Duty Coolant V-14
Supplemental Coolant Additives (SCA's) V-15
Test Intervals V-24
Cooling Fan 3-4
Inspection 3-4
Cooling System 8-14
Clean System and Replace Antifreeze/Water and DCA 8-14
Crankcase Breather 5-6
Cleaning and Checking 5-6
Crankshaft End Clearance 7-3
Checking 7-3
Crosshead Adjustment Procedure 6-17
Crossheads, Valves and Injectors - Adjustment - General Information 6-2
Definition of Terms i-9
Drive Belt Tension Chart V-27
Drive Belts A-6
Replacement A-6
Electrical System V-6
Batteries (Specific Gravity) V-7
Engine 7-2
Steam or Chemically Clean 7-2
Engine Identification E-2
Cummins Engine Nomenclature E-2
Engine Dataplate E-2
Fuel Pump Dataplate E-3
Engine Maintenance Schedule 2-3
Page References for Maintenance Instructions 2-4
Engine Mounting Bolts 7-3
Checking 7-3
Engine Operating Range 1-6
Engine Operation Report 3-2
Engine Shut-Down 1-6
Engine Operation Before Shutdown 1-6
External Engine Components E-8
Fan Drive Belt A-4
Adjustment A-4
Fan Hub (Belt Driven) 8-17
Inspection 8-17
Fuel Filter(s) 5-2
Replacement 5-2
Fuel Pump 8-2
Cleaning and Calibration 8-2
Cleaning and Inspection 8-3
Installation 8-4
Removal 8-2
Fuel Recommendations/Specifications V-7
Fuel Systems Flow Diagram D-3
Fuel-Water Separator 3-3
Drain 3-3
General Information 1-2
General Information 4-2
General Safety Instructions i-8
Important Safety Notice i-8
General Specifications E-4
Air Induction System E-6
Air Intake System V-4
Batteries (State of Charge) E-7
Compressed Air System V-5
Cooling System ..... E-6 , V-4
Electrical System E-7
Exhaust System E-6
Exhaust System V-4
Fuel System ..... E-7 , V-3

General Engine Data E-5
Lubricating Oil System ..... E-6 , V-3
Heat Exchanger Zinc Plugs (Marine Only) 7-4
Checking 7-4
Hoses 7-2
Checking and Replacement 7-2
How to Use the Manual i-2
Idler Pulley 8-18
Inspection 8-18
Illustrations i-7
Injector Adjustment Procedures 6-4
Injector Adjustment - Dial Indicator Method (For Non-Top Stop Injectors Only) 6-5
Injector Adjustment - Outer Base Circle Method (For NTTA-450 Engines) 6-15
Injector Adjustment - Top Stop Zero Lash Method (For Non-STC Engines) 6-9
Injector Adjustment - Top Stop Zero Lash Method (For STC Engines) 6-12
Injectors 8-5
Cleaning and Calibration 8-5
Injectors - Replacement 8-5
Installation - PTD 8-9
Installation - STC 8-11
Removal - PTD 8-5
Removal - STC 8-7
Inlet Air Restriction Indicators 4-2
Mechanical Indicator 4-2
Vacuum Indicator 4-2
International Industrial W-7
Lubricating Oil and Oil Filter 5-3
Changing 5-3
Lubricating Oil Filter Specifications 5-3
Lubricating Oil Recommendations/Specifications V-8
Arctic Operation V-9
Lubricating Oil Filter Specifications V-12
New Engine Break-In Oils V-9
Oil Change Interval V-10
Lubricating System Flow Diagram ..... D-4 , D-5
Miscellaneous 9-2
Normal Starting Procedures (Above 0°C [32°F]) 1-2
Oil Level 3-3
Checking 3-3
Operating the Engine 1-5
Power Takeoff With Variable Speed Control 1-7
Publications Titles L-2
Raw Water Inlet Screens (Marine Only) 4-6
Checking 4-6
Section Contents L-1
Service Assistance S-2
Distributors - International S-19
Distributors and Branches - Australia S-13
Distributors and Branches - Canada S-12
Distributors and Branches - New Zealand S-15
Distributors and Branches - United States S-5
Division and Regional Offices S-4
Emergency Service S-2
Problem Solving S-3
Regional Offices - International S-16
Routine Service S-2
Service Literature Ordering Location L-3
Starting Procedure - After Extended Shutdown or Engine Oil Change 1-5
Step Timing Control 1-7
Storage for Engines Out of Service A-7
Symbols i-3
Thermal Aids 7-2
Checking 7-2
To the Owner and Operator i-2
Tool Requirements 2-2
Troubleshooting Guide for the Operator T-2
Coolant Temperature Above Normal ..... T-11 , T-12
Coolant Temperature Below Normal T-13
Engine Cranks But Will Not Start (No Smoke From Exhaust) T-6
Engine Hard to Start or Will Not Start (Exhaust Smoke Present). T-5
Engine Power Output Low ..... T-15 , T-16
Engine Starts But Will Not Keep Running T-7
Engine Will Not Crank or Cranks Slowly (Air Starter) T-3
Engine Will Not Crank or Cranks Slowly (Electric Starter) T-4
Engine Will Not Reach Rated Speed When Loaded T-17
Engine Will Not Shut Off T-8
Exhaust Smoke Excessive Under Load T-14
Instructions T-2
Lubricating Oil Pressure Low T-9
Oil Filter Plugging - Low Oil Pressure Light On T-10
White Smoke or Rough Running At Idle (After Warmup Period). T-18
Turbocharger 8-18
Inspection 8-18
Turbocharger Axial and Radial Clearance 8-18
Turbocharger Mounting Nuts 7-5
Checking 7-5
Unusual Engine Noise 3-2
Checking 3-2
Valve Adjustment Procedure 6-18
Vibration Dampers 8-22
Rubber Vibration Dampers-Inspection 8-22
Viscous Vibration Dampers-Inspection 8-22
Water Pump 8-18
Inspection 8-18
Water Pump Belt - Adjustment (Inside Idler Pulley) A-5
Worldwide Industrial and Marine W-2
Worldwide Mobile Farming Equipment W-5

NOTES

NOTES

Cummins Customized Parts Catalog

Cummins is pleased to announce the availability of a parts catalog compiled specifically for you. Unlike the generic versions of parts catalogs that support general high volume parts content; Cummins Customized catalogs contain only the new factory parts that were used to build your engine.

The catalog cover, as well as the content, is customized with you in mind. You can use it in your shop, at your worksite, or as a coffee table book in your RV or boat. The cover contains your name, company name, address, and telephone number. Your name and engine model identification even appears on the catalog spine. Everybody will know that Cummins created a catalog specifically for you.

This new catalog was designed to provide you with the exact information you need to order parts for your engine. This will be valuable for customers that do not have easy access to the Cummins Electronic Parts Catalog or the Cummins Parts Microfilm System.

Additional Features of the Customized Catalog include:

- Engine Configuration Data
- Table of Contents
- Separate Option and Parts Indexes
- Service Kits (when applicable)
- ReCon Part Numbers (when applicable)

ORDERING THE CUSTOMIZED PARTS CATALOG

Ordering by Telephone:

North American customers can contact their Cummins Distributor or call Gannett Direct Marketing Services at 800-646-5609 and order by credit card. Outside North America order on-line or make an International call to Gannett at +-+-502-454-6660

Ordering On-Line

The Customized Parts Catalog can be ordered On-Line from the Cummins Powerstore by credit card. Contact the Powerstore at **WWW.POWERSTORE.CUMMINS.COM**

Contact GDMS or the CUMMINS POWERSTORE for the current price; Freight may be an additional expense.

Information we need to take your Customized Parts Catalog Order. This information drives the cover content of the CPC.

- Customer Name
- Street Address
- Company Name (optional)
- Telephone No.
- Credit Card No.
- Cummins Engine Serial Number (located on the engine data plate)

Unfortunately not all Cummins Engines can be supported by this parts catalog. Engines older than 1984 or newer than 3 months may not have the necessary parts information to compile a catalog. We will contact you if this occurs and explain why we are unable to fill your order.

Customized Parts Catalogs are produced specifically for a single customer. This means they are not returnable for a refund. If we make an error and your catalog is not useable, we will correct that error by sending you a new catalog.