# Operation and Maintenance Manual
# Automotive, Recreational Vehicle, Bus, and Industrial C Series Engines

**U.S.A., Canada, Australia, New Zealand, and Puerto Rico**

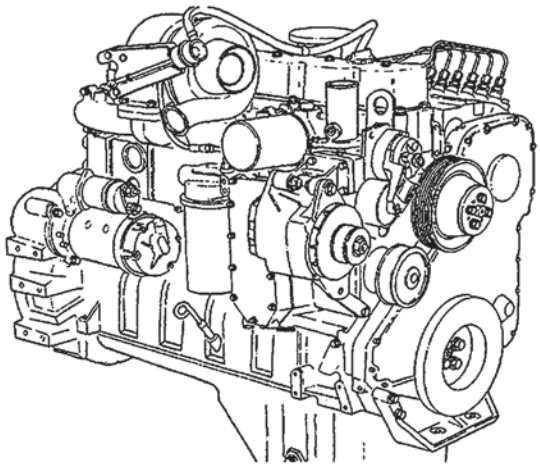

18900026

Copyright© 2000
Cummins Engine Company, Inc.
All rights reserved

Bulletin No. 3810248-12
Printed 03/00

# Foreword

This manual contains information for the correct operation and maintenance of your Cummins engine. It also includes important safety information, engine and systems specifications, troubleshooting guidelines, and listings of Cummins Authorized Repair Locations and component manufacturers.

**Read and follow all safety instructions. Refer to the WARNING in the General Safety Instructions in Section i - Introduction.**

Keep this manual with the equipment. If the equipment is traded or sold, give the manual to the new owner.

The information, specifications, and recommended maintenance guidelines in this manual are based on information in effect at the time of printing. Cummins Engine Company, Inc. reserves the right to make changes at any time without obligation. If you find differences between your engine and the information in this manual, contact your local Cummins Authorized Repair Location or call 1-800-DIESELS (1-800-343-7357) toll free in the U.S. and Canada.

The latest technology and the highest quality components were used to produce this engine. When replacement parts are needed, we recommend using only genuine Cummins or ReCon® exchange parts. These parts can be identified by the following trademarks:




**Note: Warranty information is located in Section W. Make sure you are familiar with the warranty or warranties applicable to your engine.**

# Table of Contents


| | Section |
|---|---|
| Introduction | i |
| Engine Identification | E |
| Operating Instructions | 1 |
| Maintenance Guidelines | 2 |
| Daily Maintenance Procedures | 3 |
| Maintenance Procedures at 10,000 Kilometers [6000 Miles], 250 Hours, or 3 Months | 4 |
| Maintenance Procedures at 19,000 Kilometers [12,000 Miles], 500 Hours, or 6 Months | 5 |
| Maintenance Procedures at 38,000 Kilometers [24,000 Miles], 1000 Hours, or 12 Months | 6 |
| Maintenance Procedures at 77,000 Kilometers [48,000 Miles], 2000 Hours, or 2 Years | 7 |
| Adjustment, Repair, and Replacement | A |
| System Diagrams | D |













Section


Service Literature ..... L

Component Manufacturers ..... M

Service Assistance ..... S

Troubleshooting ..... TS

Maintenance Specifications ..... V

Warranty ..... W

Index ..... X













# Important Reference Numbers

Fill in the part name and number in the blank spaces provided below. This will give you a reference whenever service or maintenance is required.

| Part Name | Part Number | Part Number |
|---|---|---|
| Engine Model | | |
| Engine Serial Number (ESN) | | |
| Control Parts List (CPL) | | |
| Fuel Pump Part Number | | |
| Electronic Control Module (ECM) | | |
| Electronic Control Module Serial Numbers (ECM) | | |
| Filter Part Numbers: | | |
| • Air Cleaner Element | | |
| • Lubricating Oil Filter | | |
| • Fuel | | |
| • Fuel-Water Separator | | |
| • Coolant | | |
| • Remote Gas | | |

(refno)

| Part Name | Part Number | Part Number |
|---|---|---|
| Governor Control Module (GCM) (if applicable) | | |
| Belt Part Numbers: | | |
| • | | |
| • | | |
| • | | |
| Clutch or Marine Gear (if applicable): | | |
| • Model | | |
| • Serial Number | | |
| • Part Number | | |
| • Oil Type | | |
| • Sea Water Pump | | |
| – Model | | |
| – Part Number | | |

# Section i - Introduction

## Section Contents

Page

**About the Manual** ..... i-2
General Information ..... i-2

**Acronyms and Abbreviations** ..... i-8
General Information ..... i-8

**General Safety Instructions** ..... i-6
Important Safety Notice ..... i-6

**How to Use the Manual** ..... i-3
General Information ..... i-3

**Illustrations** ..... i-5
General Information ..... i-5

**Symbols** ..... i-4
General Information ..... i-4

**To the Owner and Operator** ..... i-1
General Information ..... i-1

THIS PAGE LEFT INTENTIONALLY BLANK

# To the Owner and Operator

## General Information

Preventative maintenance is the easiest and least expensive type of maintenance. Follow the maintenance schedule recommendations outlined in Maintenance Guidelines (Section 2).

Keep records of regularly scheduled maintenance.

Use the correct fuel, oil, and coolant in your engine as specified in Engine Specifications (Section V).

Cummins Engine company, Inc. uses the latest technology and the highest quality components to produce its engines. Cummins recommends using **only** genuine Cummins parts and ReCon® exchange parts.

Personnel at Cummins Authorized Repair Locations have been trained to provide expert service and parts support. If you have a problem that can **not** be resolved by a Cummins Authorized Repair Location, follow the steps outlined in the Service Assistance (Section S).

# About the Manual

## General Information

This manual contains information needed to operate and maintain your engine correctly as recommended by Cummins Engine Company, Inc. Additional service literature (shop manual, troubleshooting and repair manual, etc.) can be ordered from a local Cummins Distributor. For problems with literature orders, contact (800) DIESELS, (800) 343-7357), for U.S.A. and Canada.

This manual does **not** cover vehicle or equipment maintenance procedures. Consult the vehicle or equipment manufacturer for specific maintenance recommendations.

Both metric and U.S. customary values are listed in this manual. The metric value is listed first, followed by the U.S. customary in brackets.

Numerous illustrations and symbols are used to aid in understanding the meaning of the text. Refer to Symbols (Section i) for a complete listing of symbols and their definitions.

Each section is preceded by a “Section Contents” to aid in locating information more quickly.

# How to Use the Manual

## General Information

This manual is organized according to intervals at which maintenance on your engine is to be performed. A maintenance chart (table) that states the required intervals and the checks to be made is located in Section 2. Locate the interval at which you are performing maintenance; then follow the steps given in that section for all the procedures to be performed. In addition, all the procedures done under previous maintenance intervals **must** be performed, also.

Keep a record of all the checks and inspections made. A record form for recording date, mileage/kilometer, or hours, and which maintenance checks were performed is located in Section 2.

Refer to Section TS for a guide to troubleshooting your engine. Follow the directions given in that section to locate and correct engine problems.

Refer to Section V for specifications recommended by Cummins Engine Company, Inc., for your engine. Specifications and torque values for each engine system are given in that section.

# Symbols

## General Information

The following symbols have been used in this manual to help communicate the intent of the instructions. When one of the symbols appears, it conveys the meaning defined below:



**WARNING** - Serious personal injury or extensive property damage can result if the warning instructions are **not** followed.



**CAUTION** - Minor personal injury can result or a part, an assembly, or the engine can be damaged if the caution instructions are **not** followed.



Indicates a **REMOVAL or DISASSEMBLY** step.



Indicates an **INSTALLATION or ASSEMBLY** step.



**INSPECTION** is required.



**CLEAN** the part or assembly.



**PERFORM** a mechanical or time **MEASUREMENT**.



**LUBRICATE** the part or assembly.



Indicates that a **WRENCH or TOOL SIZE** will be given.



**TIGHTEN** to a specific torque.



**PERFORM** an electrical **MEASUREMENT**.



Refer to another location in this manual or another publication for additional information.



The component weighs 23 kg [50 lb] or more. To avoid personal injury, use a hoist or get assistance to lift the component.

17800009

# Illustrations

## General Information

Some of the illustrations throughout this manual are generic and will **not** look exactly like the engine or parts used in your application. The illustrations can contain symbols to indicate an action required and an acceptable or **not** acceptable condition.

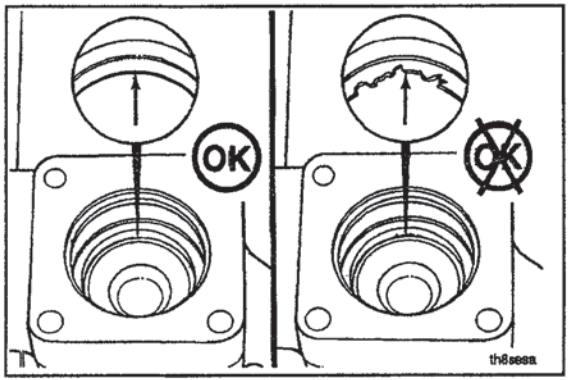


The illustrations are intended to show repair or replacement procedures. The procedure will be the same for all applications, although the illustration can differ.

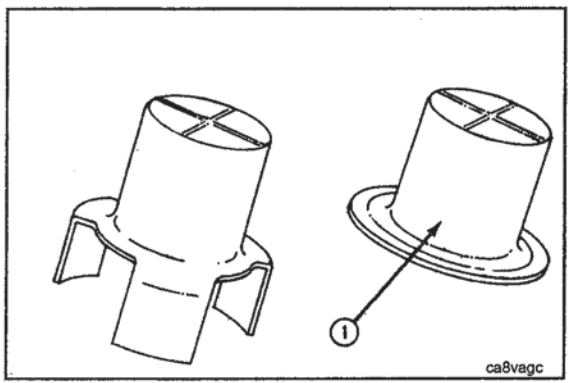

# General Safety Instructions

## Important Safety Notice

**⚠ WARNING ⚠**

**Improper practices or carelessness can cause burns, cuts, mutilation, asphyxiation or other bodily injury or death.**

Read and understand all of the safety precautions and warnings before performing any repair. This list contains the general safety precautions that **must** be followed to provide personal safety. Special safety precautions are included in the procedures when they apply.

- Make sure the work area surrounding the product is dry, well lit, ventilated, free from clutter, loose tools, parts, ignition sources and hazardous substances. Be aware of hazardous conditions that can exist.
- **Always** wear protective glasses and protective shoes when working.
- Rotating parts can cause cuts, mutilation or strangulation.
- Do **not** wear loose-fitting or torn clothing. Remove all jewelry when working.
- Disconnect the battery (negative [-] cable first) and discharge any capacitors before beginning any repair work. Disconnect the air starting motor if equipped to prevent accidental engine starting. Put a "Do **Not** Operate" tag in the operator's compartment or on the controls.
- Use ONLY the proper engine barring techniques for manually rotating the engine. Do **not** attempt to rotate the crankshaft by pulling or prying on the fan. This practice can cause serious personal injury, property damage, or damage to the fan blade(s) causing premature fan failure.
- If an engine has been operating and the coolant is hot, allow the engine to cool before you slowly loosen the filler cap and relieve the pressure from the cooling system.
- Do **not** work on anything that is supported ONLY by lifting jacks or a hoist. **Always** use blocks or proper stands to support the product before performing any service work.
- Relieve all pressure in the air, oil, fuel and the cooling systems before any lines, fittings, or related items are removed or disconnected. Be alert for possible pressure when disconnecting any device from a system that utilizes pressure. Do **not** check for pressure leaks with your hand. High pressure oil or fuel can cause personal

injury.

- To prevent suffocation and frostbite, wear protective clothing and ONLY disconnect fuel and liquid refrigerant (freon) lines in a well ventilated area. To protect the environment, liquid refrigerant systems **must** be properly emptied and filled using equipment that prevents the release of refrigerant gas (fluorocarbons) into the atmosphere. Federal law requires capturing and recycling refrigerant.
- To avoid personal injury, use a hoist or get assistance when lifting components that weigh 23 kg [50 lb] or more. Make sure all lifting devices such as chains, hooks, or slings are in good condition and are of the correct capacity. Make sure hooks are positioned correctly. **Always** use a spreader bar when necessary. The lifting hooks **must not** be side-loaded.
- Corrosion inhibitor, a component of SCA and lubricating oil, contains alkali. Do **not** get the substance in your eyes. Avoid prolonged or repeated contact with skin. Do **not** swallow internally. In case of contact, immediately wash skin with soap and water. In case of contact, immediately flood eyes with large amounts of water for a minimum of 15 minutes. IMMEDIATELY CALL A PHYSICIAN. KEEP OUT OF REACH OF CHILDREN.
- Naptha and Methyl Ethyl Ketone (MEK) are flammable materials and **must** be used with caution. Follow the manufacturer's instructions to provide complete safety when using these materials. KEEP OUT OF REACH OF CHILDREN.
- To avoid burns, be alert for hot parts on products that have just been turned off, and hot fluids in lines, tubes, and compartments.
- **Always** use tools that are in good condition. Make sure you understand how to use them before performing any service work. Use ONLY genuine Cummins or Cummins ReCon® replacement parts.
- **Always** use the same fastener part number (or equivalent) when replacing fasteners. Do **not** use a fastener of lesser quality if replacements are necessary.
- Do **not** perform any repair when fatigued or after consuming alcohol or drugs that can impair your functioning.
- Some state and federal agencies in the United States of America have determined that used engine oil can be carcinogenic and can cause reproductive toxicity. Avoid inhalation of vapors, ingestion, and prolonged contact with used engine oil.
- Coolant is toxic. If **not** reused, dispose of in accordance with local environmental regulations.

# Acronyms and Abbreviations

## General Information

The following list contains some of the acronyms and abbreviations used in this manual.

| | |
|---|---|
| **AFC** | Air Fuel Control |
| **API** | American Petroleum Institute |
| **ASA** | Air Signal Attenuator |
| **ASTM** | American Society of Testing and Materials |
| **°C** | Celsius |
| **CARB** | California Air Resources Board |
| **C.I.D.** | Cubic Inch Displacement |
| **CNG** | Compressed Natural Gas |
| **CPL** | Control Parts List |
| **cSt** | Centistokes |
| **ECM** | Electronic Control Module |
| **ECS** | Emission Control System |
| **EPA** | Environmental Protection Agency |
| **EPS** | Engine Position Sensor |
| **°F** | Fahrenheit |
| **GVW** | Gross Vehicle Weight |
| **Hg** | Mercury |
| **hp** | Horsepower |
| **$H_2O$** | Water |
| **ICM** | Ignition Control Module |
| **km/l** | Kilometers per Liter |
| **kPa** | Kilopascal |
| **LNG** | Liquid Natural Gas |
| **LTA** | Low Temperature Aftercooling |

| | |
|---|---|
| **MIP** | Mixer Inlet Pressure |
| **MPa** | Megapascal |
| **mph** | Miles Per Hour |
| **mpq** | Miles Per Quart |
| **N•m** | Newton-meter |
| **NG** | Natural Gas |
| **OEM** | Original Equipment Manufacturer |
| **ppm** | Parts Per Million |
| **psi** | Pounds Per Square Inch |
| **PTO** | Power Takeoff |
| **rpm** | Revolutions Per Minute |
| **SAE** | Society of Automotive Engineers |
| **SCA** | Supplemental Coolant Additive |
| **STC** | Step Timing Control |
| **VS** | Variable Speed |
| **VSS** | Vehicle Speed Sensor |

# NOTES

# Section E - Engine Identification

## Section Contents

Page

**Engine Diagrams** ..... E-11
Engine Views ..... E-11

**Engine Identification** ..... E-1
Cummins Engine Nomenclature ..... E-3
Engine Dataplate ..... E-1
Fuel Injection Pump Dataplate ..... E-4

**Specifications** ..... E-5
Air Intake System ..... E-9
Batteries (Specific Gravity) ..... E-10
Cooling System ..... E-8
Electrical System ..... E-10
Fuel System ..... E-6
General Specifications ..... E-5
Lubricating Oil System ..... E-6

THIS PAGE LEFT INTENTIONALLY BLANK

# Engine Identification

## Engine Dataplate

The engine dataplates show specific information about the engine. The engine serial number and control parts list (CPL) provide information for ordering parts and service needs.

**NOTE:** The engine dataplate **must not** be changed unless approved by Cummins Engine Company, Inc.

The dataplate is located on the topside of the gear housing. Have the following engine data available when communicating with a Cummins Authorized Repair Location. The information on the dataplate is mandatory when sourcing service parts.

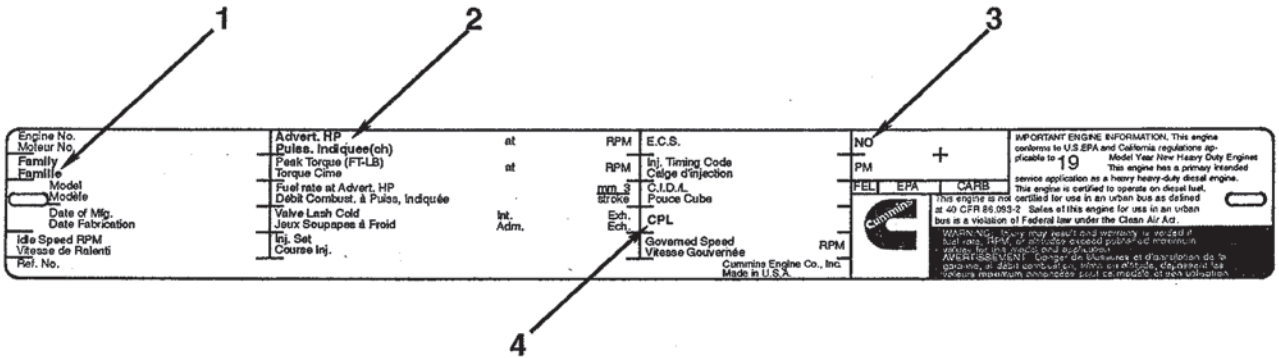


00d00047

1. Engine serial number
2. Control Parts List (CPL)
3. Model
4. Horsepower and rpm rating.

## Cummins Engine Nomenclature

### Automotive

The model name for engines in automotive and '96 industrial applications provides the data shown in the example:

**Example:** C8.3-275

275 = rated horsepower

8.3 = displacement in liters

C = engine series

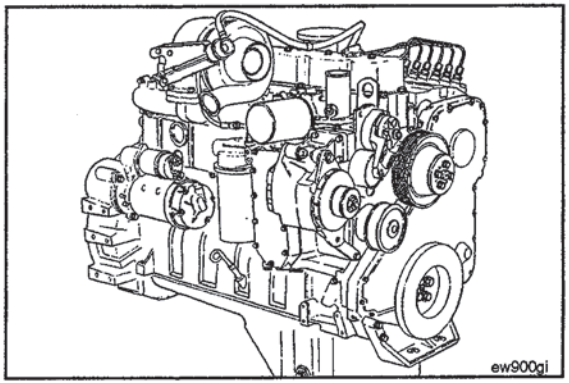


### Industrial

The following example shows a model name of an engine for pre-'96 industrial and nonautomotive applications:

**Example:** 6CTA8.3

8.3 = displacement in liters

A = aftercooled

T = turbocharged

C = engine series

6 = number of cylinders

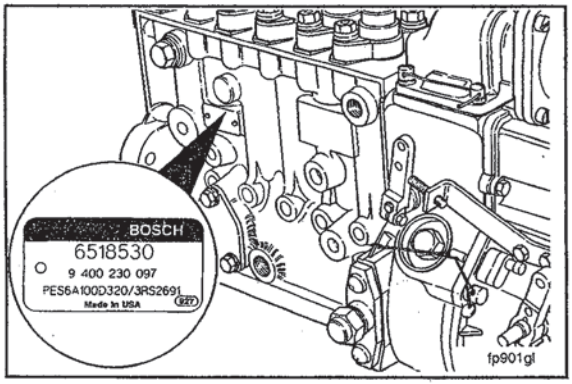


## Fuel Injection Pump Dataplate

The injection pump dataplate is located on the side of the injection pump. It provides information for fuel injection pump calibration.

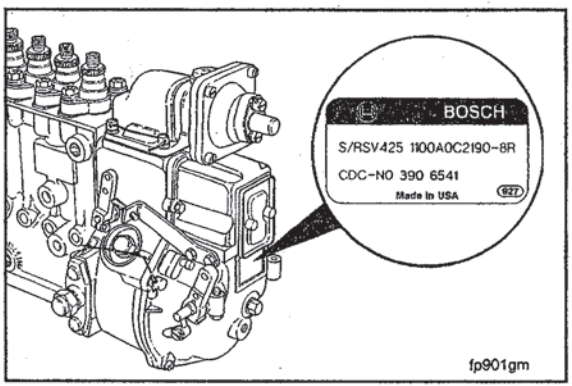


The Cummins part number for the fuel injection pump and governor combination is located on the governor dataplate.

# Specifications

## General Specifications

### General Engine Data (automotive)

| | 6C8.3 | 6CT8.3 | 6CTA8.3 | C8.3 |
|---|---|---|---|---|
| Bore | 114 mm [4.49 in] | 114 mm [4.49 in] | 114 mm [4.49 in] | 114 mm [4.49 in] |
| Stroke | 135 mm [5.32 in] | 135 mm [5.32 in] | 135 mm [5.32 in] | 135 mm [5.32 in] |
| Displacement | 8.27 liters [504.7 C.I.D.] | 8.27 liters [504.7 C.I.D.] | 8.27 liters [504.7 C.I.D.] | 8.27 liters [504.7 C.I.D.] |
| Engine Weight (dry) with Standard Accessories | 603 to 612 kg [1330 to 1350 lb] | 603 to 612 kg [1330 to 1350 lb] | 603 to 612 kg [1330 to 1350 lb] | 603 to 612 kg [1330 to 1350 lb] |
| Wet Weight | 635 to 658 kg [1400 to 1450 lb] | 635 to 658 kg [1400 to 1450 lb] | 635 to 658 kg [1400 to 1450 lb] | 635 to 658 kg [1400 to 1450 lb] |
| Firing Order | 1-5-3-6-2-4 | 1-5-3-6-2-4 | 1-5-3-6-2-4 | 1-5-3-6-2-4 |
| Valve Clearances: | | | | |
| Intake | 0.30 mm [0.012 in] | 0.30 mm [0.012 in] | 0.30 mm [0.012 in] | 0.30 mm [0.012 in] |
| Exhaust | 0.61 mm [0.024 in] | 0.61 mm [0.024 in] | 0.61 mm [0.024 in] | 0.61 mm [0.024 in] |
| Compression Ratio | 16.4:1 | 17.3:1 | 16.5:1 | 17.3:1*/18:1** |
| Rotation, Viewed from the Front of the Engine | **Clockwise** | **Clockwise** | **Clockwise** | **Clockwise** |

** **NOTE:** High Torque
* **NOTE:** Low Torque

## Fuel System

| Fuel System | 6C8.3 | 6CT8.3 | 6CTA8.3 | C8.3 |
|---|---|---|---|---|
| Maximum Fuel Filter Pressure Drop across Filters | 34 kPa [5 psi] | 34 kPa [5 psi] | 34 kPa [5 psi] | 34 kPa [5 psi] |
| Maximum Inlet Restriction to Fuel Transfer Pump | 100 mm Hg [4 in Hg] | 100 mm Hg [4 in Hg] | 100 mm Hg [4 in Hg] | 100 mm Hg [4 in Hg] |
| Maximum Allowable Return Line Restriction | 518 mm Hg [20.4 in Hg] | 518 mm Hg [20.4 in Hg] | 518 mm Hg [20.4 in Hg] | 518 mm Hg [20.4 in Hg] |

## Lubricating Oil System

Lubricating Oil Pressure at Idle (minimum allowable):

- 6C8.3 ..... 69 kPa [10 psi]
- 6CT8.3 ..... 69 kPa [10 psi]
- 6CTA8.3 ..... 69 kPa [10 psi]
- C8.3 ..... 69 kPa [10 psi]

Lubricating Oil Pressure at Rated (minimum allowable):

- 6C8.3 ..... 207 kPa [30 psi]
- 6CT8.3 ..... 207 kPa [30 psi]
- 6CTA8.3 ..... 207 kPa [30 psi]
- C8.3 ..... 207 kPa [30 psi]

Regulating Valve Opening Pressure:

- 6C8.3 ..... 518 kPa [75 psi]
- 6CT8.3 ..... 518 kPa [75 psi]
- 6CTA8.3 ..... 518 kPa [75 psi]
- C8.3 ..... 518 kPa [75 psi]

Differential Pressure to Open the Filter Bypass Valve:

| | |
|---|---|
| 6C8.3 | 172 kPa [25 psi] |
| 6CT8.3 | 172 kPa [25 psi] |
| 6CTA8.3 | 172 kPa [25 psi] |
| C8.3 | 172 kPa [25 psi] |

Lubricating Oil Capacity of Pan:

High:

| | |
|---|---|
| 6C8.3 | 18.9 liters [20 qt] |
| 6CT8.3 | 18.9 liters [20 qt] |
| 6CTA8.3 | 18.9 liters [20 qt] |
| C8.3 | 18.9 liters [20 qt] |

Low:

| | |
|---|---|
| 6C8.3 | 15.1 liters [16 qt] |
| 6CT8.3 | 15.1 liters [16 qt] |
| 6CTA8.3 | 15.1 liters [16 qt] |
| C8.3 | 15.1 liters [16 qt] |

## Cooling System

| Cooling System | 6C8.3 | 6CT8.3 | 6CTA8.3 | C8.3 |
|---|---|---|---|---|
| Coolant capacity (engine **only**) | 9.9 liters [10.5 qt] | 9.9 liters [10.5 qt] | 9.9 liters [10.5 qt] | 9.9 liters [10.5 qt] |
| Standard modulating thermostat | Start 81°C [178°F] Fully open 95°C [203°F] | Start 81°C [178°F] Fully open 95°C [203°F] | Start 81°C [178°F] Fully open 95°C [203°F] | Start 81°C [178°F] Fully open 95°C [203°F] |
| Pressure cap | 50 kPa [7 psi] | 50 kPa [7 psi] | 50 kPa [7 psi] | 50 kPa [7 psi] |
| Maximum allowable top tank temperature | 100°C [212°F] | 100°C [212°F] | 100°C [212°F] | 100°C [212°F] |
| Minimum recommended top tank temperature | 70°C [158°F] | 70°C [158°F] | 70°C [158°F] | 70°C [158°F] |

## Air Intake System

Intake Restriction:
- Maximum:
  - with Clean Air Filter ..... 254 mm $H_2O$ [10 in $H_2O$]
  - with Dirty Air Filter ..... 635 mm $H_2O$ [25 in $H_2O$]

Exhaust:
- Maximum without Catalyst Restriction ..... 76.2 mm Hg [3 in Hg]
- Maximum with Catalyst Restriction ..... 152 mm Hg [6 in Hg]

## Electrical System

### Minimum Recommended Battery Capacity

| Battery Size | Ambient Temperatures -18°C [0°F] | | 0°C [32°F] | |
|---|---|---|---|---|
| | Cold Cranking Amperes | Reserve Capacity[1] Amperes | Cold Cranking Amperes | Reserve Capacity[1] Amperes |
| 12 VDC | 1800 | 640 | 1280 | 480 |
| 24 VDC[2] | 900 | 320 | 640 | 240 |

1. The number of plates within a given battery size determines reserve capacity. Reserve capacity determines the duration of sustained cranking.
2. Per battery (two 12-VDC batteries in series) CCA ratings are based on -18°C [0°F].

## Batteries (Specific Gravity)

| Specific Gravity at 27°C [81°F] | State of Charge |
|---|---|
| 1.260 to 1.280 | 100% |
| 1.230 to 1.250 | 75% |
| 1.200 to 1.220 | 50% |
| 1.170 to 1.190 | 25% |
| 1.110 to 1.130 | Discharged |

# Engine Diagrams

## Engine Views

The illustrations that follow show the locations of the major external engine components, filters, and other service and maintenance points. Some external components will be at different locations for different engine models.

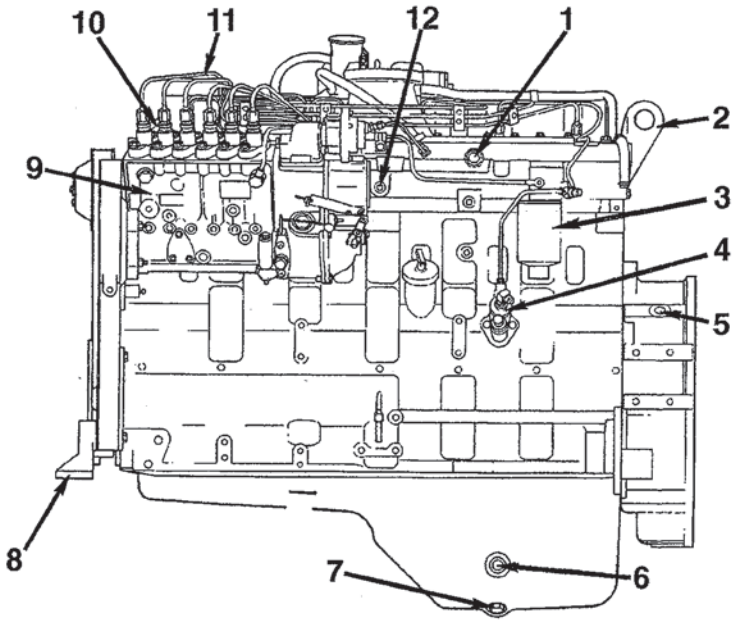


18900027

FUEL PUMP SIDE VIEW

1. M22 X 1.50 (air)
2. Rear lifting bracket
3. Fuel/water separator
4. Fuel transfer pump
5. 3/4 X 16-in UNF tap for magnetic pickup
6. Provision for oil pan sump heater
7. Lubricating oil drain plug
8. Front engine mounting bracket
9. Fuel injection pump
10. Distributor valve
11. High pressure fuel lines
12. 1/4-in NPTF (air).

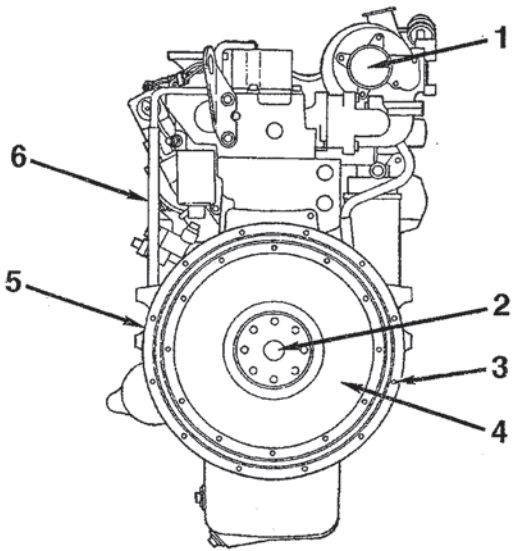


18900029

REAR VIEW

1. Turbocharger exhaust outlet
2. Pilot bearing bore
3. Flexplate mounting holes
4. Flywheel
5. Flywheel housing
6. Crankcase breather vent tube.

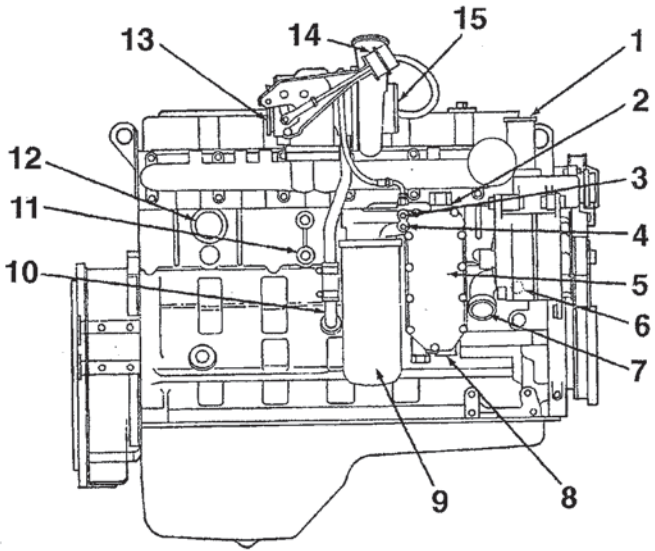


18900028

EXHAUST SIDE VIEW

1. Water outlet connection
2. Lubricating oil temperature thermostat
3. Lubricating oil pressure (after filter)
4. Lubricating oil pressure (before filter)
5. Lubricating oil cooler
6. 1/2-in NPTF (coolant)
7. Coolant inlet
8. Lubricating oil temperature sensor
9. Lubricating oil filter
10. Turbocharger oil drain
11. Provision for cab heater
12. Provision for coolant heater
13. Turbocharger exhaust outlet
14. Turbocharger wastegate actuator
15. Turbocharger air outlet.

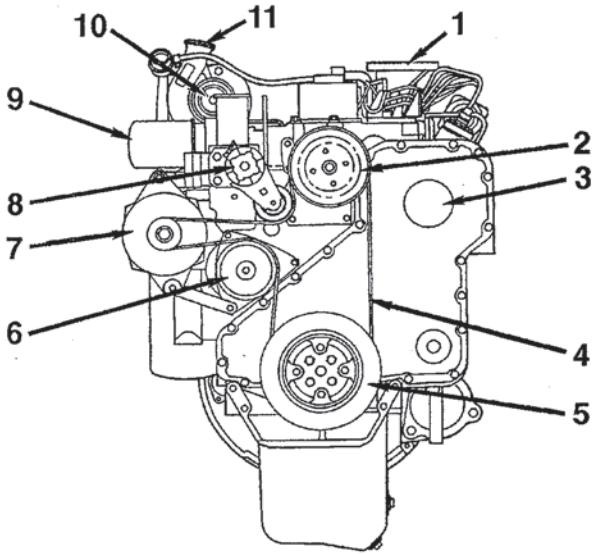


18900030

FRONT VIEW

1. Exhaust air inlet
2. Fan pulley
3. Fuel pump drive cover
4. Drive belt
5. Vibration damper
6. Water pump
7. Alternator
8. Belt tensioner
9. Coolant filter
10. Turbocharger air inlet
11. Turbocharger air outlet.

# NOTES

# Section 1 - Operating Instructions

## Section Contents

| | Page |
|---|---|
| **Cold Weather Operation** | 1-11 |
| Operating Aids | 1-11 |
| Shutters | 1-12 |
| Winterfronts | 1-12 |
| **Cold Weather Starting Aids** | 1-13 |
| Grid Heater | 1-16 |
| With Flame Start System | 1-15 |
| With Mechanical or Electrical Metering Equipment (Ether) | 1-13 |
| **Engine Operating Range** | 1-17 |
| General Information | 1-17 |
| **Engine Shutdown** | 1-22 |
| General Information | 1-22 |
| **Fuel Injection Pumps, In-Line** | 1-8 |
| General Information | 1-8 |
| **Normal Starting Procedure** | 1-3 |
| General Information | 1-3 |
| **Operating Instructions - Overview** | 1-1 |
| General Information | 1-1 |
| **Operating the Engine** | 1-20 |
| General Information | 1-20 |
| **Starting Procedure After Extended Shutdown or Oil Change** | 1-19 |

Page

General Information ..... 1-19

# Operating Instructions - Overview

## General Information

Proper care of the engine will result in longer life, better performance, and more economical operation.

Follow daily maintenance checks listed in Maintenance Guidelines, Section 2.

The Cummins engine associated with this manual does **not** require a "break-in" procedure. This manual provides all of the necessary information required for proper engine operation.

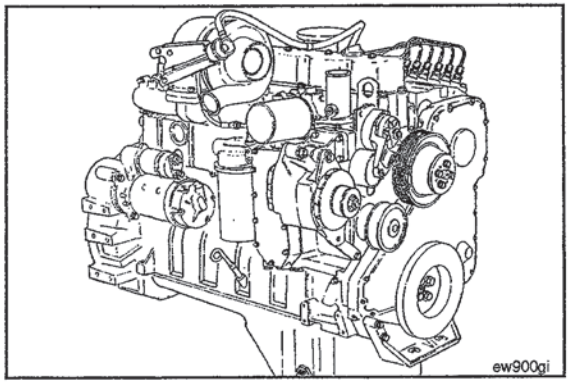


Check the oil pressure indicators, temperature indicators, warning lights, and other gauges daily to make sure they are operational.

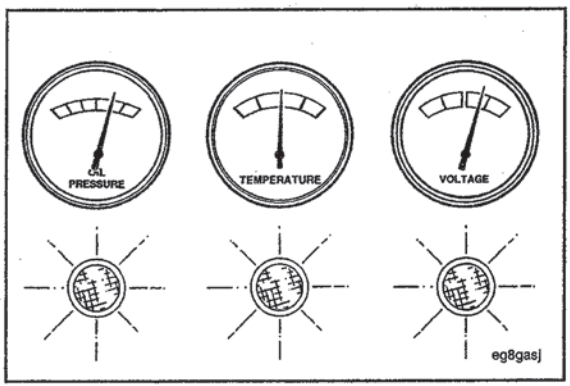

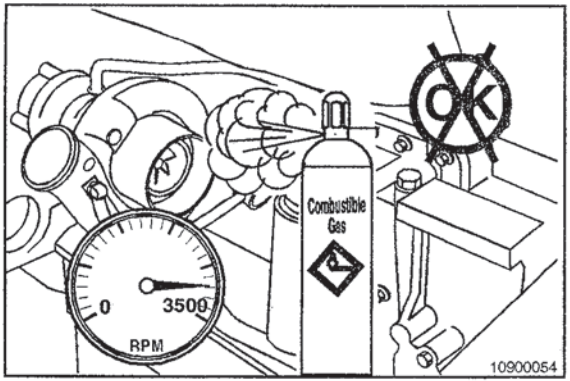




**⚠ WARNING ⚠**

**DO NOT OPERATE A DIESEL ENGINE WHERE THERE ARE OR CAN BE COMBUSTIBLE VAPORS. These vapors can be sucked through the air intake system and cause engine acceleration and overspeeding, which can result in a fire, an explosive, and extensive property damage. Numerous safety devices are available, such as air intake shutoff devices, to minimize the risk of overspeeding where an engine, due to its application, might operate in a combustible environment, such as due to a fuel spill or gas leak. Remember, Cummins has no way of knowing the use you have for your engine. THE EQUIPMENT OWNER AND OPERATOR ARE RESPONSIBLE FOR SAFE OPERATION IN A HOSTILE ENVIRONMENT. CONSULT YOUR CUMMINS AUTHORIZED REPAIR LOCATION FOR FUTHER INFORMATION.**

# Normal Starting Procedure

## General Information

### Starting Procedure Matrix

| Automotive/Industrial | Idle Throttle | Full Throttle |
|---|---|---|
| All pumps - above 16°C [60°F]. | X (after 5 sec, see Note) | |
| All pumps - below 16°C [60°F]. | | X (See Note) |

**NOTE:** Full throttle is applied **after** engaging the starter.

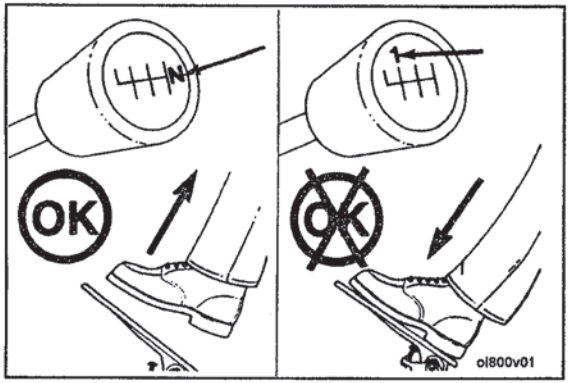


**⚠ CAUTION ⚠**

**To prevent damage to the starter, do not engage the starting motor more than 30 seconds. Wait 2 minutes between each attempt to start (electrical starting motors only).**

1. Disengage the drive unit, if equipped, and put the transmission in neutral.
2. With the throttle in the idle position, turn the key to the ON position, wait for the WAIT-TO-START lamp to go out, and then turn the key to the START position.
3. If the engine does **not** start after three attempts, check the fuel supply system. An absence of blue or white exhaust smoke during cranking indicates that no fuel is being delivered to the combustion chambers.

**⚠ CAUTION ⚠**

**The engine must have adequate oil pressure within 15 seconds after starting. If the WARNING lamp indicating low oil pressure has not gone out or there is no oil pressure indicated on the gauge within 15 seconds, shut off the engine immediately to avoid engine damage. Confirm the correct oil level in the oil pan.**

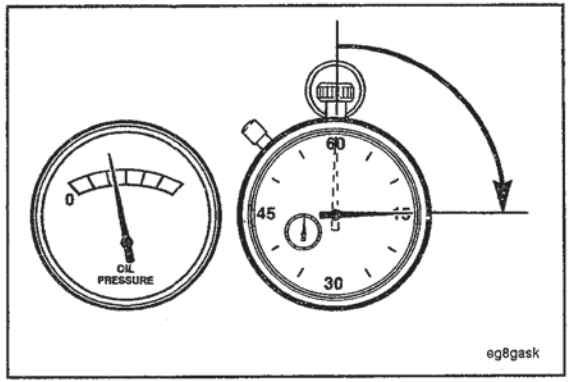


Idle the engine 3 to 5 minutes before operating with a load.

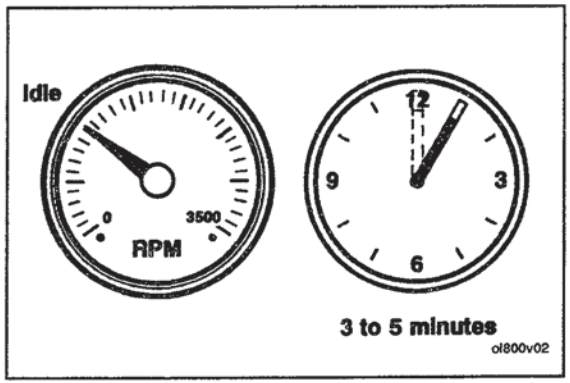

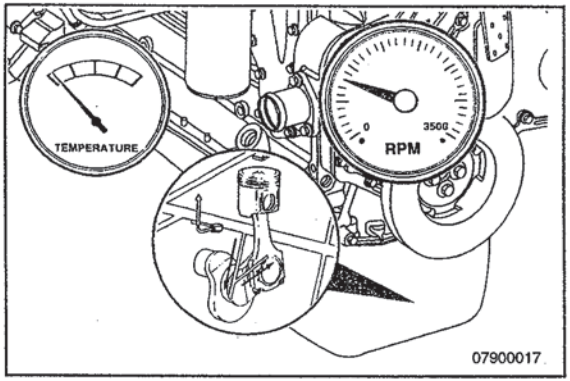


Increase the engine speed (rpm) slowly to provide adequate lubrication to the bearings and to allow the oil pressure to stabilize.

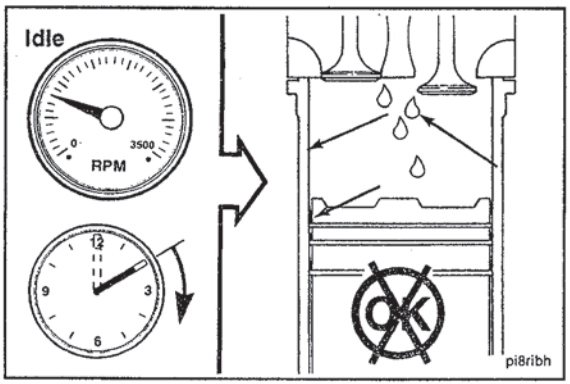


**⚠ CAUTION ⚠**

**Do not operate the engine at low idle for long periods. Long periods at low idle, more than 10 minutes, can damage an engine because combustion chamber temperatures will decrease and the fuel will not completely burn. This will cause carbon to build up around the injector spray holes and piston rings, which can cause the valves to stick. To avoid damage, operate the engine at higher idle.**

**⚠ WARNING ⚠**

**Always remove the ground or negative (-) battery cable before the positive (+) battery cable, and attach the positive (+) before the ground or negative (-) to avoid potentially damaging arcing.**

**⚠ CAUTION ⚠**

**To avoid damage to the C Series engine parts, do not connect jumper starting or battery charging cables to any C Series parts.**

**⚠ CAUTION ⚠**

**When using jumper cables to start the engine, make sure to connect the cables in parallel: Positive (+) to positive (+) and ground (-) to ground (-). When using an external electrical source to start the engine, turn the disconnect switch to the OFF position.**

The accompanying illustration shows a typical parallel battery connection. This arrangement, positive (+) to positive (+), doubles the cranking amperage.

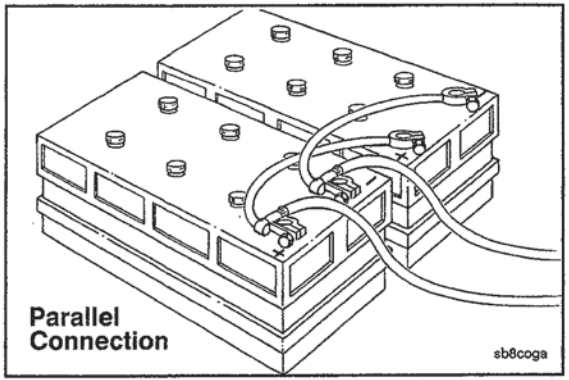

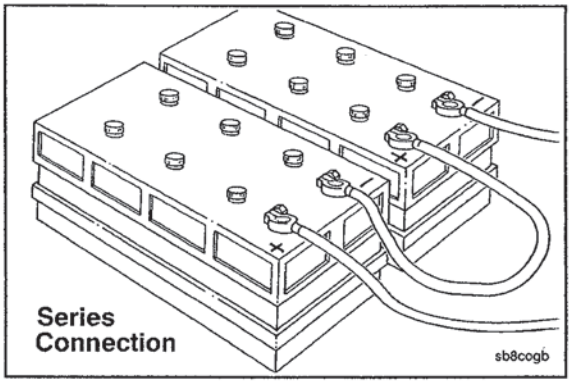


The accompanying illustration shows a typical series battery connection.

This arrangement, positive (+) to negative (-), doubles the voltage.

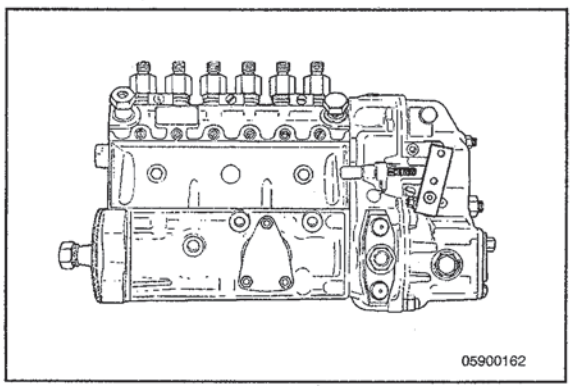


# Fuel Injection Pumps, In-Line

## General Information

### Bosch® In-Line Pump Identification

Use Bosch® A pump with RSV governor for an industrial application. The A pump will use the RQV governor for automotive engines. Some industrial engines will use RQV governors.

Use Bosch® MW pump with RQV governor for an automotive engine. The MW pump will use the RSV governor for industrial applications. Some industrial engines will use RQV governors.

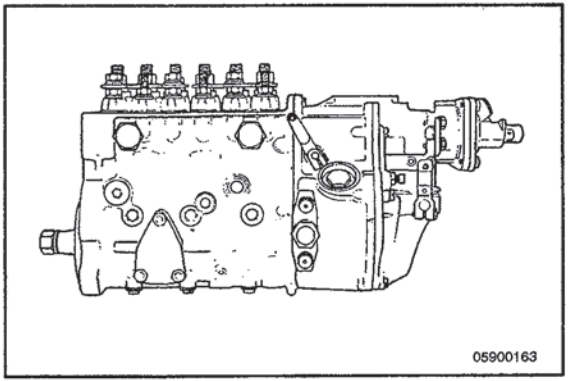


Shown here is the Bosch® P7100 pump with RQV-K governor for an automotive B or C Series engine.

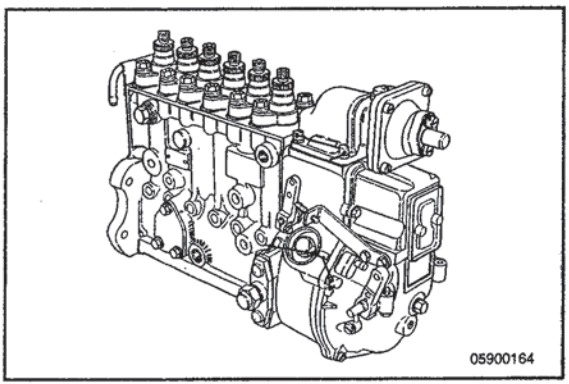

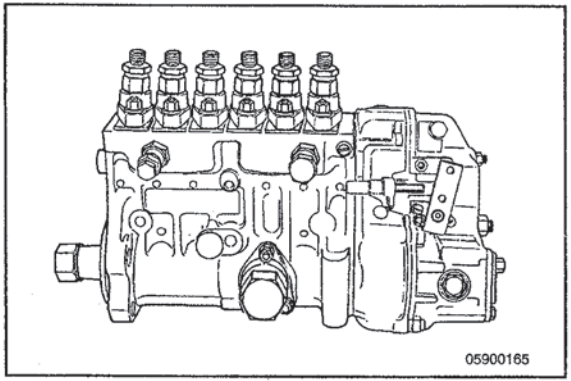


Shown here is the Nippondenso EP-9 pump with RSV governor for marine and some industrial C Series ratings.

# Cold Weather Operation

## Operating Aids

Use the following chart as a reference for required cold weather starting aids.

Operation in ambient temperatures below 0°C [32°F] will possibly require special consideration be given to engine starting.

At temperatures below 0°C [32°F], operate the engine at **moderate** speeds for 5 minutes before full loads are applied.

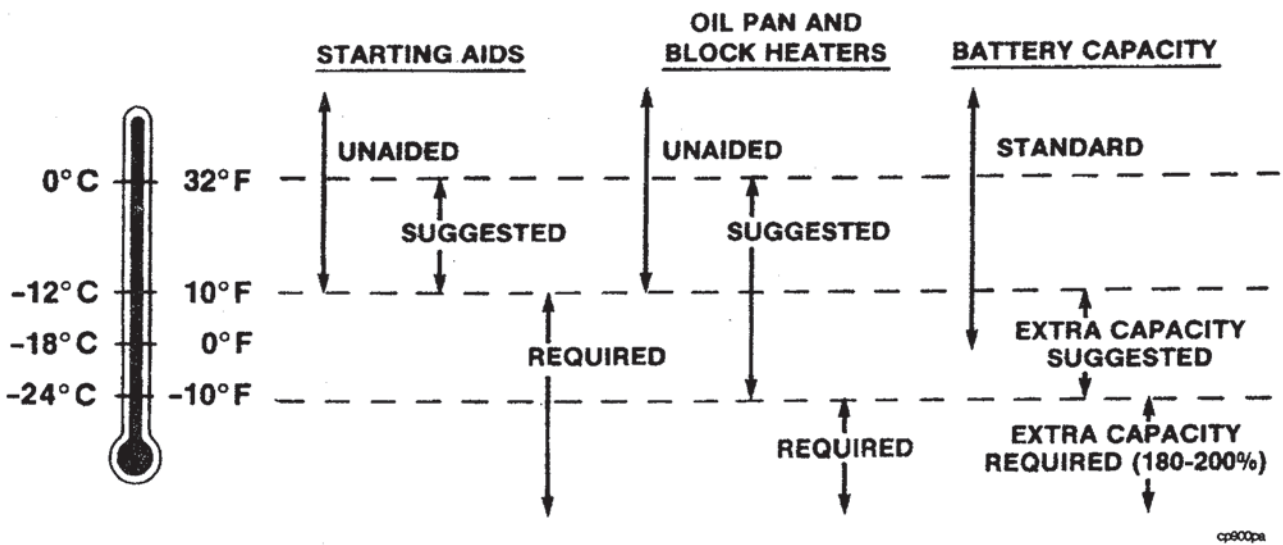

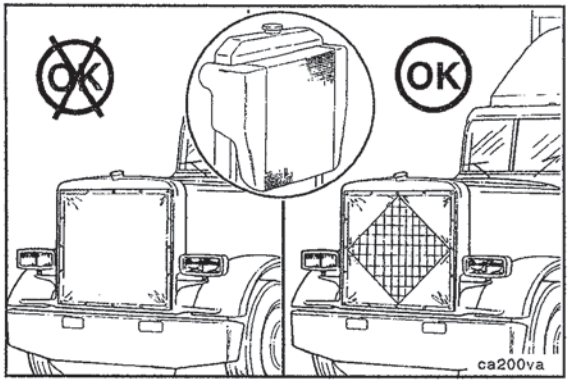


## Winterfronts

Winterfronts can be used on a vehicle equipped with a charge air cooler, but **must** be designed to partially cover the frontal area of the cooling system. A minimum of 77,419 $mm^2$ [120 $in^2$] (11 in x 11 in) of frontal area **must** be left open to airflow for the charge air cooler to function correctly.

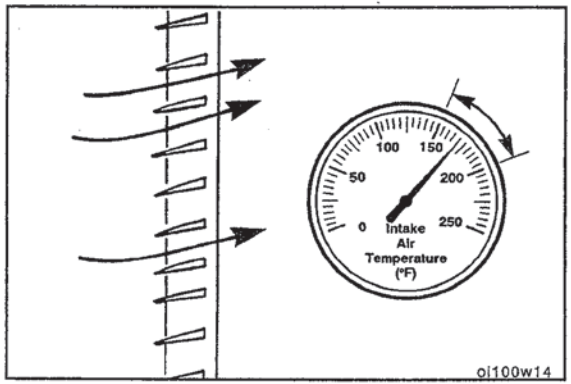


## Shutters

Installations of CAC engines with shutters also require an intake manifold air temperature switch to open the shutters at 66°C [150°F] to prevent excessive intake manifold temperatures. This prevents engine damage due to high intake manifold temperatures as a result of blocked airflow across the CAC.

# Cold Weather Starting Aids

## With Mechanical or Electrical Metering Equipment (Ether)

### Automotive/Industrial

If all pumps are above 16°C [60°F] take foot off the throttle. If engine does **not** start within 5 seconds of cranking, follow cold start procedures below.

If all pump are below 16°C [60°F], fully depress the throttle after engaging the starter. Full throttle on the VE pump makes sure there is sufficient start fuel delivery and helps keep the engine operating once started. The in-line pumps with RQV and RQV-K governors require full throttle to position and hold the rack in the start fuel position. The throttle **must** be depressed after engaging the starter to allow the shutoff lever to move to the run position before moving the throttle.

### Using Starting Fluid w

### ithout Metering Equipment

**⚠ WARNING ⚠**

**Never use starting fluid near an open flame, or with a preheater or flame thrower equipment. This combination can cause an explosion.**

**⚠ WARNING ⚠**

**Do not breathe starting fluid fumes. Starting fluid fumes can be harmful to your health.**

**⚠ CAUTION ⚠**

**Do not use excessive amounts of starting fluid when starting an engine. The use of too much starting fluid will cause engine damage.**

Spray starting fluid into the air cleaner intake while another person cranks the engine.

**⚠ WARNING ⚠**

**Because of the potential for an explosion, do not use volatile cold starting aids in underground mine or tunnel operations. Ask the local U.S. Bureau of Mines inspector for instructions.**

## With Flame Start System

The following flame start system is available on the C Series automotive engine **only** with either a 12-VDC or 24-VDC electrical system.

The flame start system burns a small amount of diesel fuel in the intake manifold to aid starting in cold ambient temperature conditions. The system also operates in a poststart mode to reduce white smoke.

The intake cold start control module monitors engine temperature. When the engine temperature is greater than 45°F, the flame start system will **not** be activated. Below 7°C [45°F], the system will operate as follows:

Preheat Cycle:

1. When the engine temperature is below 45°F, turn the ignition key to the RUN position. When the key is in this position, the WAIT-TO-START lamp will illuminate for approximately 25 seconds. The engine should **not** be cranked until the WAIT-TO-START lamp shuts off. If the engine is cranked before the preheat cycle is complete, the process is aborted. The controller is reset each time the ignition is turned off.

Engine Starting Cycle:

2. When the WAIT-TO-START lamp goes out, the preheat cycle is complete. Depress the accelerator pedal all the way to the floor and crank the engine. The engine **must** be cranked within 30 seconds. If the engine is **not** cranked within 30 seconds, the preheat cycle needs to be repeated (step 1).

Postheat Cycle:

3. Postheating occurs as the flame plugs continue to burn while the engine is running. Postheating helps warm the engine faster and eliminates white smoke. Postheating times are determined by the engine temperature upon start-up.

## Grid Heater

**⚠ WARNING ⚠**

**To avoid personal injury and property damage, never use starting fluid if the grid heater option is used. Starting fluid, that contains ether, can cause an explosion.**

For an industrial jacket-water-aftercooled C Series engine with a Bosch® in-line injection pump **only**, a grid heater is available that improves cold weather starting characteristics by heating the intake air during cranking. It can also serve to reduce white smoke if it is energized during cold ambient temperatures while the engine is at idle.

The electric grid heater operates in a preheat and postheat mode. The length of heater on-time is a function of the engine temperature. If the engine temperature is greater than 7°C [45°F], the electric grid air heater system will **not** be activated. Below 7°C [45°F], the system will operate as follows:

Engine Starting Cycle:

1. Turn the ignition key to the RUN position. When the key is in this position, the WAIT-TO-START lamp will be illuminated for approximately 25 seconds.

The engine should **not** be cranked until the WAIT-TO-START lamp shuts off.

**NOTE:** The controller is reset each time the ignition is turned off and the cycle will start over.

2. When the WAIT-TO-START lamp goes out, the preheat cycle is complete. Depress the accelerator pedal and crank the engine. The starter should be cranked as soon as the WAIT-TO-START lamp goes out.

Postheat Cycle:

3. Postheating occurs as the grid heater elements are cycled while the engine is running. Postheating helps warm the engine up faster and eliminates white smoke. Postheating is determined by the engine temperature upon start-up.

# Engine Operating Range

## General Information

**⚠ CAUTION ⚠**

**Do not operate the engine at excessive full-throttle operation below peak torque rpm for more than 30 seconds. This condition will shorten engine life to overhaul, can cause serious engine damage, and is considered driver abuse.**

Cummins engines are designed to operate successfully at full throttle under transient conditions down to peak torque engine speed. This is consistent with recommended operating practices.

Operation of the engine below peak torque rpm can occur during gear shifting due to the difference of ratios between transmission gears, but engine operation **must not** be sustained more than 30 seconds at full throttle below peak torque rpm.

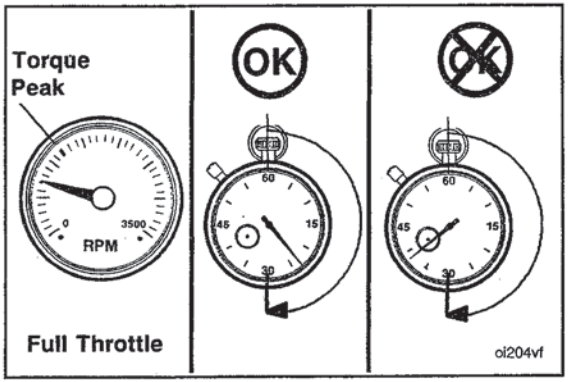


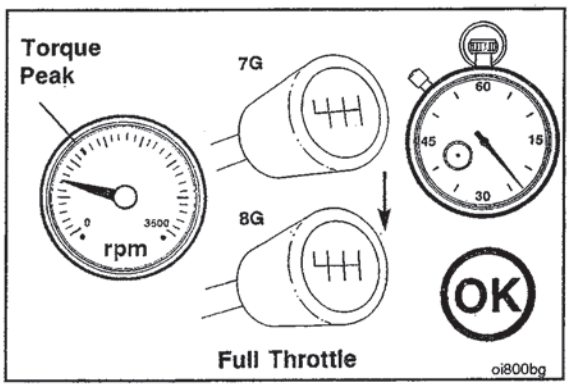

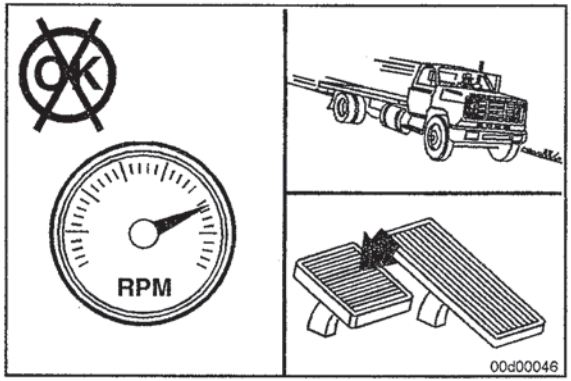


**⚠ CAUTION ⚠**

**Do not operate the engine beyond high-idle speed under any circumstances. Operating the engine beyond high-idle speed can cause severe engine damage. When descending a steep grade, use a combination of transmission gears and engine or service brakes to control the vehicle and engine speed.**

# Starting Procedure After Extended Shutdown or Oil Change

## General Information

Complete the following steps after each lubricating oil change, or after the engine has been shut off for more than 30 days to make sure the engine receives the correct oil flow through the lubricating oil system:

- Disconnect the electrical wire from the fuel injection pump solenoid valve.
- Rotate the crankshaft, using the starting motor, until oil pressure appears on the gauge, or the warning lamp goes out.
- Connect the electrical wire to the fuel injection pump solenoid valve.
- Start the engine. Refer to Normal Starting Procedures in this section.
- Refer to Section A for instructions to vent the fuel system.

**NOTE:** If the engine is allowed to run out of fuel, air is pulled into fuel lines. Refer to Section A for instructions to vent the fuel system.

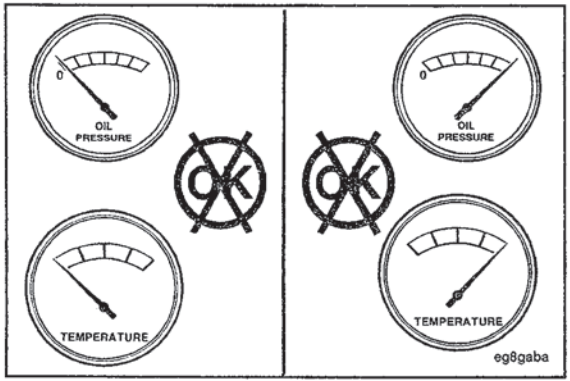


# Operating the Engine

## General Information

**⚠ CAUTION ⚠**

**Continuous operation with a low coolant temperature below 60°C [140°F], or high coolant temperature above 100°C [212°F], can damage the engine.**

Monitor the oil pressure and coolant temperature gauges frequently. Refer to Lubricating Oil System Specifications and Cooling System Specifications in Section V, for recommended operating pressures and temperatures. Shut off the engine if any pressure or temperature does **not** meet the specifications.

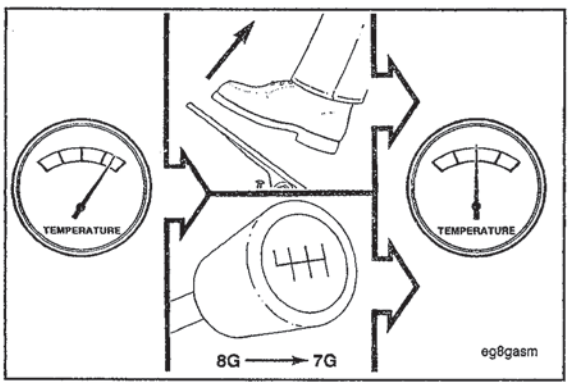


If an overheating condition starts to occur, reduce the power output of the engine by releasing the throttle pedal pressure or shifting the transmission to a lower gear, or both, until the temperature returns to the normal operating range. If the engine temperature does **not** return to normal, shut off the engine and refer to Troubleshooting Symptoms, in Section TS, or contact a Cummins Authorized Repair Location.

Most failures give an early warning. Look and listen for changes in performance, sound, or engine appearance that can indicate service or engine repair is needed. Some changes to look for are as follows:

- Engine misfires
- Vibration
- Unusual engine noises
- Sudden changes in engine operating temperatures or pressures
- Excessive smoke
- Loss of power
- An increase in oil consumption
- An increase in fuel consumption
- Fuel, oil, or coolant leaks.

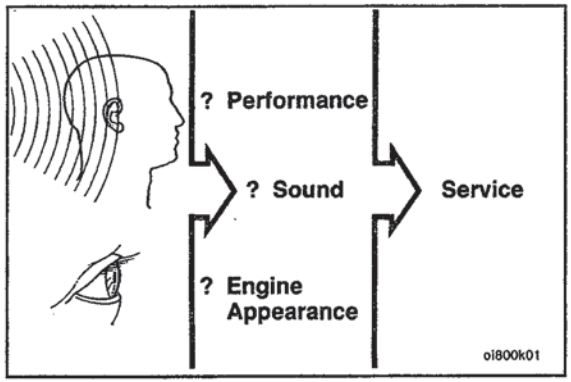

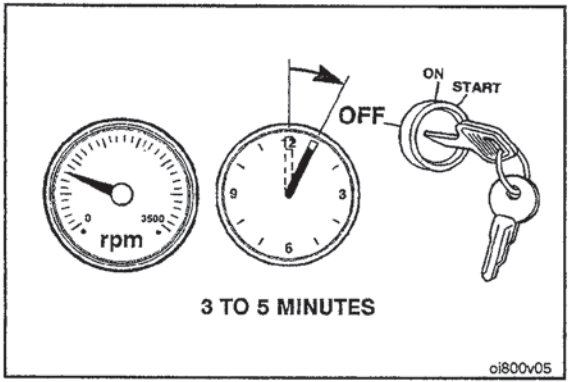


# Engine Shutdown

## General Information

- Allow the engine to idle 3 to 5 minutes after a full-load operation before shutting it off. This allows the engine to cool gradually and uniformly.
- Turn the ignition keyswitch to the OFF position.

# Section 2 - Maintenance Guidelines

## Section Contents

Page

**Maintenance Guidelines - Overview** ..... 2-1
General Information ..... 2-1

**Maintenance Record Form** ..... 2-10
Maintenance Data ..... 2-10

**Maintenance Schedule** ..... 2-3
General Information ..... 2-3

**Page References for Maintenance Instructions** ..... 2-8
General Information ..... 2-8

**Tool Requirements** ..... 2-2
General Information ..... 2-2

THIS PAGE LEFT INTENTIONALLY BLANK

# Maintenance Guidelines - Overview

## General Information

Cummins Engine Company, Inc. recommends operating the engine properly to remain covered by the warranty; follow maintenance schedule in this section.

If the engine is operating in ambient temperatures consistently below -18°C [0°F] or above 38°C [100°F], perform maintenance at shorter intervals. Shorter maintenance intervals are also required if the engine is operated in a dusty environment or if frequent stops are made. See your Cummins Authorized Repair Location for recommended intervals.

Use the chart provided in Section 2 as a convenient way to record maintenance.

**NOTE:** If the engine is equipped with a component or an accessory **not** manufactured by Cummins, refer to the component manufacturer's maintenance recommendations. A listing of suppliers' addresses and telephone numbers is provided in Component Manufacturers, Section M.

# Tool Requirements

## General Information

In the text, a symbol followed by the wrench size or tool description is used to identify the tools required to perform each step. A list of wrench sizes and descriptions indicates more than one tool is needed.

| Sockets | Wrenches | Other Tools |
|---|---|---|
| 19 mm | 19 mm | Injector puller, Part No. 3823276 |
| 17 mm | 17 mm | Ratchet (1/2- and 3/8-inch drive) |
| 15 mm | 15 mm | Torque wrench |
| | 14 mm | Flat-blade screwdriver |
| | 13 mm | 5/16 Allen wrench |
| | 10 mm | Feeler gauges (0.30-mm and 0.61-mm) |
| | | Engine barring gear, Part No. 3377371 |
| | | DCA4 Test kit, Fleetguard® Part No. CC-2626 |
| | | Filter wrenches (75- to 80-mm, 90- to 95-mm and 118- to 131-mm) |

# Maintenance Schedule

## General Information

| C Series Engine Maintenance Schedule: | | | | |
|---|---|---|---|---|
| Daily or Refueling | Every 10,000 km [6000 mi] 250 Hours, or 3 Months (3) | Every 19,000 km [12,000 mi], 500 Hours, or 6 Months (3) | Every 38,000 km [24,000 mi], 1000 Hours, or 1 Year (3) | Every 77,000 km [48,000 mi], 2000 Hours, or 2 Years (3) |
| Maintenance Check | Check/Inspect/Replace | Change/Replace/Inspect | Change/Replace/Inspect | Check/Inspect/ Replace |
| • Check fuel-water separator<br>– Check lubricating oil level<br>– Check coolant level<br>– Check drive belts<br>– Check cooling fan. | • Drain lubricating oil<br>• Replace lubricating filters<br>• Inspect air intake piping<br>• Inspect charge air cooler 4<br>– Clean charge air cooler<br>– Check air cleaner restriction. | • Clean fuel filter<br>• Replace fuel filter 5<br>• Vent fuel lines<br>• Vent injector supply lines<br>• Check cooling system<br>– Replace coolant filter. | • Adjust overhead set<br>• Check drive belts. | • Drain cooling system<br>• Replace cooling system<br>• Inspect vibration damper<br>• Inspect air compressor. |

1. Refer to the Lubricating Oil Change Interval chart given in this section to find the correct lubricating oil change interval for the engine application.
2. Initial valve lash clearance adjustment, subsequent adjustments to be performed at every eighth engine oil change for automotive engines, or 77,000-km [48,000-mi], 2000-hour, or 2-year interval, whatever occurs first.
3. **Must** use a heavy-duty antifreeze that meets the chemical composition of GM6038-M. The change interval is 2 years or 385,000 km [240,000 mi] for industrial engines.
4. Service interval is 2 years or 320,000 km [200,000 mi], whichever occurs first.
5. Service interval is every other engine oil change or 19,000 km [12,000 mi], 500 hours, or 6 months.

## Lubricating Oil Drain Interval

Refer to the following flowchart to determine the maximum recommended oil change and filter change intervals in kilometers, miles, hours, or months, whichever comes first.

Is the vehicle an on-highway application?

**If Yes -**

Refer to Table 1

**If No -**

Is the vehicle used in a construction, mining, or logging operation?

**If Yes -**

Refer to Table 2

**If No -**

Is the vehicle used in an agricultural or stationary power application?

**If Yes -**

Refer to Table 3

**If No -**

Use the following oil change interval, 10,000 km [6000 mi], 250 hours, or 3 months, whichever occurs first.

| Table 1, Use the Following Oil Drain Intervals for Your Application (1): | | | | |
|---|---|---|---|---|
| **Vehicle/ Equipment** | **km** | **mi** | **Hours** | **Months** |
| Refuse truck | 10,000 | 6000 | 250 | 3 |
| Mixer/dumper | 10,000 | 6000 | 250 | 3 |
| Delivery truck | 10,000 | 6000 | 250 | 3 |
| Shuttle or transit bus | 10,000 | 6000 | 250 | 3 |
| School bus | 10,000 | 6000 | 250 | 3 |
| Fire truck | 10,000 | 6000 | 250 | 3 |
| Recreational vehicle | 10,000 | 6000 | 250 | 3 |
| Regional haul truck | 16,000 | 10,000 | 250 | 3 |
| Coach bus | 16,000 | 10,000 | 250 | 3 |
| Vehicle accumulates 8000 mi/mth. or more. | 16,000 | 10,000 | 250 | 3 |
| (1) Or whichever occurs first. If your application accumulates high hours and low mileage, the change interval is determined by hours. | | | | |

| Table 2, Use the Following Oil Drain Intervals for Your Applicaiton (1): | | | | |
|---|---|---|---|---|
| **Vehicle/ Equipment** | **km** | **mi** | **Hours** | **Months** |
| Truck crane | 10,000 | 6000 | 250 | 3 |
| Yard spotter | 10,000 | 6000 | 250 | 3 |
| Paver | N/A | N/A | 250 | 6 |
| Cranes | N/A | N/A | 250 | 6 |
| Backhoe | N/A | N/A | 250 | 6 |
| Dozer | N/A | N/A | 250 | 6 |
| Scraper | N/A | N/A | 250 | 6 |
| Skidder | N/A | N/A | 250 | 6 |
| (1) Or whichever occurs first. If the application accumulates high hours and low mileage, the change interval is determined by hours. | | | | |

| Table 3, Use the Following Oil Drain Intervals for Your Application (1): | | |
|---|---|---|
| **Vehicle/Equipment** | **Hours** | **Months** |
| Farm tractors | 250 | 6 |
| Combines | 250 | 6 |
| Irrigation equipment | 250 | 6 |
| Generator set | 250 | 6 |
| Air compressor | 250 | 6 |
| Fire pump | 250 | 6 |
| Pleasure boat | 250 | 6 |
| Work boat | 250 | 3 |
| (1) Or whichever occurs first. If the application accumulates high hours and low mileage, the change interval is determined by hours. | | |

# Page References for Maintenance Instructions

## General Information

For your convenience, listed below are the page numbers that contain specific instructions for performing the maintenance checks listed in the maintenance schedule:

**Daily or Refueling**

- Drive belts - Inspect ..... 3-6
- Lubricating Oil Level - Check ..... 3-3
- Coolant Level - Check ..... 3-4
- Fan, Cooling - Inspect ..... 3-6
- Fuel-Water Separator - Drain ..... 3-2

**Every 10,000 km [6000 mi], 250 Hours, or 3 Months**

- Lubricating Oil and Filters - Change ..... 4-1
- Air Intake Piping - Check ..... 4-7
- Air Cleaner Restriction - Check ..... 4-10
- Charge Air Cooler - Clean ..... 4-7

**Every 19,000 km [12,000 mi], 500 Hours, or 6 Months**

- Coolant Filters - Replace ..... 5-8
- Cooling System - Check ..... 5-6
- Fuel Filter (Spin-On Type) - Change ..... 5-2
- Fuel Lines, Low Pressure - Vent ..... 5-4
- Injector Supply Lines - Vent ..... 5-5

**Every 38,000 km [24,000 mi], 1000 Hours, or 12 Months**

- Drive Belts - Check ..... 6-9

- Overhead Set - Adjust ..... 6-2

**Every 77,000 km [48,000 mi], 2000 Hours, or 2 Years**

- Air Compressor - Inspect ..... 7-9
- Cooling System - Drain and Replace ..... 7-2
- Vibration Damper - Inspect ..... 7-8

# Maintenance Record Form

## Maintenance Data

| Maintenance Record | |
|---|---|
| Engine Serial No.: | Engine Model: |
| Owner's Name: | Equipment Name/Number: |

Key to table headings:

A = Date
B = km [Miles], Hours or Time Interval
C = Actual km [Miles] or Hours
D = Maintenance Check Performed
E = Check Performed By
F = Comments

| A | B | C | D | E | F |
|---|---|---|---|---|---|
| | | | | | |
| | | | | | |
| | | | | | |
| | | | | | |
| | | | | | |

| A | B | C | D | E | F |
|---|---|---|---|---|---|
| | | | | | |
| | | | | | |
| | | | | | |
| | | | | | |
| | | | | | |
| | | | | | |
| | | | | | |
| | | | | | |
| | | | | | |
| | | | | | |
| | | | | | |
| | | | | | |
| | | | | | |
| | | | | | |
| | | | | | |
| | | | | | |
| | | | | | |

# NOTES

# Section 3 - Maintenance Procedures at Daily Interval

## Section Contents

Page

**Coolant Level** ..... 3-4
Maintenance Check ..... 3-4

**Daily Maintenance Procedures - Overview** ..... 3-1
General Information ..... 3-1

**Drive Belts** ..... 3-6
Maintenance Check ..... 3-6

**Fan, Cooling** ..... 3-7
Maintenance Check ..... 3-7

**Fuel-Water Separator** ..... 3-2
Maintenance Check ..... 3-2

**Lubricating Oil Level** ..... 3-3
Maintenance Check ..... 3-3

THIS PAGE LEFT INTENTIONALLY BLANK

# Daily Maintenance Procedures - Overview

## General Information

Preventative maintenance begins with day-to-day awareness of the condition of the engine and its systems.

Before starting the engine, check the lubricating oil and coolant levels; look for:

- Leaks
- Loose or damaged parts
- Worn or damaged belts
- Any change in engine appearance.

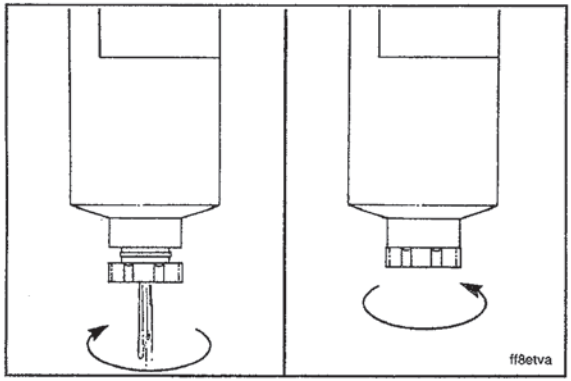




# Fuel-Water Separator

## Maintenance Check

**△ CAUTION △**

**Do not overtighten the valve. Overtightening can damage the threads.**

Drain the water and sediment from the fuel-water separator daily.

Shut off the engine. Open the drain valve. Turn the valve **counterclockwise** four complete turns until the valve drops down 1 inch. Drain the fuel-water separator of water and sediment until clear fuel is visible.

Push the valve up and turn the valve **clockwise** to close the drain valve.

**NOTE:** If more than 2 oz [59 ml] are drained, refill the filter to help prevent hard starting.

# Lubricating Oil Level

## Maintenance Check

Do **not** operate the engine with the lubricating oil level below the L (low) mark or above the H (high) mark. Wait at least 5 minutes after shutting off the engine to check the lubricating oil. This allows time for the lubricating oil to drain to the oil pan.

**NOTE:** The engine **must** be level when checking the lubricating oil level to make sure the measurement is correct.

**Lubricating Oil Capacity:** Low Mark to High Mark

3.8 liters [4 qt]

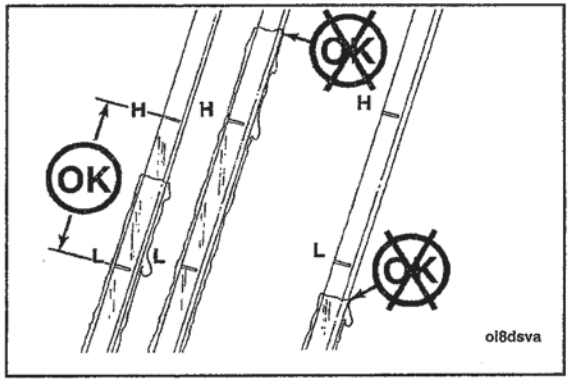

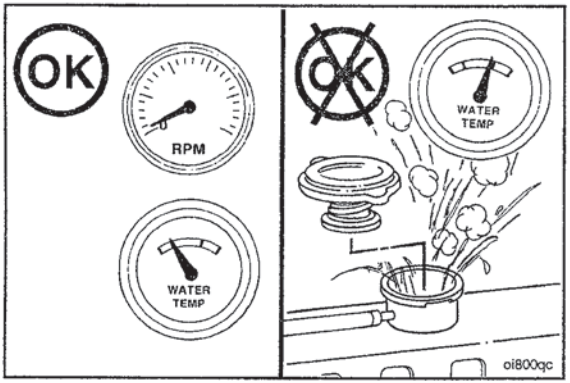


# Coolant Level

## Maintenance Check

**⚠ WARNING ⚠**

**Do not remove the radiator cap from a hot engine. Wait until the temperature is below 50°C [122°F] before removing the pressure cap. Failure to do so can result in personal injury from heated coolant spray or steam. Remove the filler cap slowly to relieve coolant system pressure.**

**⚠ CAUTION ⚠**

**Do not use a sealing additive to stop leaks in the coolant system. This can result in coolant system plugging and inadequate coolant flow, causing the engine to overheat.**

The coolant level **must** be checked daily.

**⚠ CAUTION ⚠**

**Do not add cold coolant to a hot engine. Engine castings can be damaged. Allow the engine to cool to below 50°C [122°F] before adding coolant.**

**NOTE:** If additional coolant is added to the cooling system, a 50-percent mixture of water and antifreeze **must** be premixed before being added to the system. Since the ability of antifreeze to remove heat from the engine is **not** as good as water, pouring antifreeze into the engine first could contribute to an overheated condition before the liquids are completely mixed.

**NOTE:** Some radiators have two fill necks, both of which **must** be filled when the cooling system is drained.

Fill the cooling system with coolant to the bottom of the fill neck in the radiator fill or expansion tank.

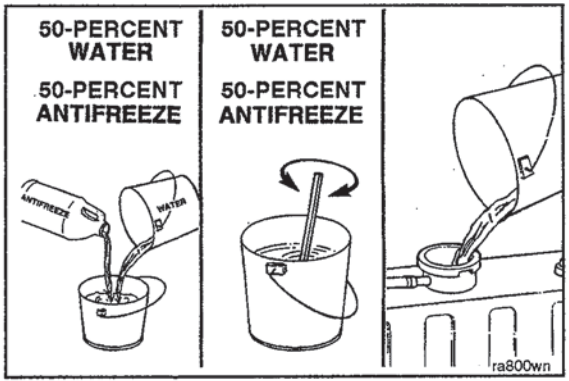


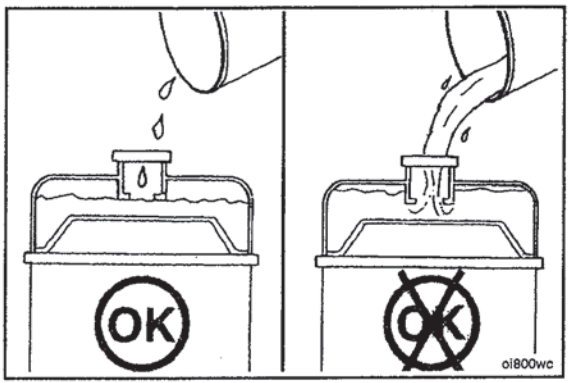

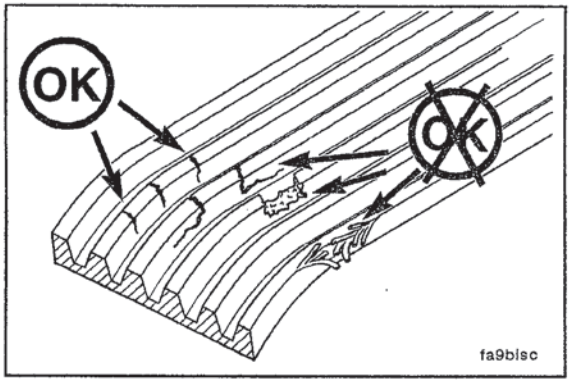


# Drive Belts

## Maintenance Check

Inspect the belt. Check the belt for intersecting cracks. Transverse (across the belt width) cracks are acceptable. Longitudinal (direction of belt length) cracks that intersect with transverse cracks are **not** acceptable. Replace the belt if it is frayed or has pieces of material missing. Refer to Section A.

# Fan, Cooling

## Maintenance Check

**⚠ WARNING ⚠**

**Personal injury can result from a fan blade failure. Never pull or pry on the fan. This can damage the fan blade(s) and cause fan failure.**

**⚠ WARNING ⚠**

**Do not straighten a bent fan blade or continue to use a damaged fan. A bent or damaged fan blade can fail during operation and cause personal injury or property damage.**

**NOTE:** Rotate the crankshaft by using the engine barring gear, Part No. 3824591.

An inspection of the cooling fan is required daily. Check for cracks, loose rivets, and bent or loose blades. Check the fan to make sure it is securely mounted. Tighten the cap-screws if necessary. Replace any fan that is damaged.

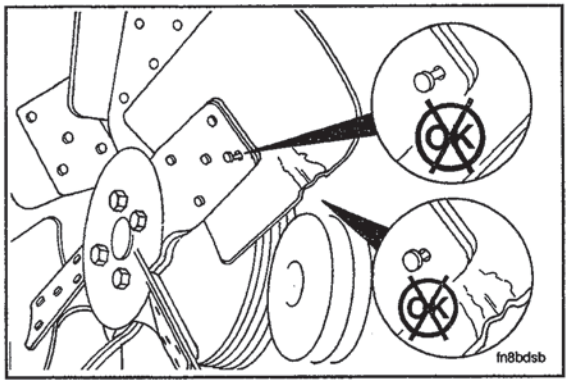

# NOTES

# Maintenance Procedures at 10,000 Kilometers [6000 Miles], 250 Hours, or 3 Months

## Section Contents

Page

**Air Cleaner Restriction** ..... 4-11
Maintenance Check ..... 4-11

**Air Intake Piping** ..... 4-7
Inspect for Reuse ..... 4-7

**Charge-Air Cooler (CAC)** ..... 4-7
Clean ..... 4-8
Inspect for Reuse ..... 4-7

**Lubricating Oil and Filters** ..... 4-1
Drain ..... 4-1
Fill ..... 4-5
Install ..... 4-3
Remove ..... 4-3

**Maintenance Procedures - Overview** ..... 4-1
General Information ..... 4-1

THIS PAGE LEFT INTENTIONALLY BLANK

# Maintenance Procedures - Overview

## General Information

All checks or inspections listed under daily or previous maintenance intervals **must** also be performed at this time, in addition to those listed under this maintenance interval.

# Lubricating Oil and Filters

## Drain

**⚠ WARNING ⚠**

**Avoid prolonged and repeated skin contact with used engine lubricating oils. Such prolonged and repeated contact may cause skin disorders or other bodily injury. Avoid excessive contact, wash thoroughly after contact. Keep out of reach of children.**

**⚠ WARNING ⚠**

**Some state and federal agencies have determined that used engine oil can be carcinogenic and cause reproductive toxicity. Avoid inhalation of vapors, ingestion, and prolonged contact with used engine oil.**

PROTECT THE ENVIRONMENT: Handling and disposal of used lubricating engine oil is subject to federal, state, and local laws and regulations. Use authorized waste disposal facilities, including civic amenity sites and garages providing authorized facilities for receipt of used lubricating oil. If in doubt, contact your state and local environmental authorities or the Environmental Protection Agency for guidance as to proper handling and disposal of used lubricating engine oil.

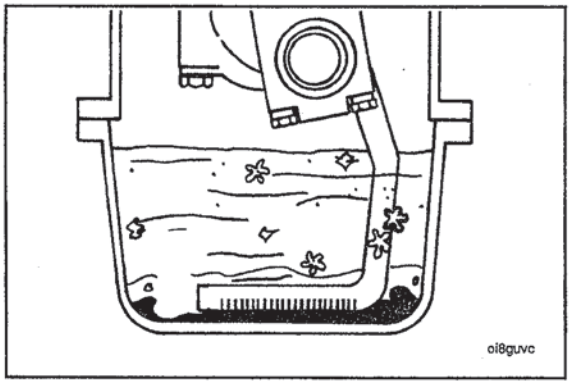


**NOTE:** If the engine is in service, under no circumstances can the lubricating oil drain interval extend beyond the intervals given in the charts.

Change the lubricating oil and filters to remove the contaminants suspended in the lubricating oil.

**NOTE:** Drain the lubricating oil **only** when it is hot and the contaminants are in suspension.

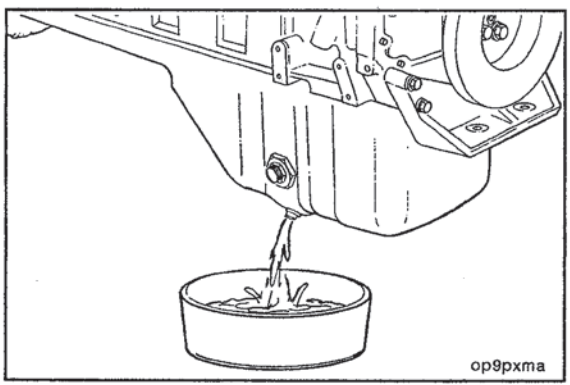


**17-mm Wrench**

**⚠ WARNING ⚠**

**To avoid personal injury, avoid direct contact of hot oil with your skin.**

**NOTE:** Use a container that can hold at least 25 liters [26 qt] of lubricating oil.

Operate the engine until the water temperature reaches 60°C [140°F]. Shut the engine off. Remove the lubricating oil drain plug.

## Remove

### 118- to 131-mm Filter Wrench

Clean the area around the lubricating oil filter head. Remove the filter. Clean the gasket surface of the filter head.

**NOTE:** The o-ring can stick on the filter head. Make sure it is removed.

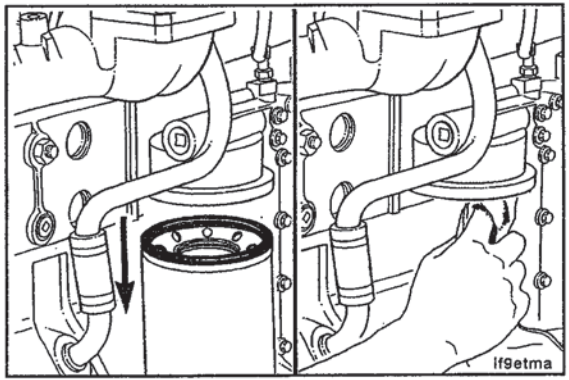


## Install

**NOTE:** Fill the filters with clean lubricating oil before installation.

**NOTE:** The LF3000 lubricating oil filter has two gaskets. Lubricate both gaskets.

Apply a light film of oil to the gasket sealing surface before installing the filters.

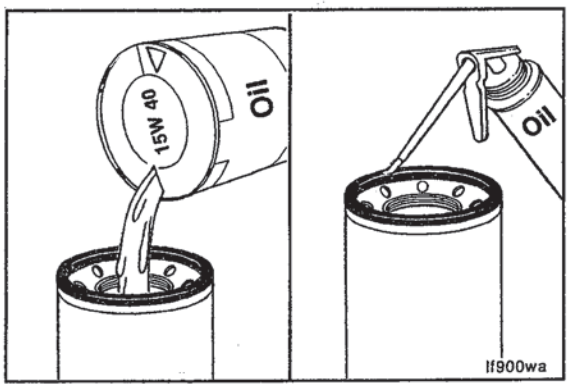

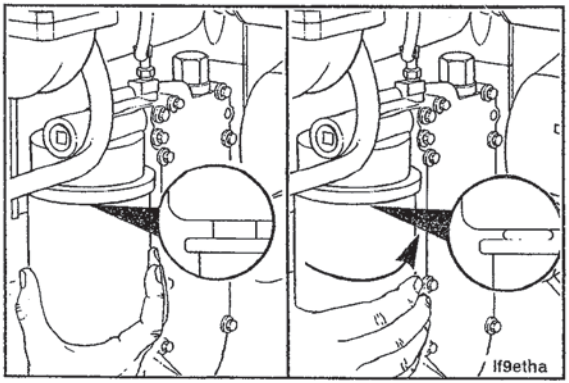


**⚠ CAUTION ⚠**

**Mechanical overtightening can distort the threads or damage the lubricating oil filter element seal.**

Install the lubricating oil filter as specified by the filter manufacturer.

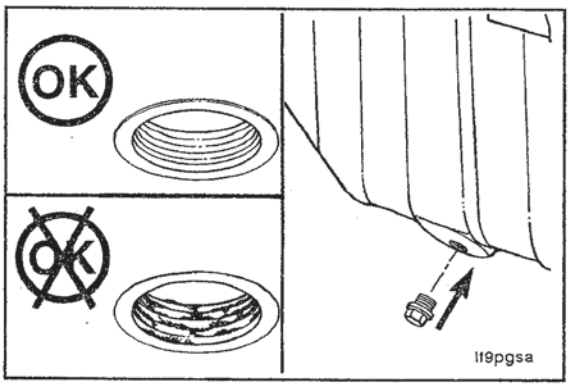


**17-mm Wrench**

Check and clean the lubricating oil drain plug threads and sealing surface.

Install the lubricating oil pan drain plug.

**Torque Value:**

| | | |
|---|---|---|
| For steel stamp oil pans | 80 N•m | [59 ft-lb] |

**Torque Value:**

| | | |
|---|---|---|
| For aluminum oil pans | 60 N•m | [44 ft-lb] |

## Fill

**NOTE:** Use a high-quality 15W-40 multiviscosity lubricating oil, such as Cummins Premium Blue®, or equivalent, in Cummins engines. Choose the correct oil for your operating climate as outlined in Section V.

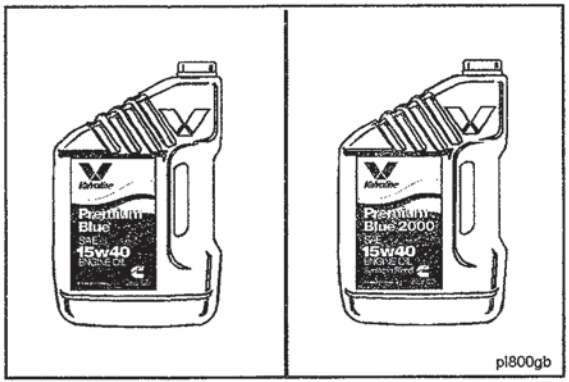


Fill the engine with clean lubricating oil to the proper level.

**System Capacity:**

23.8 liters [25.2 qt]

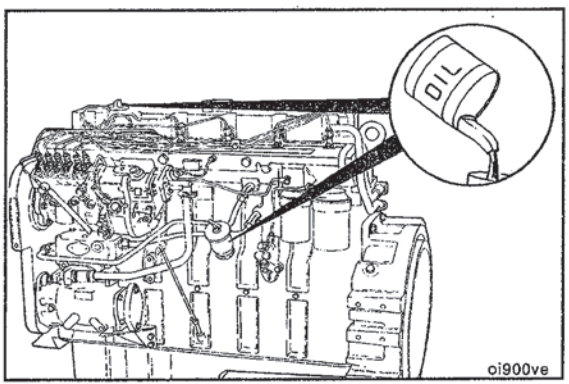

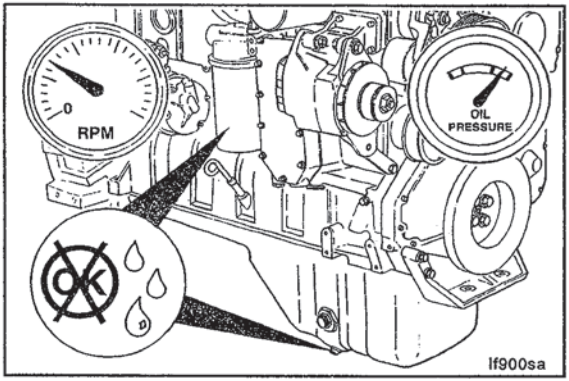


Operate the engine at low idle to inspect for leaks at the lubricating oil filter and the drain plug.

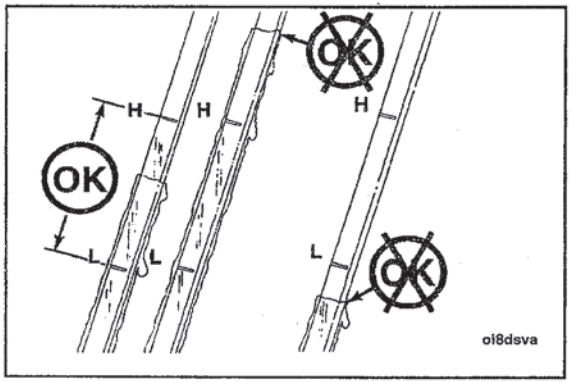


Stop the engine. Wait approximately 15 minutes to let the lubricating oil drain from the upper parts of the engine. Check the level again.

Add oil as necessary to bring the oil level to the H (high) mark on the dipstick.

# Air Intake Piping

## Inspect for Reuse

Inspect the intake piping for cracked hoses, loose clamps, or punctures that can damage the engine.

Tighten or replace parts, as necessary, to make sure the air intake system does **not** leak.

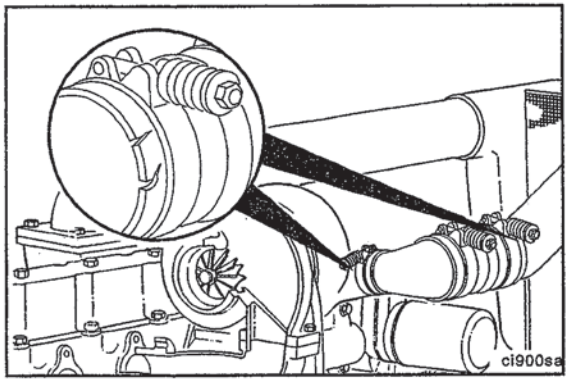


# Charge-Air Cooler (CAC)

## Inspect for Reuse

Inspect the charge air cooler for cracks, holes, or damage.

Inspect the tubes, fins, and welds for tears, breaks, or other damage.

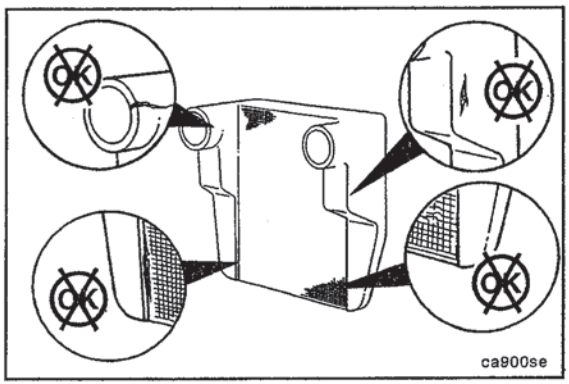

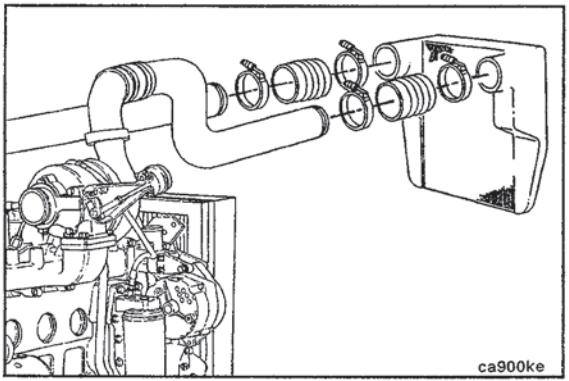


## Clean

If the engine experiences a turbocharger failure or any other occasion where oil or debris is put into the charge air cooler, the charge air cooler **must** be cleaned.

Remove charge air cooler from the vehicle. Refer to vehicle manufacturer's instructions.

**⚠ WARNING ⚠**

**When using solvents, acids, or alkaline materials for cleaning, follow the manufacturer's recommendations for use. Wear goggles and protective clothing to avoid personal injury.**

**⚠ CAUTION ⚠**

**Do not use caustic cleaners to clean the charge air cooler. Damage to the charge air cooler will result.**

Flush the charge air cooler internally with solvent in the opposite direction of normal airflow. Shake the charge air cooler and lightly tap on the end tanks with a rubber mallet to dislodge trapped debris. Continue flushing until all debris or oil is removed.

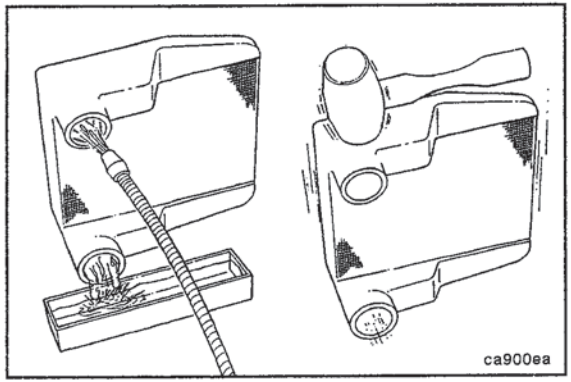

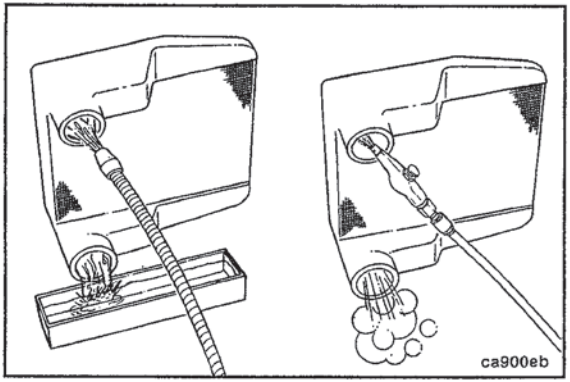


**⚠ WARNING ⚠**

**When using solvents, acids, or alkaline materials for cleaning, follow the manufacturer's recommendations for use. Wear goggles and protective clothing to avoid personal injury.**

**⚠ WARNING ⚠**

**Wear appropriate eye and face protection when using compressed air. Flying debris and dirt can cause personal injury.**

After the charge air cooler has been thoroughly cleaned of all oil and debris with solvent, wash the charge air cooler internally with hot, soapy water to remove the remaining solvent. Rinse thoroughly with clean water.

Blow compressed air into the charge air cooler in the opposite direction of normal airflow until the charge air cooler is dry internally.

Refer to the vehicle manufacturer's instructions for installation procedures.

# Air Cleaner Restriction

## Maintenance Check

Maximum intake air restriction is 635 mm $H_2O$ [25.0 in $H_2O$] for turbocharger engines. Naturally aspirated engines have a maximum restriction of 510 mm $H_2O$ [20.0 in $H_2O$].

The engine **must** be operated at rated rpm and full load to check maximum intake air restriction. Replace the air cleaner element when the restriction reaches the maximum allowable limit, or clean according to the manufacturer's recommendations.

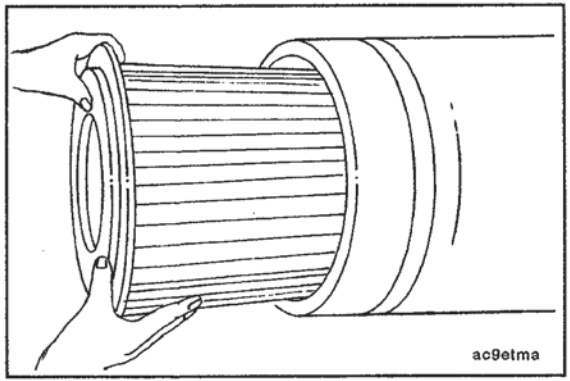


**NOTE:** Follow the manufacturer's instructions when cleaning or replacing the air cleaner element.

Check the air cleaner service indicator, if equipped. Change the filter element when the red indicator flag (2) is at the raised position in the window (1).

After the air cleaner has been serviced, reset the button (3) in the end of the service indicator.

**NOTE:** Do **not** operate the engine without an air cleaner. Intake air **must** be filtered to prevent dirt and debris from entering the engine and causing premature wear.

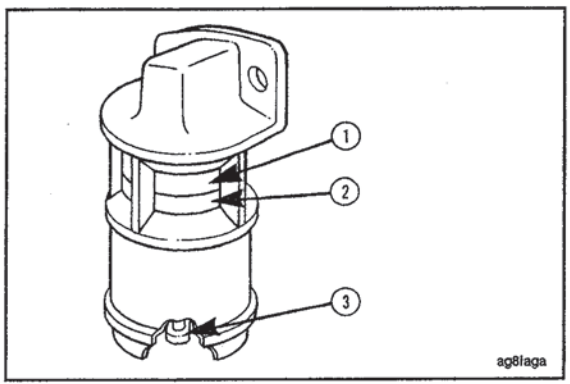

# NOTES

# Maintenance Procedures at 19,000 Kilometers [12,000 Miles], 500 Hours, or 6 Months

## Section Contents

Page

**Coolant Filter** ..... 5-9
Install ..... 5-10
Remove ..... 5-9

**Cooling System - Overview** ..... 5-7
Coolant Blending and Mixing ..... 5-7
Fleetguard® Nelson® DCA4 Service Filters and Liquid Precharge ..... 5-8

**Fuel Filter (Spin-On Type)** ..... 5-2
Clean ..... 5-2
Install ..... 5-3
Remove ..... 5-2

**Fuel Lines, Low Pressure** ..... 5-5
Vent ..... 5-5

**Fuel Supply Lines** ..... 5-4
Vent ..... 5-4

**Injector Supply Lines (High Pressure)** ..... 5-6
Vent ..... 5-6

**Maintenance Procedures - Overview** ..... 5-1
General Information ..... 5-1

THIS PAGE LEFT INTENTIONALLY BLANK

# Maintenance Procedures - Overview

## General Information

All checks or inspections listed under daily or previous maintenance intervals **must** also be performed at this time, in addition to those listed under this maintenance interval.

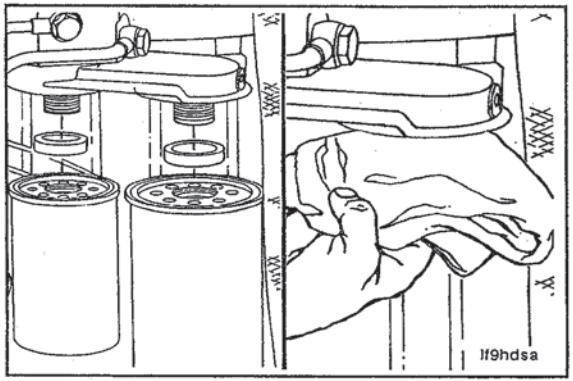


# Fuel Filter (Spin-On Type)

## Clean

**75- to 80-mm and 90- to 95-mm Wrenches**

Clean the area around the fuel filter head. Remove the filters. Clean the gasket surface of the fuel filter head.

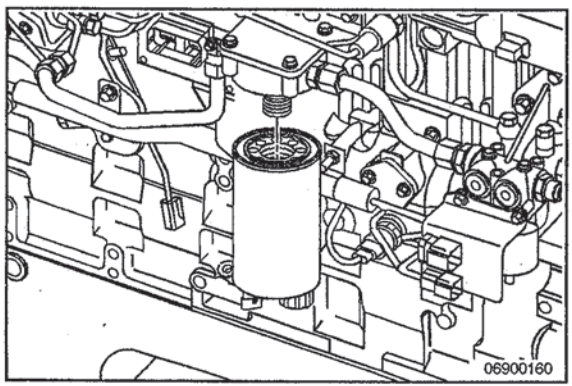


## Remove

Remove the fuel filter.

## Install

Replace the o-ring.

Fill the new fuel filter(s) with clean fuel, and lubricate the o-ring seal with clean lubricating engine oil.

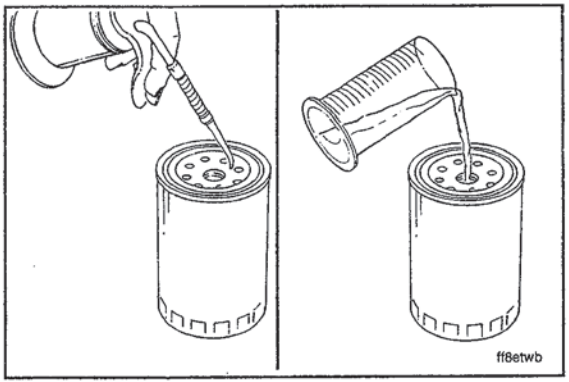


**⚠ CAUTION ⚠**

**To reduce possibility of fuel leaks, make sure the fuel filter is installed tightly but not overtightened. Mechanical overtightening will damage the fuel filter.**

Install the fuel filter as specified by the filter manufacturer.

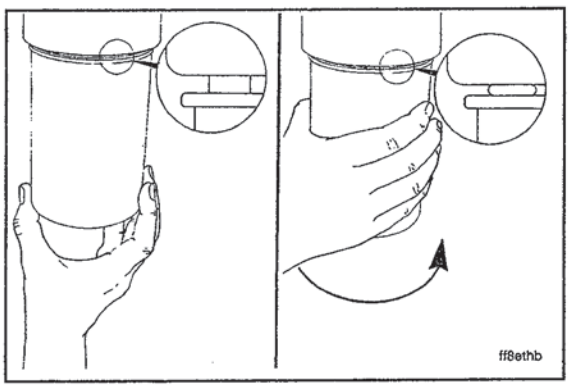

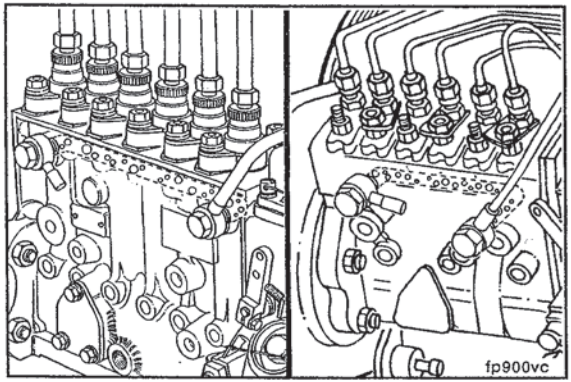




# Fuel Supply Lines

## Vent

Controlled venting is provided at the injection pump through the fuel drain manifold. Small amounts of air introduced by changing the fuel filters or fuel injection pump supply line will be vented automatically if the fuel filter is changed in accordance with the instructions.

**NOTE:** Manual bleeding is required if:

- The fuel filter is **not** filled prior to installation
- Fuel injection pump is replaced
- High-pressure fuel line connections are loosened or fuel lines replaced
- Initial engine start up or start up after an extended period of no engine operation occurs
- Vehicle fuel tank has been run until empty.

# Fuel Lines, Low Pressure

## Vent

Open the bleed screw.

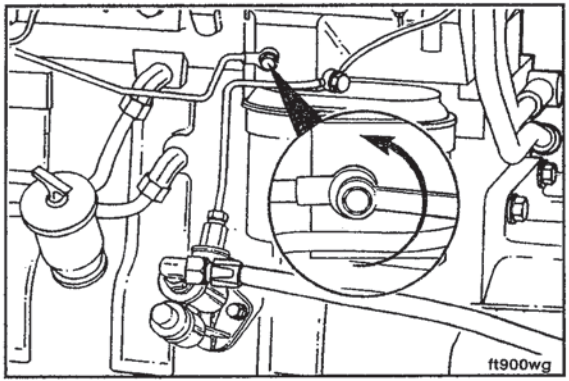


Operate the plunger on the fuel transfer pump until the fuel flowing from the fitting is free of air.

Tighten the bleed screw.

**Torque Value:** 9 N•m [80 in-lb]

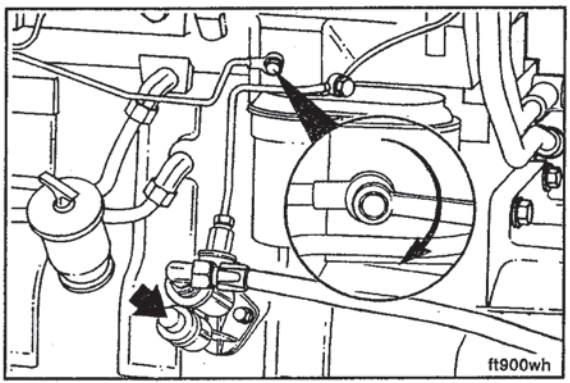

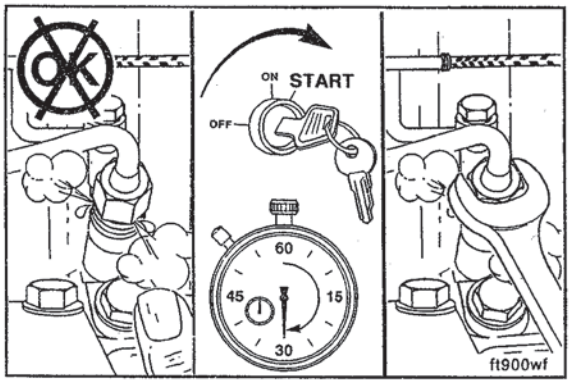


# Injector Supply Lines (High Pressure)

## Vent

**⚠ WARNING ⚠**

**The pressure of the fuel in the line is sufficient to penetrate the skin and cause serious personal injury. Wear gloves and protective clothing.**

**17-mm (PES.A, PES.MW), 19-mm (PES.P) Wrenches**

Loosen the fittings at the injectors, and crank the engine to allow entrapped air to bleed from the lines. Tighten the fittings.

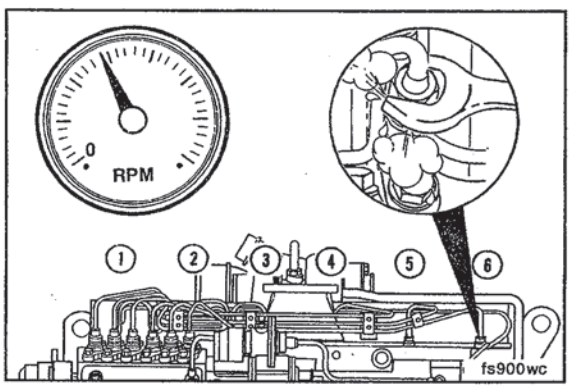


**⚠ WARNING ⚠**

**It is necessary to put the engine in the run position. Because the engine could start, be sure to follow all the safety precautions. Use the normal engine starting procedure.**

Start the engine and vent one line at a time until the engine runs smoothly.

**NOTE:** Do **not** engage the starter for more than 30 seconds each time when it is used to vent the system: Wait 2 minutes between engagements.

# Cooling System - Overview

## Coolant Blending and Mixing

Check the antifreeze concentration. Use ethylene-glycol base antifreeze to protect the engine to -37°C [-35°F] throughout the year.

**Antifreeze is essential in all climates.** It broadens the operating temperature range by lowering the coolant freezing point and by raising the coolant boiling point.

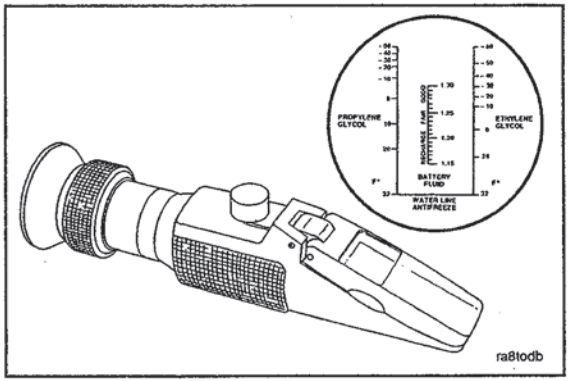


**⚠ CAUTION ⚠**

**Inadequate concentration of the coolant additive can result in major corrosive damage to cooling system components. Overconcentration can cause formation of "gel" that can cause restriction, plugging of coolant passages, and overheating.**

**NOTE:** If the engine coolant is changed, the coolant filters **must** also be changed.

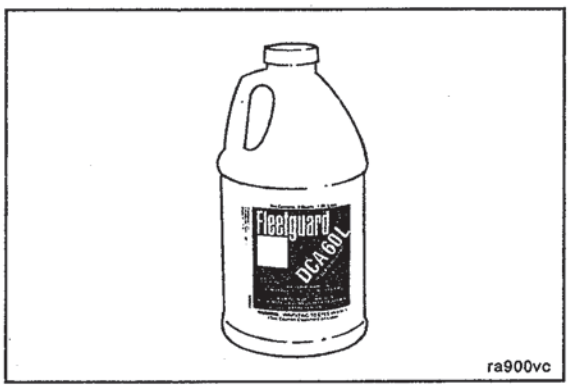

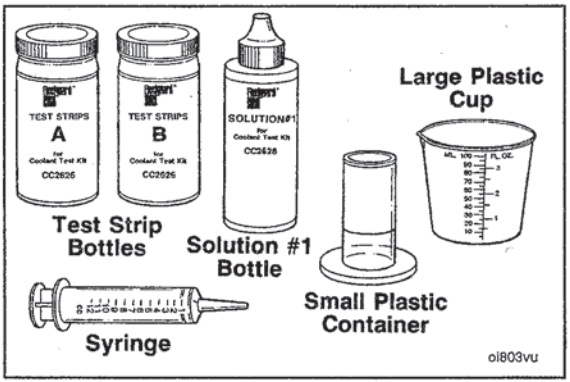


The cooling system **must** contain the proper coolant additive units to provide the best chemical protection. Refer to the Engine Specifications (Section V).

**DCA4 Test Kit:** Use **only** DCA4 coolant test kit, Fleetguard® Part No. CC-2626, to check the coolant additive concentration in the cooling system.

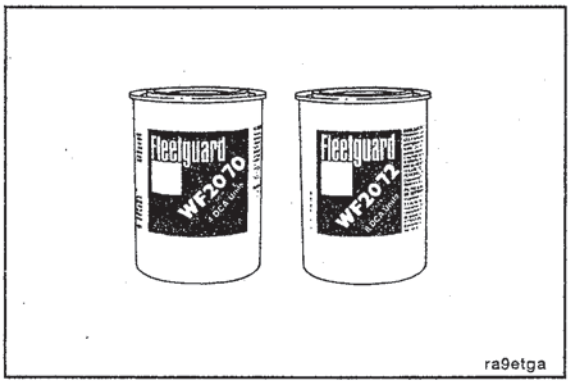


## Fleetguard® Nelson® DCA4 Service Filters and Liquid Precharge

The correct coolant filter to be used is determined by the total cooling system capacity and other operational factors.

Refer to the DCA4 Maintenance Guide in Engine Specifications (Section V) for the correct selection of the filter.

# Coolant Filter

## Remove

**⚠ WARNING ⚠**

**Do not remove the radiator cap from a hot engine. Hot steam will cause serious personal injury. Wait until the coolant temperature is below 50°C [122°F] before removing the pressure cap. Remove the coolant system pressure cap and close the shutoff valve before removing coolant filter. Failure to do so can result in personal injury from heated coolant spray.**

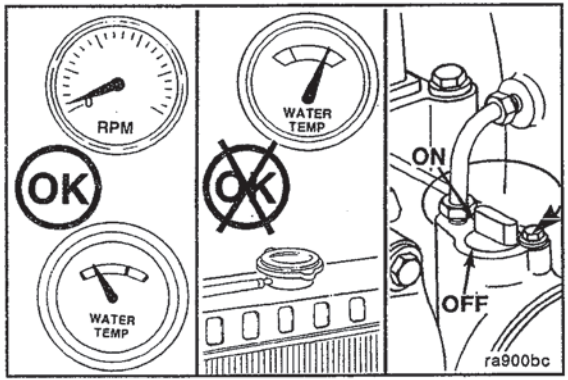


Remove and discard the coolant filter. Clean the gasket surface.

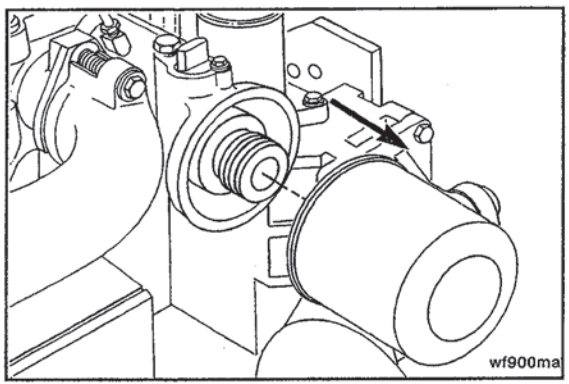

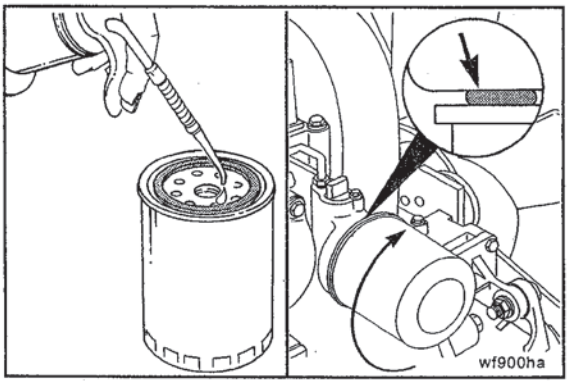


## Install

Apply a light film of lubricating oil to the gasket sealing surface before installing the new coolant filter.

**NOTE:** Do **not** allow oil to get inside the filter. Oil will adversely affect the DCA.

Install the coolant filter on the filter head. Tighten the filter until the gasket contacts the filter head surface.

Tighten the coolant filter an additional one-half to three-fourths of a turn, or as specified by the filter manufacturer.

**△ CAUTION △**

**Mechanical overtightening can distort the threads or damage the filter head.**

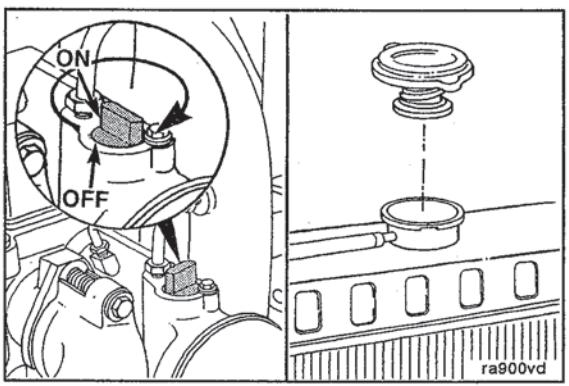


**△ CAUTION △**

**The valve must be in the ON position to prevent engine damage.**

Open the shutoff valve and install the coolant system pressure cap.

Operate the engine, and check for coolant leaks.

After the air has been purged from the system, check the coolant level again.

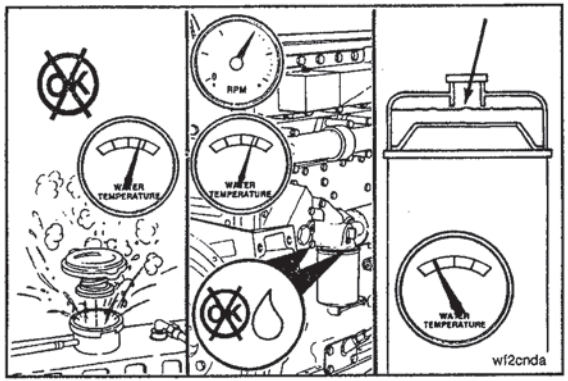

# NOTES

# Maintenance Procedures at 38,000 Kilometers [24,000 Miles], 1000 Hours, or 1 Year

## Section Contents

Page

**Drive Belts** ..... 6-9
Test ..... 6-9

**Maintenance Procedures - Overview** ..... 6-1
General Information ..... 6-1

**Overhead Set** ..... 6-2
Adjust ..... 6-2

THIS PAGE LEFT INTENTIONALLY BLANK

# Maintenance Procedures - Overview

## General Information

All checks or inspections listed under daily or previous maintenance intervals **must** also be performed at this time, in addition to those listed under this maintenance interval.

The procedures given in this section for valve lash adjustment are to be performed at the initial 38,000 km [24, 000 mi] adjustment. Subsequent adjustments are to be performed at 77,000 km [48,000 mi] intervals.

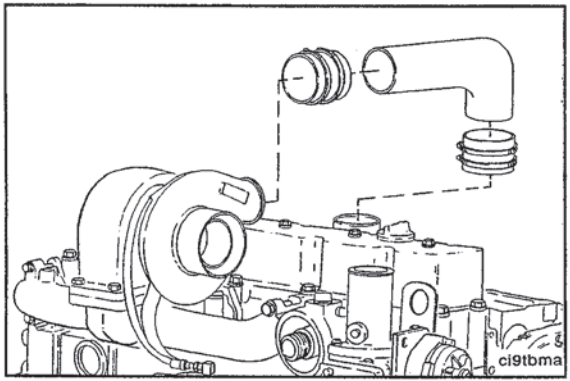


# Overhead Set

## Adjust

### Screwdriver

Remove the air crossover tube from the engine if equipped.

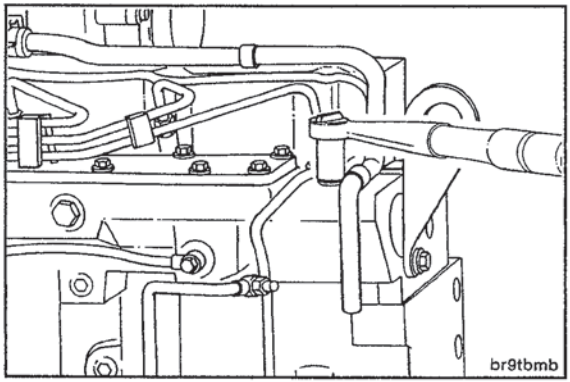


### 10- and 15-mm Wrenches

Disconnect the support clamps, hose clamp, and waste-gate sensing line. Remove the crankcase vent tube and any other parts that would prevent removal of the valve cover.

**15-mm Wrench**

Remove valve cover.

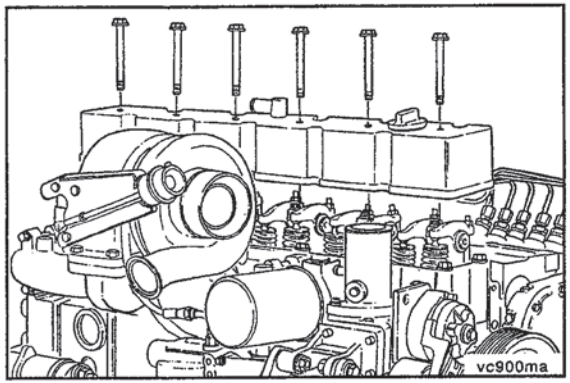


**1/2-Inch Drive; Barring Gear, Part No. 3824591**

Locate top dead center for cylinder No. 1 by rotating the crankshaft slowly while pressing on the engine timing pin.

The barring gear inserts into the flywheel housing and engages the flywheel ring gear. The engine can then be rotated by hand using a 1/2-inch ratchet or breaker bar.

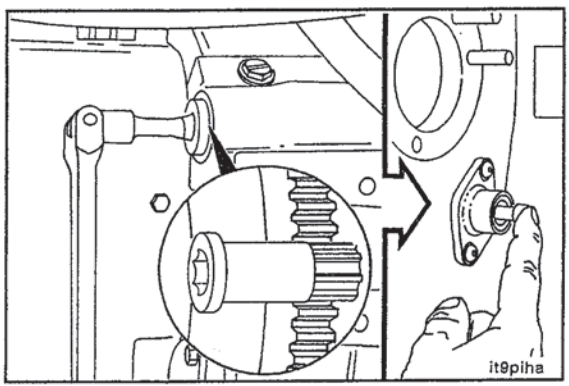

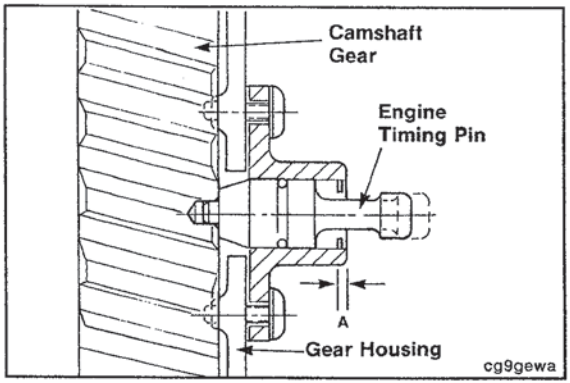


When the engine timing pin engages the hole in the camshaft gear, cylinder No. 1 is at top dead center on the compression stroke.

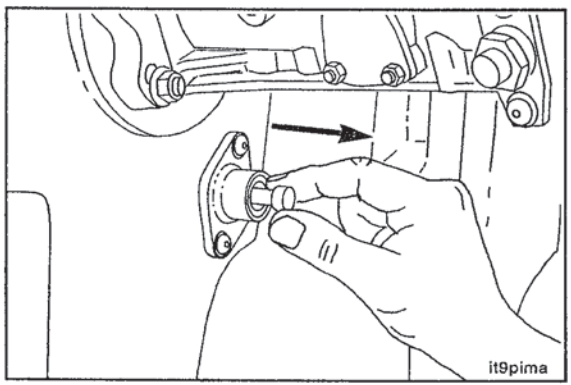


**⚠ CAUTION ⚠**

**Be sure to disengage the engine timing pin after locating top dead center to prevent damage to the engine timing pin.**

**Feeler Gauge**

Intake clearance: 0.30 mm [0.012 in].

Exhaust clearance: 0.61 mm [0.024 in].

Check/set valves with engine cold - below 60°C [140°F].

**NOTE:** The clearance is correct when some resistance is "felt" when the feeler gauge is slipped between the valve stem and the rocker lever.

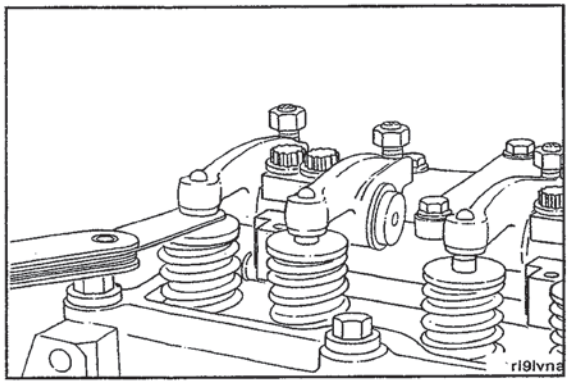


**14-mm, Flat-Blade Screwdriver**

Locate top dead center for cylinder No. 1.

Check/adjust the valves indicated for STEP A (I = intake; E = exhaust).

After tightening the rocker lever locknut, check the valve clearance to make sure the valve clearance has **not** changed.

**Torque Value:** 24 N•m [212 in-lb]

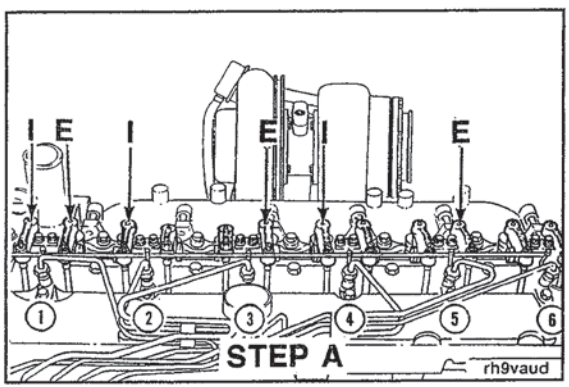

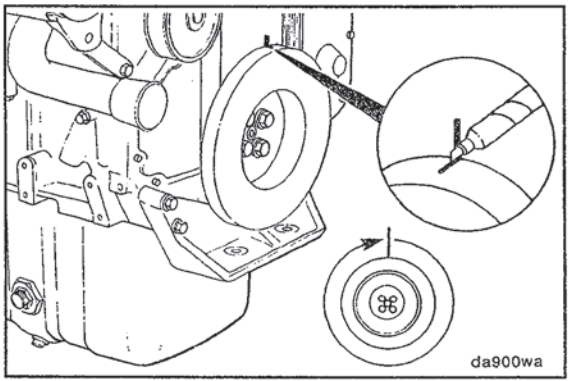


**⚠ CAUTION ⚠**

**Be sure the engine timing pin is disengaged to prevent damage to the engine timing pin.**

Mark vibration damper and rotate the crankshaft 360 degrees.

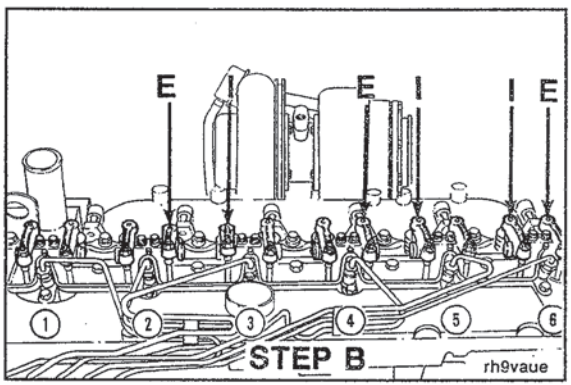


**14-mm, Flat-Blade Screwdriver**

Set the valves indicated for STEP B.

After tightening the rocker lever locknut, check the valve clearance to make sure the valve clearance has **not** changed.

**Torque Value:** 24 N•m [212 in-lb]

**NOTE:** If the seal is **not** damaged, it can be used again. If the seal is damaged, install a new seal.

Install the rubber seal into the groove in the valve cover. Start the installation at the overlap area shown in the illustration. Do **not** stretch the rubber seal.

If the seal has more overlap than shown in the illustration, trim the length to provide the correct overlap.

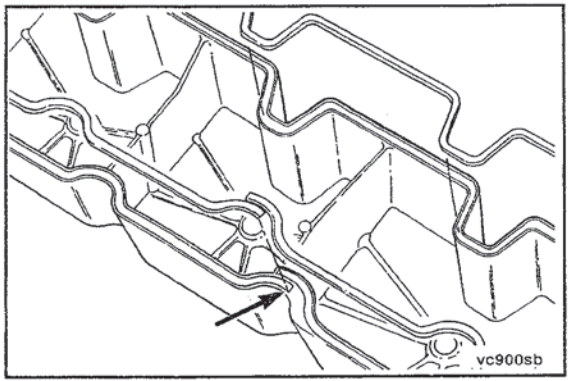


**15 mm Wrench**

Install new sealing o-rings on the capscrews.

Install the valve cover and wastegate sensing tube.

**Torque Value:** 24 N•m [212 in-lb]

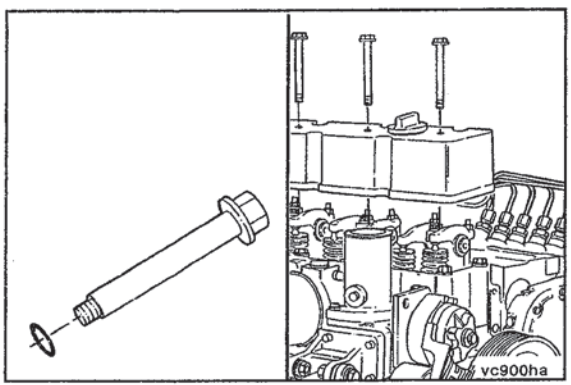

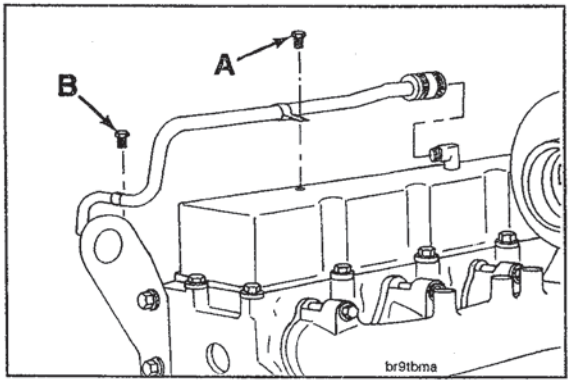


**10- and 15-mm Wrenches**

Install the crankcase vent tube, and secure with the support clamps and hose clamp.

**Torque Value:**

| | |
|---|---|
| A = | 24 N•m [212 in-lb]. |
| B = | 43 N•m [32 in-lb]. |

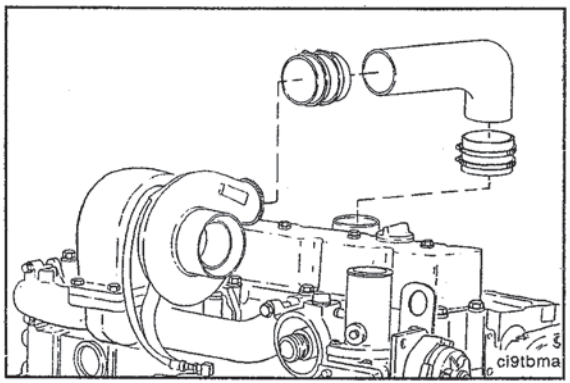


**Screwdriver**

Install the air crossover tube and any other parts previously removed to gain access to the valve cover.

# Drive Belts

## Test

Measure the belt deflection at the longest span of the belt (1).

**Maximum Deflection:** 9.5 to 12.7 mm [3/8 to 1/2 in]

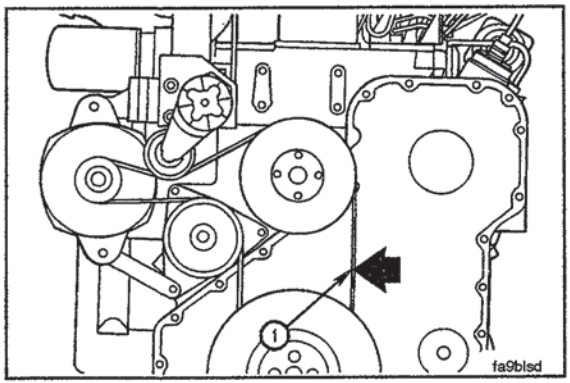


**NOTE:** The Cummins belt tension gauge, Part No. ST-1293, can be used.

**Torque Value:**
Tension Limit: 360 to 490 N•m [266 to 361 ft-lb].

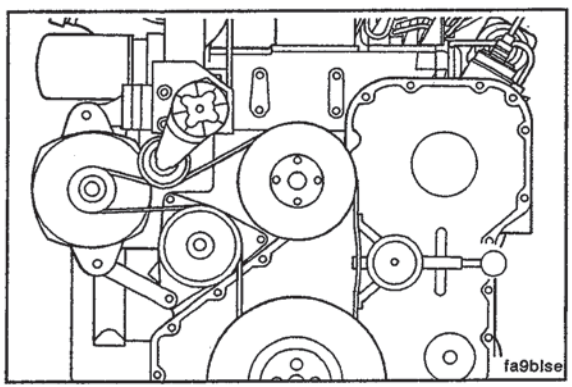

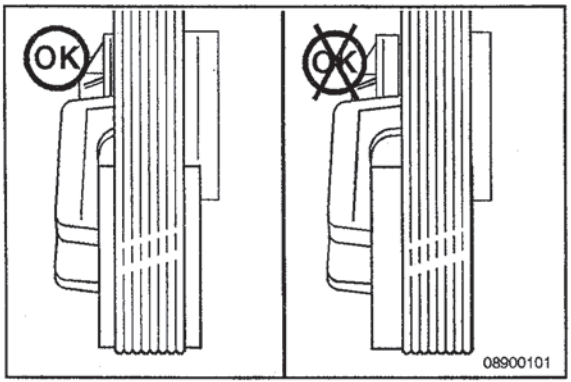


Check the location of the drive belt on the belt tensioner pulley. The belt should be centered on, or centered close to the middle of, the pulley. Unaligned belts, either too far forward or backward, can cause belt wear, belt roll-off failures, or increase uneven tensioner bushing wear.

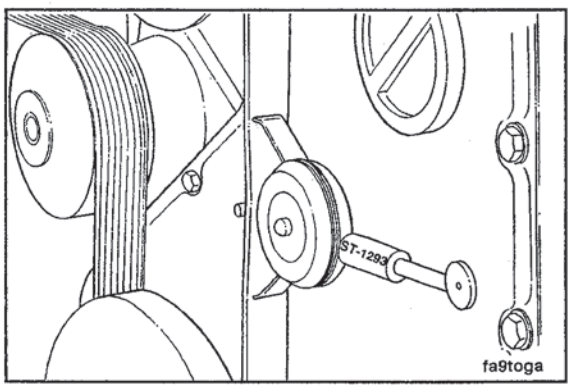


Use the Cummins **belt tensioner gauge, Part No. ST-1293**, to measure the tension in the drive belt. This needs to be in the range of 360 to 490 N•m [266 to 361 ft-lb] for the C Series.

Check the tensioner arm, pulley, and stops for cracks. If any cracks are noticed, the tensioner **must** be replaced.

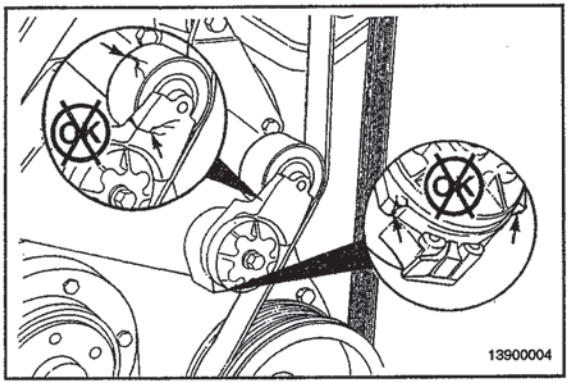


With the belt on, verify that neither tensioner arm stops are in contact with the spring casing stop. If either stop is touching, the drive belt **must** be replaced. After replacing the belt, if the tensioner arm stops are still in contact with the spring casing stop, replace the tensioner.

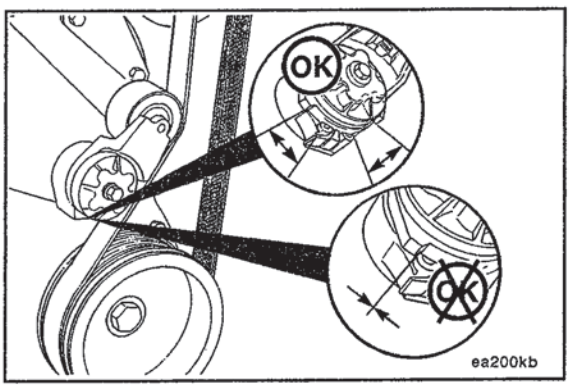

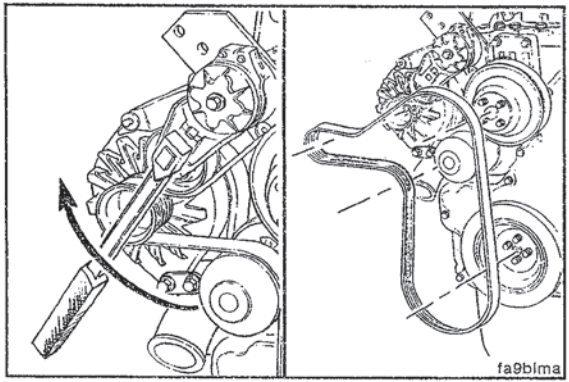


Remove the drive belt, and check the torque of the tensioner capscrew. After checking the torque, use a breaker bar with a 3/8-inch ratchet to rotate the tensioner slowly away from the area of belt contact. If the arm rotates with any roughness or hesitancy, replace the tensioner.

**Torque Value:**

| | | |
|---|---|---|
| B and C Series engines | 43 N•m | [32 ft-lb] |

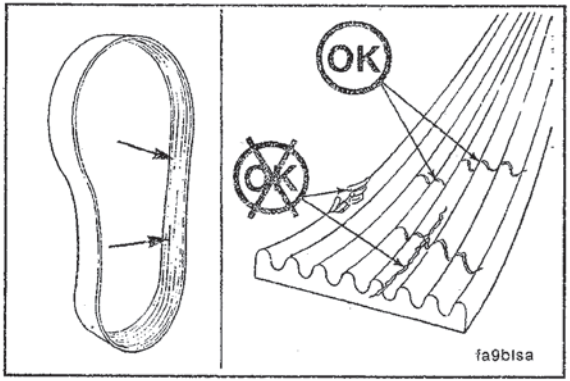


Check the belt for damage. Transverse (across the belt width) cracks are acceptable. Longitudinal (direction of the belt length) cracks that intersect with transverse cracks are **not** acceptable. If the belt is frayed or has any piece of material missing, the belt is unacceptable and needs to be replaced.

With the belt removed, verify that the tensioner arm stop is in contact with the spring case stop. If these two are **not** touching, the tensioner **must** be replaced.

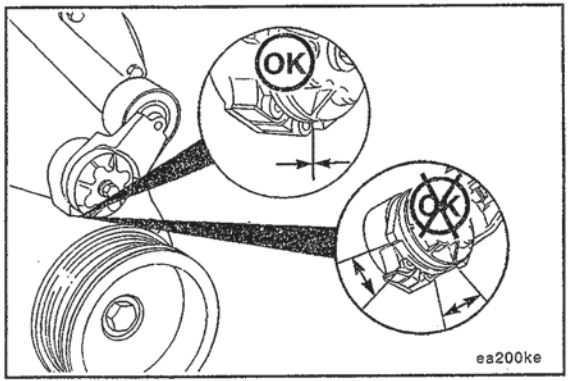


With the belt removed, check to be sure that the tensioner pulley rotates freely.

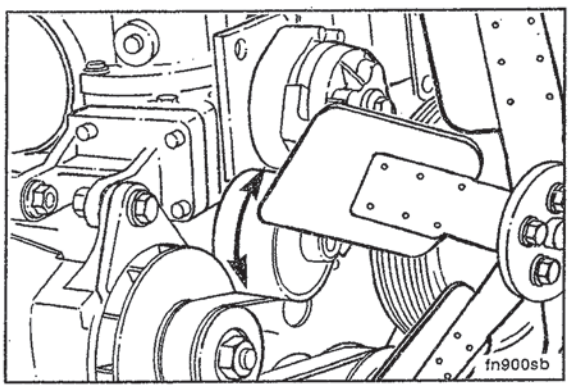

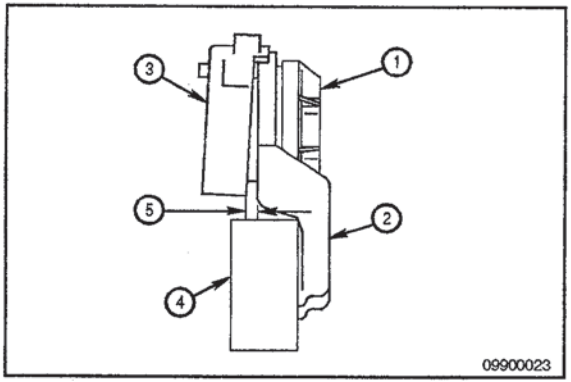


Measure the clearance between the tensioner spring case and the tensioner arm to verify tensioner wear-out and uneven bearing wear. If the clearance exceeds 3 mm [0.12 in] at any point, the tensioner failed and **must** be replaced as a complete assembly. Experience has revealed that tensioners generally will show a larger clearance gap near the lower portion of the spring case, resulting in the upper portion rubbing against the tensioner arm. **Always** replace the belt when a tensioner is replaced.

1. Tensioner cap
2. Tensioner arm
3. Spring case
4. Tensioner pulley
5. Clearance gap

Inspect the tensioner for evidence of the tensioner arm contacting the tensioner cap. If there is evidence of the two areas making contact, the pivot tube bushing has failed and the tensioner **must** be replaced.

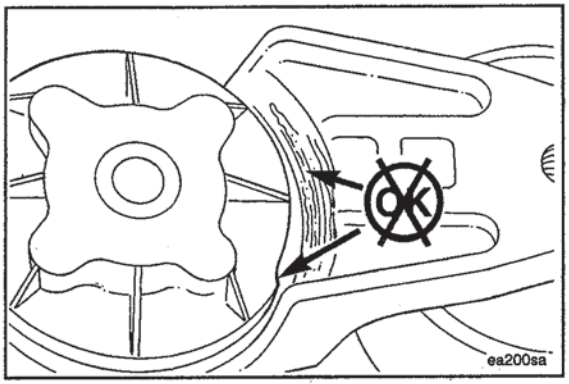

# NOTES

# Maintenance Procedures at 77,000 Kilometers [48,000 Miles], 2000 Hours, or 2 Years

## Section Contents

Page

**Air Compressor** ..... 7-9
Inspect ..... 7-9

**Cooling System** ..... 7-2
Drain ..... 7-2
Fill ..... 7-6
Flush ..... 7-3

**Maintenance Procedures - Overview** ..... 7-1
General Information ..... 7-1

**Vibration Damper** ..... 7-8
Inspect ..... 7-8

THIS PAGE LEFT INTENTIONALLY BLANK

# Maintenance Procedures - Overview

## General Information

All checks or inspections listed under daily or previous maintenance intervals **must** also be performed at this time, in addition to those listed under this maintenance interval.

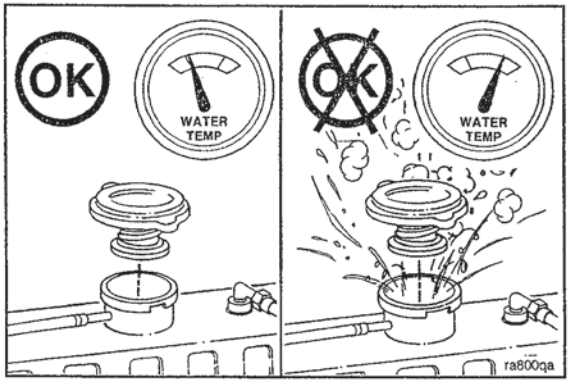


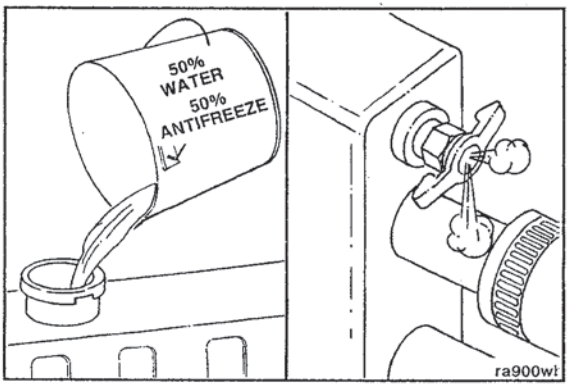


# Cooling System

## Drain

**⚠ WARNING ⚠**

**Wait until the temperature is below 50°C [122°F] before removing the coolant system pressure cap. Failure to do so can cause personal injury from heated coolant spray.**

**⚠ WARNING ⚠**

**Coolant is toxic. Keep away from children and pets. If not reused, disposed of in accordance with local environmental regulations.**

**NOTE:** A drain pan with a capacity of 25 liters [26 qt] will be adequate for most applications.

Drain the cooling system by opening the drain valve on the radiator and engine lubricating oil cooler.

Check for damaged hoses and loose or damaged hose clamps. Replace as required. Check the radiator for leaks, damage, and dirt buildup. Clean and repair as required.

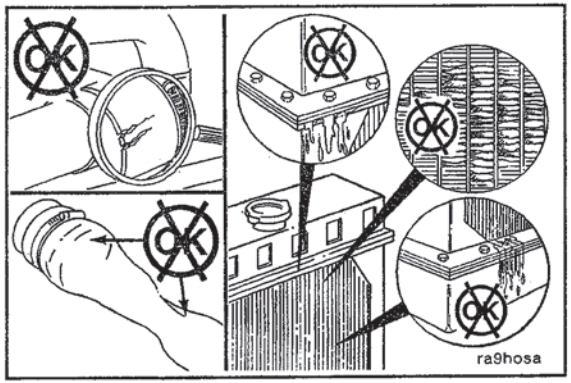


## Flush

**△ CAUTION △**

**During filling, air must be vented from the engine coolant passages. Open the engine venting petcock and the petcock on the aftercooler for aftercooled engines. The system must be filled slowly to prevent air locks. Wait 2 to 3 minutes to allow air to be vented; then add mixture to bring the level to the bottom of the radiator filler neck.**

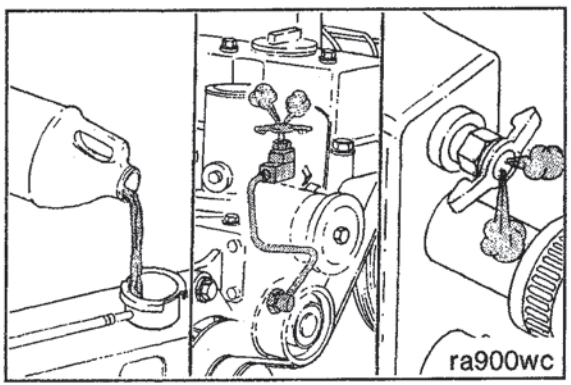

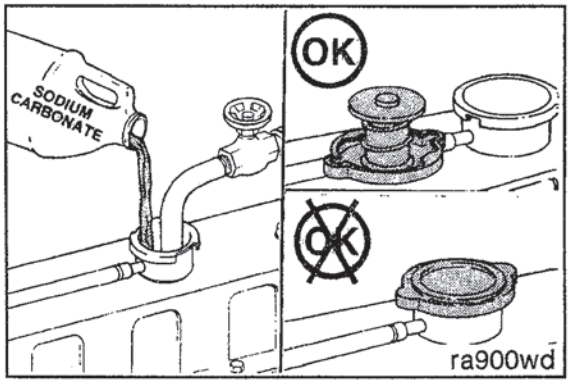


**⚠ CAUTION ⚠**

**Do not install the radiator cap. The engine is to be operated without the radiator cap for the coolant system flushing process.**

**NOTE:** Use 0.5 kg [1.0 lb] of sodium carbonate for every 23 liters [6.0 gal] of water.

Fill the system with a mixture of sodium carbonate and water (or a commercially available equivalent).

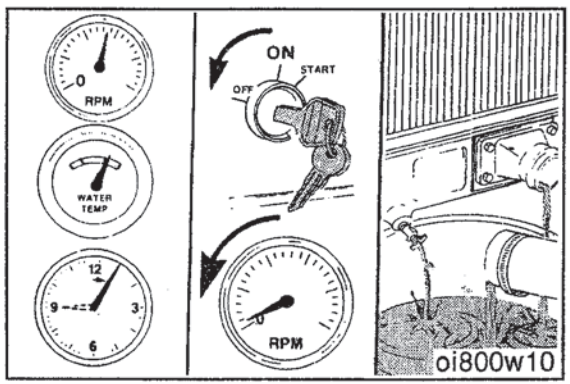


**⚠ WARNING ⚠**

**Coolant is toxic. Keep away from children and pets. If not reused, dispose of in accordance with local environmental regulations.**

Operate engine for 5 minutes with the coolant temperature above 80°C [176°F].

Shut the engine off, and drain the cooling system.

Fill the cooling system with clean water.

**NOTE:** Be sure to vent the engine and aftercooler for complete filling.

**NOTE:** Do **not** install the radiator cap or the new coolant filter.

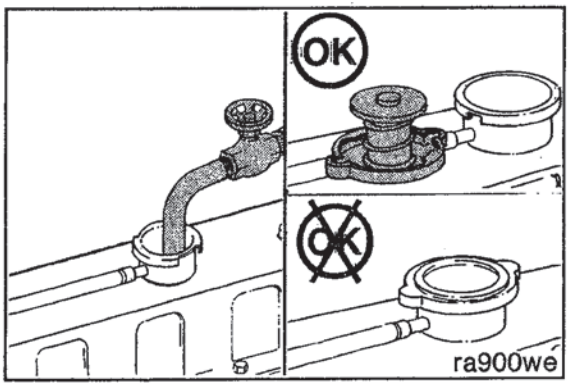


Operate the engine for 5 minutes with the coolant temperature above 80°C [176°F].

Shut the engine off, and drain the cooling system.

**NOTE:** If the water being drained is still dirty, the system **must** be flushed again until the water is clean.

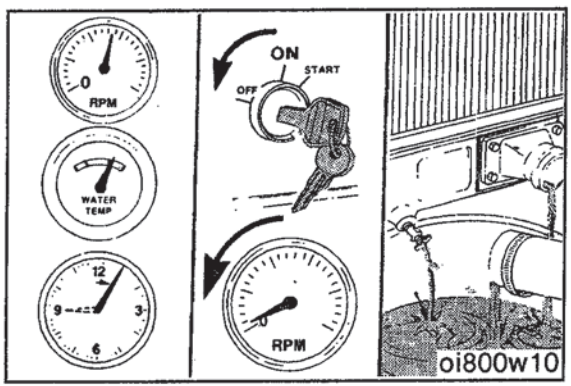

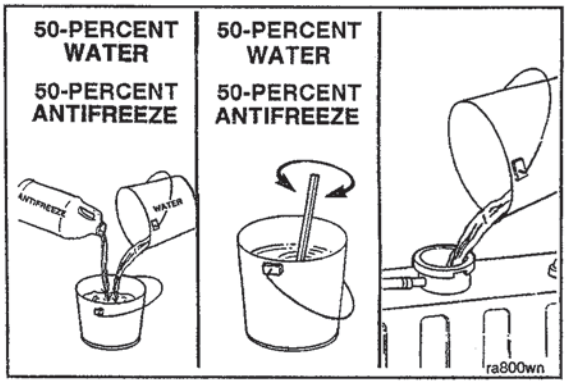


## Fill

**CAUTION**

**Never use water alone for coolant. Damage from corrosion can result.**

**NOTE:** A 50-percent mixture of antifreeze and water **must** be premixed before filling the system. The ability of antifreeze to remove heat from the engine is **not** as good as water, so pouring antifreeze into the engine first could contribute to an overheated condition before the liquids are completely mixed.

Close all drain valves and fill the system. Use a mixture of 50-percent water and 50-percent ethylene glycol antifreeze to provide freezing protection to -36°C [-33°F].

| Coolant Capacity (engine only) | | | |
|---|---|---|---|
| | liters | | U.S.qt |
| 6C8.3 | 10.1 | MAX | 10.5 |
| 6CT8.3* | 10.1 | MAX | 10.5 |
| 6CTA8.3 | 12.3 | MAX | 13.0 |

* Same capacity for charge air cooled engines.

**NOTE:** Use the amount of DCA4 corrosion inhibitor given in Section V to protect the cooling system.

**⚠ WARNING ⚠**

**Wait until the coolant temperature is below 50°C [122°F] before removing the pressure cap. Failure to do so can result in personal injury from heated coolant spray.**

**⚠ CAUTION ⚠**

**During filling, air must be vented from the engine coolant passages. Open the engine venting petcock and the petcock on the aftercooler for aftercooled engines. The system must be filled slowly to prevent air locks. Wait 2 to 3 minutes to allow air to be vented; then add coolant to bring the level to the bottom of the radiator filler neck.**

Install the pressure cap. Operate the engine until it reaches a temperature of 80°C [176°F], and check for coolant leaks and add coolant as necessary.

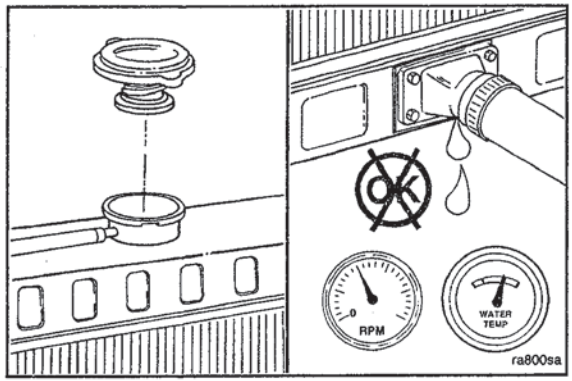

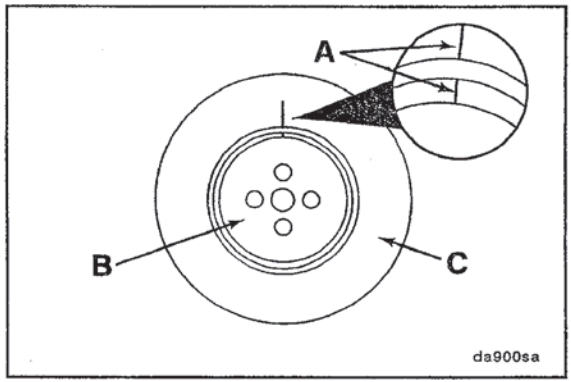


# Vibration Damper

## Inspect

Check the index lines (A) on the damper hub (B) and the inertia member (C). If the lines are more than 1.59 mm [1/16 in] out of alignment, replace the damper.

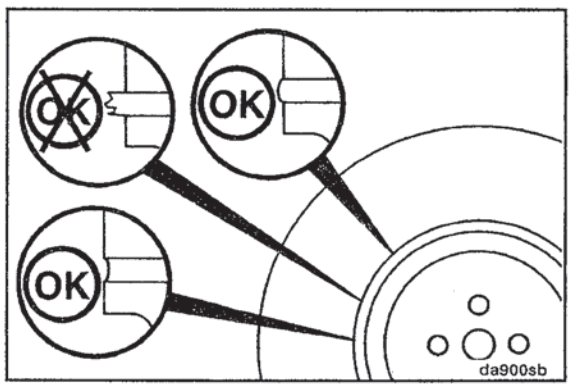


Inspect the rubber member for deterioration. If pieces of rubber are missing or if the elastic member is more than 3.18 mm [0.13 in] below the metal surface, replace the damper.

**NOTE:** Also, look for forward movement of the damper ring on the hub. Replace the damper if any movement is detected.

# Air Compressor

## Inspect

**NOTE:** All air compressors have a small amount of lubricating oil carryover that lubricates the piston rings and moving parts. When this lubricating oil is exposed to normal air compressor operating temperatures over time, lubricating oil will form varnish or carbon deposits. If the following inspections are **not** done, the air compressor piston rings will be affected by high operating temperatures and pressures and will **not** seal correctly.

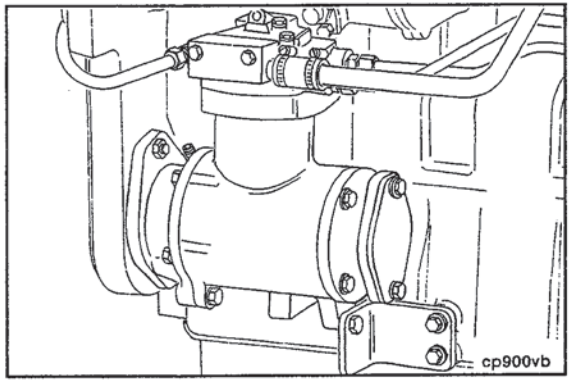


Drain the air system wet tank to release the system air pressure. Remove the air discharge line from the air compressor.

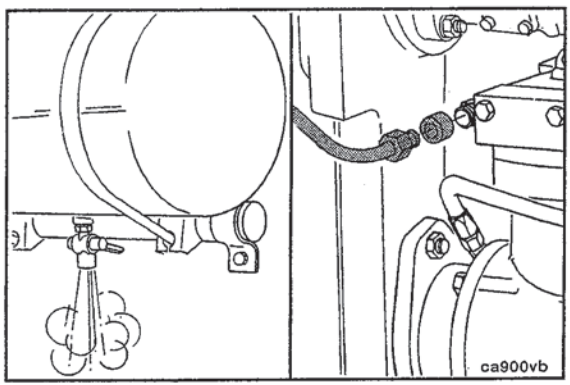

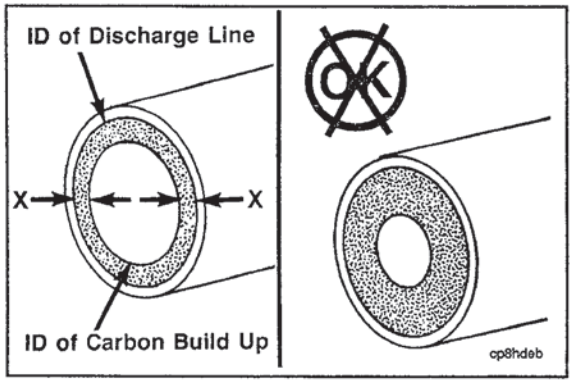


Measure the total carbon deposit thickness inside the air discharge line as shown. If the total carbon deposit (X + X) exceeds 2 mm [1/16 in], clean and inspect the cylinder head, the valve assembly, and the discharge line. Replace if necessary. Contact your Cummins Authorized Repair Location for procedures.

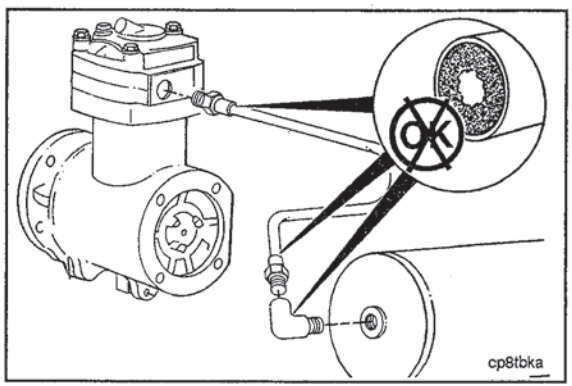


If the total carbon deposit exceeds specifications, continue checking the air discharge line connections up to the first tank until total carbon deposit is less than 2 mm [1/16 in]. Clean or replace any lines or connections that exceed this specification.

Inspect any air driers, spitter valves, pressure relief valves, and alcohol injectors for carbon deposits or malfunctioning parts. Inspect for air leaks. Maintain and repair the parts according to the manufacturer's specifications.

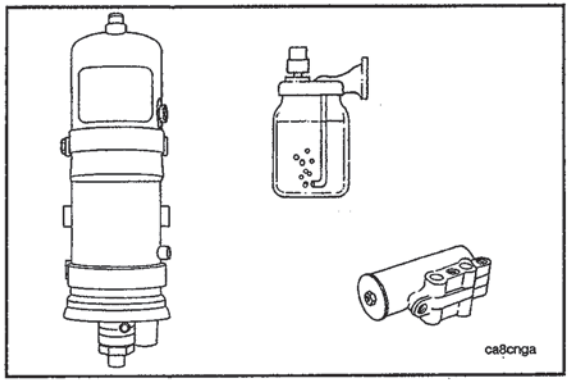

# NOTES

# Section A - Adjustment, Repair, and Replacement

## Section Contents

Page

**Adjustment, Repair and Replacement - Overview** ..... A-1
General Information ..... A-1

**Aftercooler** ..... A-68
Clean ..... A-70
Fill ..... A-71
Install ..... A-70
Preparatory ..... A-68
Remove ..... A-69

**Air Connection Pipe (Turbocharger to Turbocharger)** ..... A-66
Clean ..... A-67
Install ..... A-67
Preparatory ..... A-66
Remove ..... A-66
Vent ..... A-68

**Air Intake Manifold** ..... A-73
Pressure Test ..... A-73
Temperature Differential Test ..... A-73

**Air Intake Piping** ..... A-65
Install ..... A-65
Remove ..... A-65

**Air Intake System - Overview** ..... A-64
General Information ..... A-64

**Alternator** ..... A-99

Page

Install ..... A-100
Remove ..... A-99

**Belt Tensioner, Automatic** ..... A-4
Install ..... A-5
Preparatory ..... A-4
Remove ..... A-4

**Charge-Air Cooler (CAC)** ..... A-72
Leak Test ..... A-72
Pressure Test ..... A-72

**Coolant Thermostat** ..... A-14
Inspect for Reuse ..... A-18
Install ..... A-20
Preparatory ..... A-14
Remove ..... A-15

**Cooling System** ..... A-2
General Information ..... A-2

**Drive Belt, Cooling Fan** ..... A-3
Install ..... A-3
Remove ..... A-3

**Electrical Equipment - Overview** ..... A-96
General Information ..... A-96

**Exhaust Manifold, Dry** ..... A-83
Clean ..... A-84
Install ..... A-84
Preparatory ..... A-83
Remove ..... A-83

Page

**Fan Spacer and Pulley** ..... A-5
Install ..... A-6
Preparatory ..... A-5
Remove ..... A-6

**Fuel Filter Adapter** ..... A-28
Install ..... A-29
Preparatory ..... A-28
Remove ..... A-28

**Fuel Injection Pumps, In-Line** ..... A-46
Install ..... A-51
Preparatory ..... A-46
Remove ..... A-49

**Fuel Lift Pump** ..... A-29
Clean ..... A-31
Install ..... A-31
Preparatory ..... A-29
Remove ..... A-30

**Fuel Lines, Low Pressure** ..... A-26
Install ..... A-27
Preparatory ..... A-26
Remove ..... A-27

**Fuel Manifold (Drain)** ..... A-36
Install ..... A-37
Preparatory ..... A-36
Remove ..... A-36

**Fuel Pump** ..... A-61
Adjust ..... A-61

Page

**Fuel Shutoff Valve** ..... A-43
Install ..... A-44
Preparatory ..... A-43
Remove ..... A-44

**Fuel System - Overview** ..... A-25
General Information ..... A-25

**Injector** ..... A-37
Clean ..... A-40
Install ..... A-41
Preparatory ..... A-37
Remove ..... A-39

**Injector Supply Lines (High Pressure)** ..... A-32
Install ..... A-34
Preparatory ..... A-32
Remove ..... A-32

**Lubricating Oil Cooler** ..... A-89
Clean ..... A-89
Fill ..... A-93
Install ..... A-92
Preparatory ..... A-89
Pressure Test ..... A-91
Remove ..... A-90

**Lubricating Oil Pressure Regulator (Main Rifle)** ..... A-87
Clean ..... A-88
Install ..... A-88
Preparatory ..... A-87
Remove ..... A-87

Page

**Lubricating Oil System - Overview** ..... A-86
General Information ..... A-86

**Lubricating Oil Thermostat** ..... A-94
Clean ..... A-95
Install ..... A-95
Preparatory ..... A-94
Remove ..... A-94

**Starting Motor** ..... A-97
Install ..... A-98
Remove ..... A-97

**Turbocharger** ..... A-74
Clean ..... A-76
Install ..... A-76
Preparatory ..... A-74
Remove ..... A-74
Test ..... A-82

**Water Pump** ..... A-7
Clean ..... A-9
Fill ..... A-12
Install ..... A-10
Preparatory ..... A-7
Remove ..... A-8

THIS PAGE LEFT INTENTIONALLY BLANK

# Adjustment, Repair and Replacement - Overview

## General Information

The various repair procedures in this section have been organized by engine system. The summary statement of the steps and the tools needed for the replacement of a component, provided at the beginning of each group, will allow you to assess the size of the task quickly.

Follow the appropriate, illustrated steps to complete the repairs.

| Sockets | Wrenches | Other |
|---|---|---|
| 10 mm | 8 mm | Engine Barring Gear, Part No. 3377371 |
| 12 mm | 13 mm | Allen Wrench (8 mm) |
| 13 mm | 15 mm | Breaker Bar (3/8-in drive) |
| 15 mm | 19 mm | Flat Screwdriver |
| 17 mm | 22 mm | Ratchet (3/8-in drive) |
| 18 mm | 24 mm | Ratchet (1/2-in drive) |
| 19 mm | 17 mm (open end) | Filter Wrenches (75 to 80 mm, 90 to 95 mm, and 118 to 131 mm) |
| 22 mm | | Pliers |
| 27 mm | | Torque Wrench |
| | | T-Bar Puller (75 mm) |

# Cooling System

## General Information

**⚠ WARNING ⚠**

**Avoid prolonged and repeated skin contact with used antifreeze and wash thoroughly after contact. Keep out of reach of children. Such prolonged, repeated contact can cause skin disorders or other personal injury.**

**⚠ WARNING ⚠**

**Wait until the temperature is below 50°C [120°F] before removing the coolant system pressure cap. Failure to do so can cause personal injury from heated coolant spray.**

| Component to Be Replaced | Tools | Preparatory Steps |
|---|---|---|
| Drive belt | Breaker bar (3/8-inch sq drive) | |
| Belt tensioner | Ratchet (3/8-inch drive) 15-mm Socket and torque wrench | Remove drive belt |
| Fan hub | 10-mm socket/wrench | Remove drive belt and fan pulley |
| Water pump | 10-mm socket/wrench | Drain coolant and remove drive belt |
| Thermostat | 10-mm, 18-mm, and 19-mm Sockets/Wrenches | Drain coolant, remove drive belt, loosen alternator link, remove alternator mounting capscrew, remove thermostat housing |

# Drive Belt, Cooling Fan

## Remove

**⚠ CAUTION ⚠**

**The belt tensioner is spring-loaded and must be pivoted away from the drive belt. Pivoting in the wrong direction can result in damage to the belt tensioner.**

Lift the tensioner arm to remove pressure from the drive belt.

Remove the drive belt.

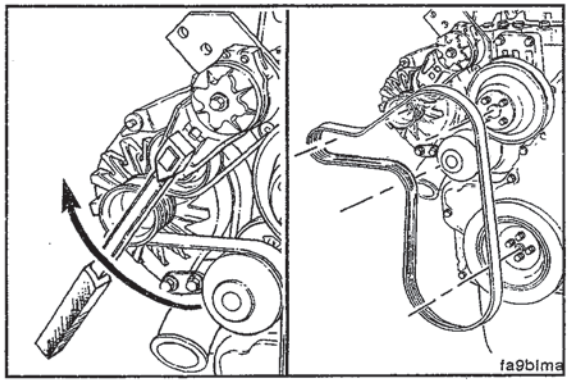


## Install

**⚠ CAUTION ⚠**

**The belt tensioner is spring-loaded and must be pivoted away from the drive belt. Pivoting in the wrong direction can result in damage to the belt tensioner.**

Lift the tensioner to install the drive belt.

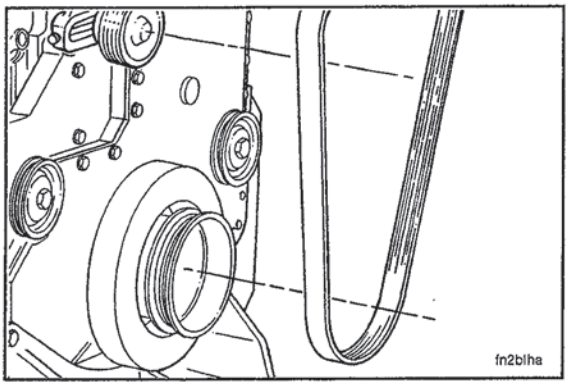

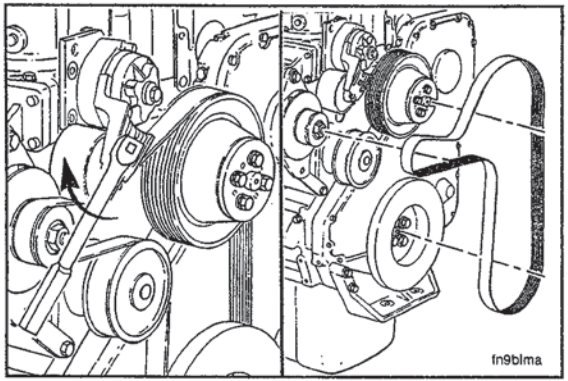


# Belt Tensioner, Automatic

## Preparatory

Remove the drive belt.

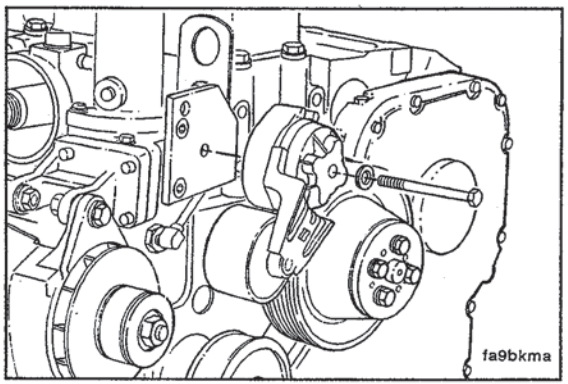


## Remove

Remove the belt tensioner from the bracket.

## Install

Install the belt tensioner.

**Torque Value:** 43 N•m [32 ft-lb]

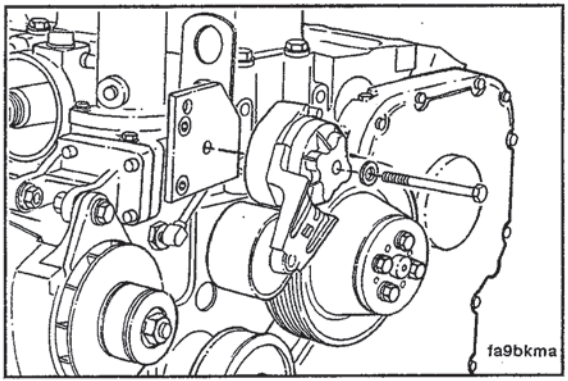


# Fan Spacer and Pulley

## Preparatory

Remove the drive belt.

**Service tip:** Loosen the capscrews before removing the belt, and tighten the capscrews after the belt is installed.

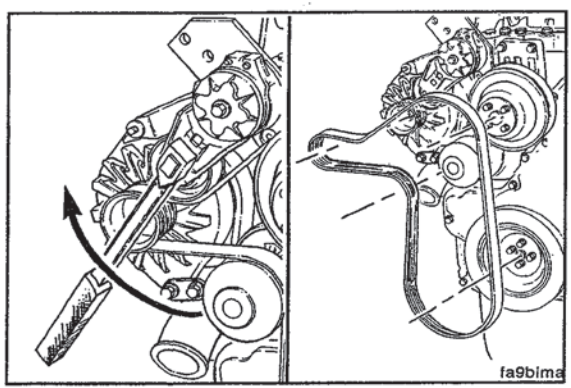

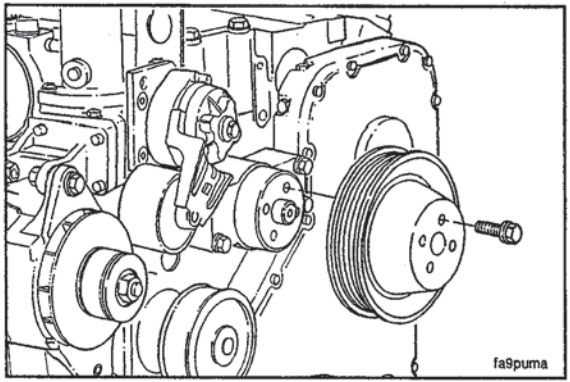


## Remove

Remove the four capscrews, fan, and spacer.

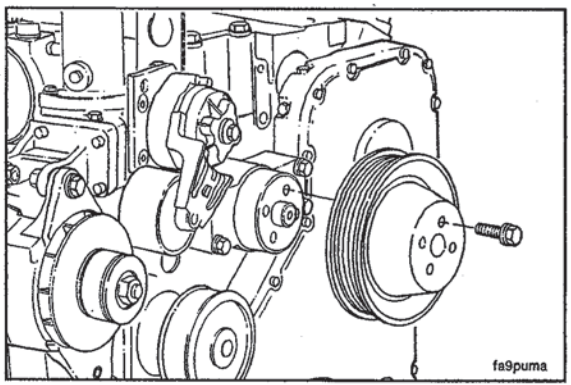


## Install

Install the spacer, fan, and capscrews.

Tighten the capscrews.

**Torque Value:** 24 N•m [18 ft-lb]

# Water Pump

## Preparatory

**⚠ WARNING ⚠**

**Coolant is toxic. Keep away from children and pets. If not reused, dispose of in accordance with local environmental regulations.**

Drain the coolant.

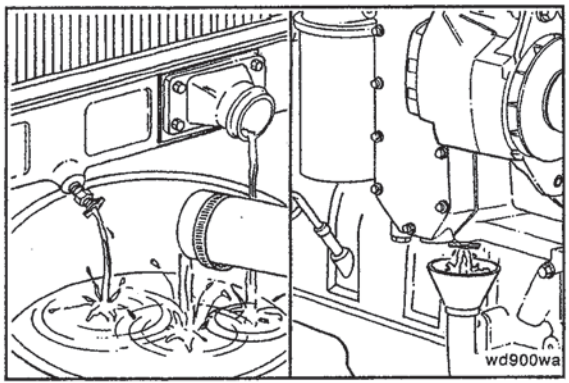


Remove the drive belt.



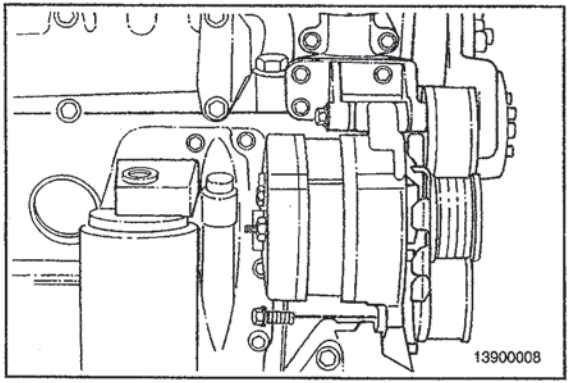


## Remove

Remove the alternator link.

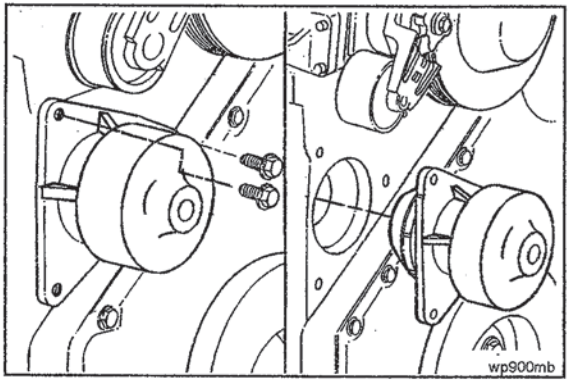


Remove the water pump mounting capscrews.

Remove the water pump.

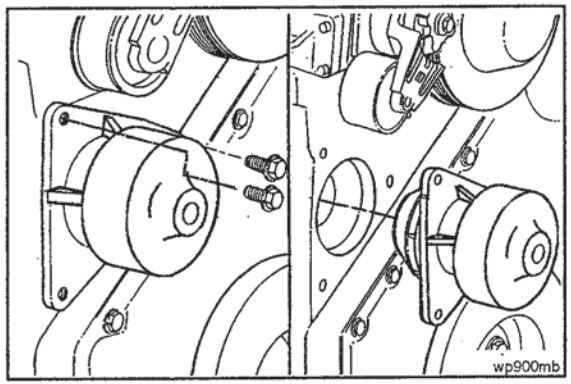


## Clean

Clean the sealing surface on the cylinder block.

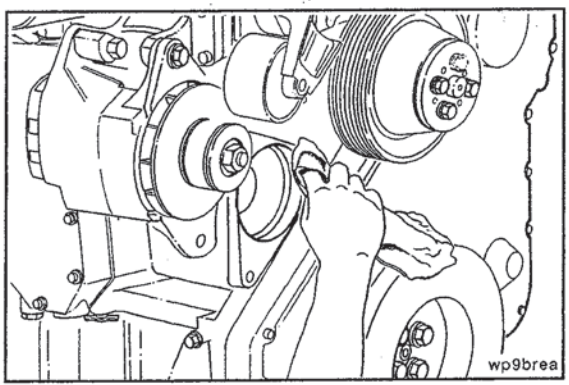

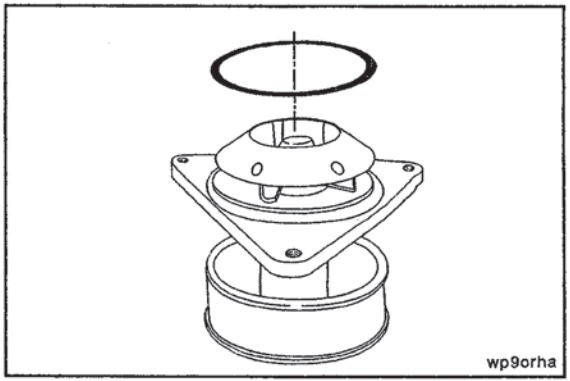


## Install

Install a new o-ring into the groove in the water pump.

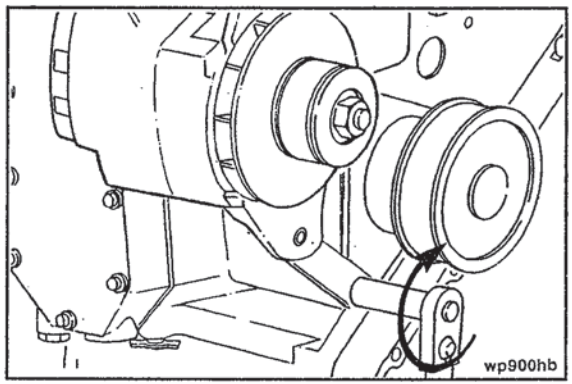


Install the water pump and water pump mounting capscrews.

Tighten the water pump mounting capscrews.

**Torque Value:** 24 N•m [212 in-lb]

Install and tighten the alternator link.

**Torque Value:** 43 N•m [32 ft-lb]

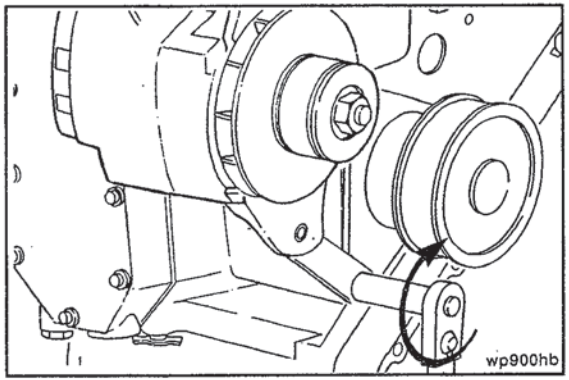


Install the drive belt.

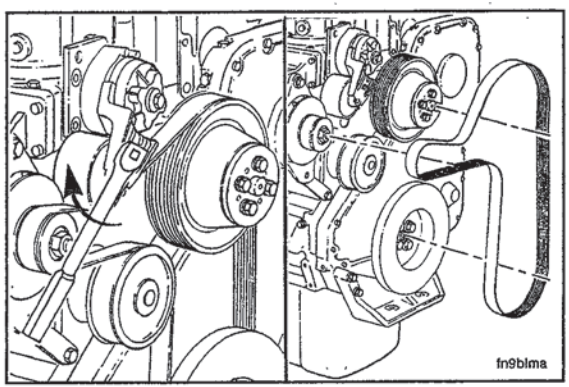

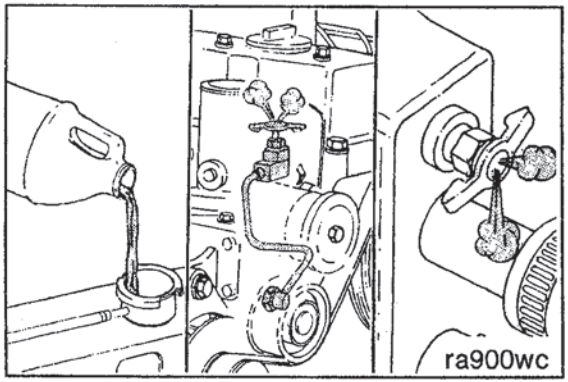


## Fill

During filling, air **must** be vented from the engine coolant passages. Open the engine vent petcock if equipped. Also, be sure to open the petcock on the aftercooler for after-cooled engines.

**NOTE:** Venting will permit a fill rate of 19 liters/min. [5 gal/min.].

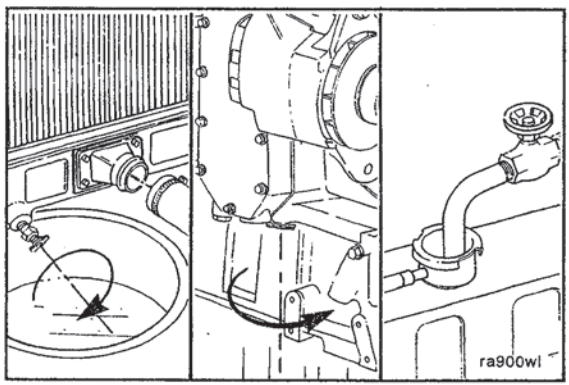


Close the drain valves.

Install all hoses previously removed.

Fill the cooling system with a premixture of 50-percent water and 50-percent ethylene-glycol antifreeze; refer to Section V.

**NOTE:** The ability of antifreeze to remove heat from the engine is **not** as good as water; pouring antifreeze into the engine first can contribute to an overheated condition before the liquids are completely mixed.

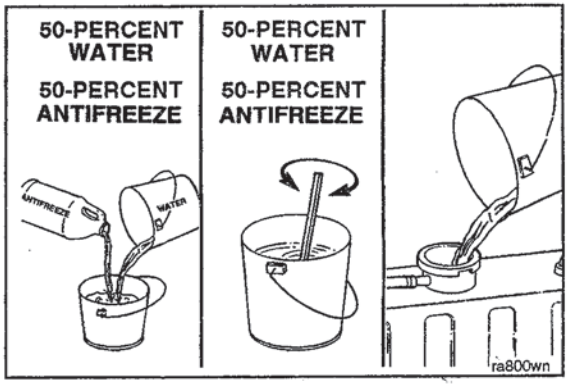


Install the pressure cap.

Operate the engine until it reaches a temperature of 80°C [176°F], and inspect for coolant leaks.

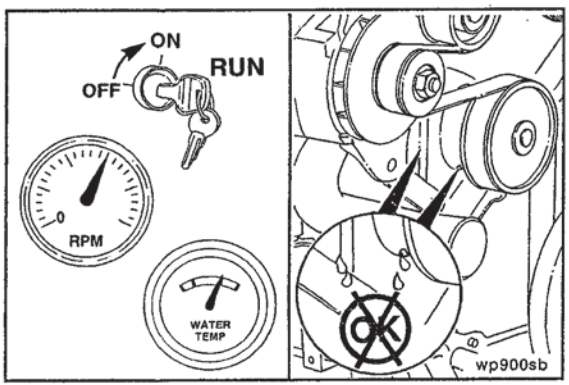

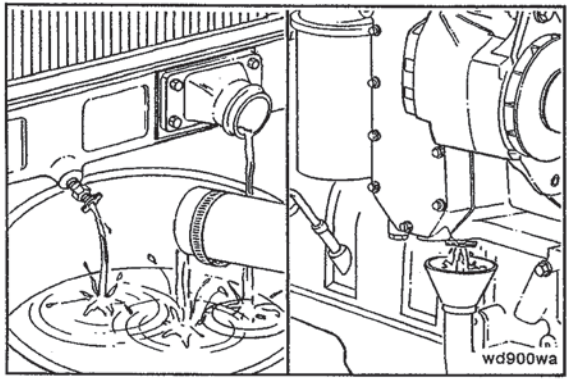


# Coolant Thermostat

## Preparatory

**⚠ WARNING ⚠**

**Coolant is toxic. Keep away from children and pets. If not reused, dispose of in accordance with local environmental regulations.**

Drain 2 liters [2.1 qt] of coolant.

Remove the upper radiator hose from the outlet connection.

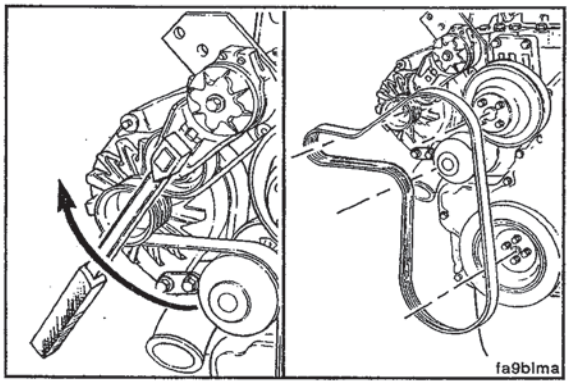


Remove the drive belt.

## Remove

Loosen the alternator link capscrew.

Loosen the alternator tail support capscrew, if equipped.

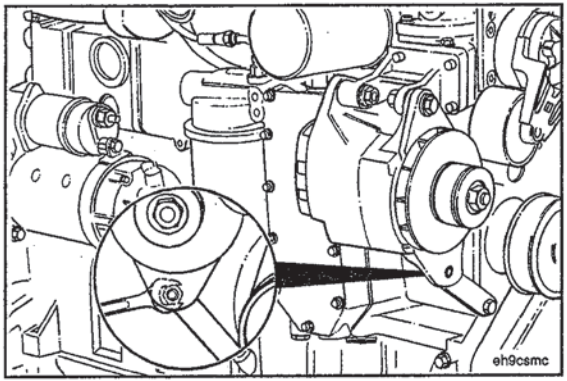


Remove the alternator mounting bolts and nuts.

Lower the alternator.

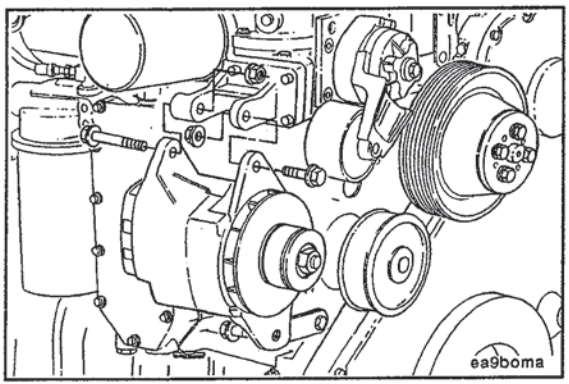

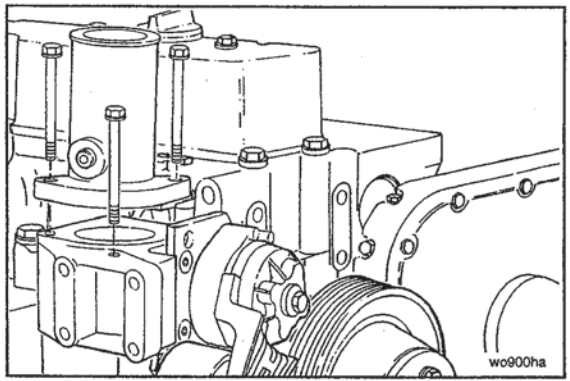


Remove the capscrews from the thermostat housing.

Remove the water outlet connection.

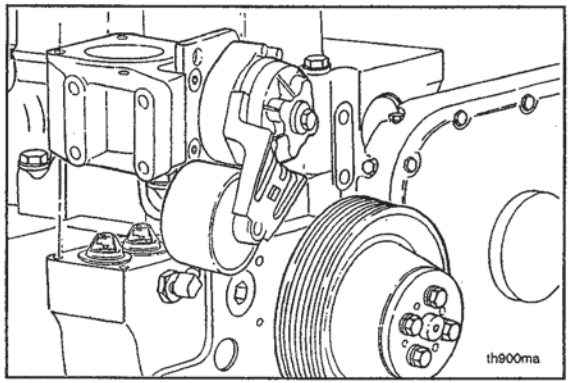


Remove the thermostat housing and belt tensioner assembly.

**NOTE:** If the vehicle is equipped with an external bypass system, the thermostat housing support (between the thermostat housing and cylinder block) **must** be removed.

**⚠ CAUTION ⚠**

**Debris in the cooling system can cause damage to the engine.**

Remove the thermostat gasket and clean the gasket surface.

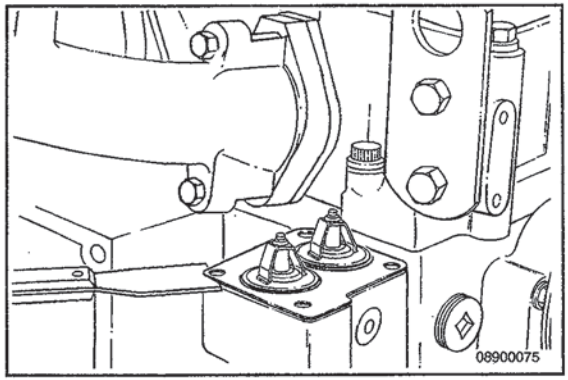


**⚠ CAUTION ⚠**

**Do not shim the thermostats beyond the top of the block.**

Measure the distance from the thermostat flange to the top of the block surface of each thermostat to determine the proper shim(s) to use.

**NOTE:** The service shims included are 0.25 mm [0.010 in], 0.50 mm [0.020 in], 0.75 mm [0.030 in], and 1 mm [0.040 in].

Select the appropriate combination that will bring the thermostat height as close to the top of the block as possible.

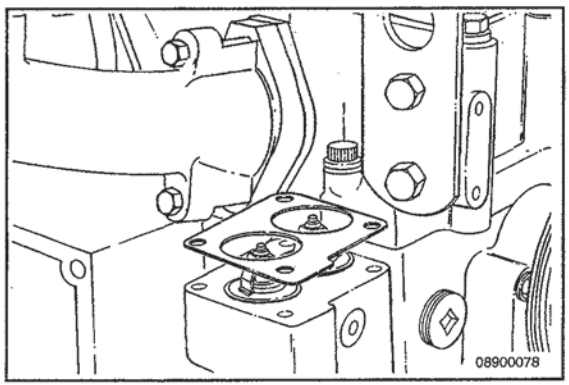

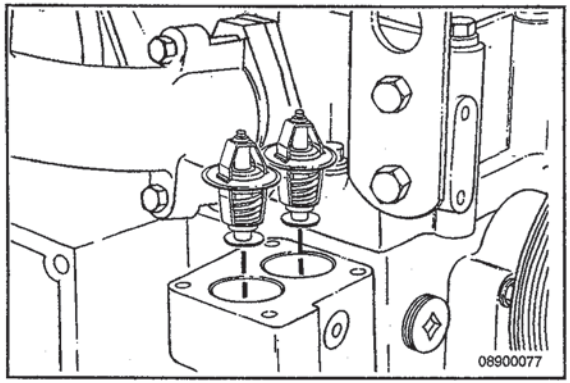


**NOTE:** Any combination of shims can be used, but stacking is limited to a maximum of two shims per bore.

Remove each thermostat and insert the selected shims into each bore, making sure each shim is seated properly in the bore.

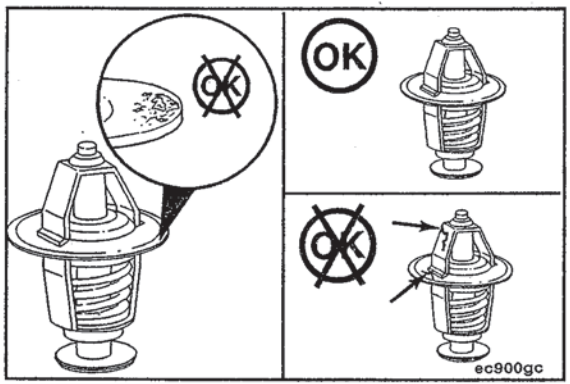


## Inspect for Reuse

Inspect the thermostats for damage.

Make sure both thermostats are clean and free from corrosion.

Suspend the thermostats and a 100°C [212°F] thermometer in a container of water.

**NOTE:** Do **not** allow the thermostats or thermometer to touch the container.

Heat the water slowly so the wax element in the thermostats has sufficient time to react to the rising water temperature.

**NOTE:** The normal operating temperature is stamped on the thermostat.

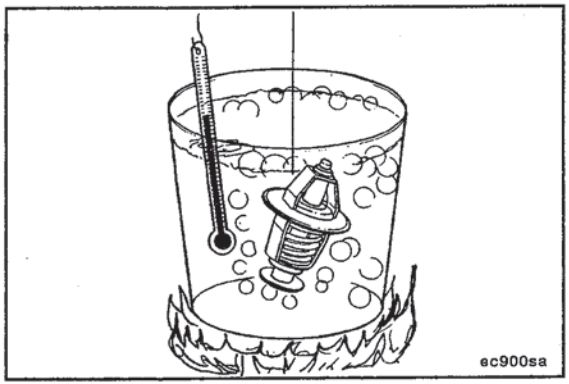


Inspect the thermostats as follows:

- Thermostat **must** begin to open within 1°C [2°F] of 82°C [180°F].
- Thermostat **must** be fully open within 1°C [2°F] of 95°C [203°F].

**NOTE:** The fully open clearance between the thermostat flow valve and flange **must** be 41.5 mm [1.63 in] minimum.

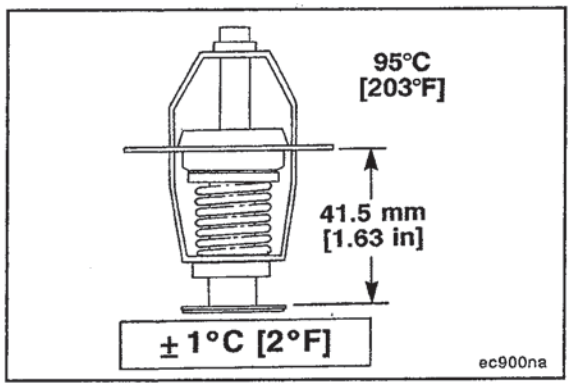

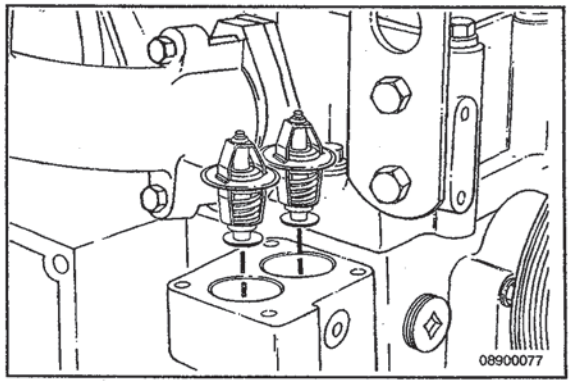


## Install

Install the thermostats on top of the service shim(s) in the thermostat flanges. They can be within 0.23 mm [0.009 in] of flush with the top of the block, without being above the top of the block.

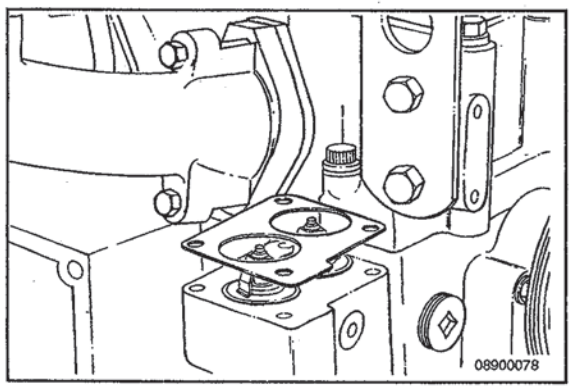


Install a new thermostat gasket.

Position the thermostat housing and belt tensioner over the thermostats and gasket.

**NOTE:** If an external bypass system is used, the thermostat housing support (between the thermostat housing and cylinder block) **must** be installed.

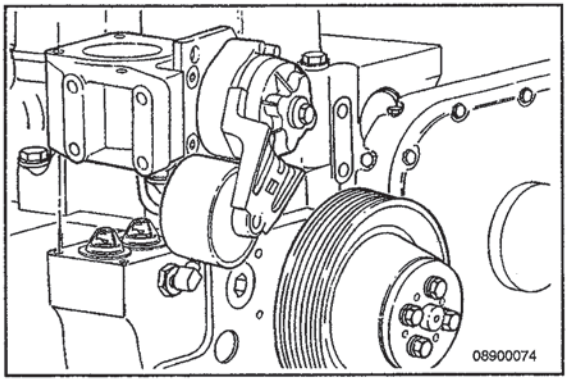


Make sure the gasket is aligned with the capscrew holes.

Install the capscrews and finger-tighten.

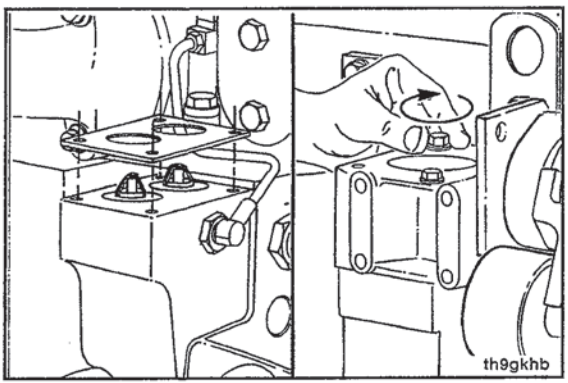

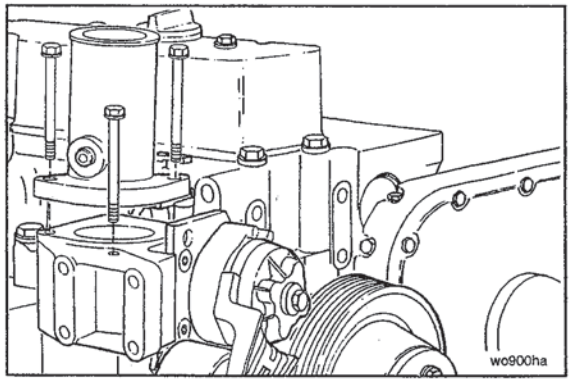


Install the water outlet connection.

Tighten all capscrews.

**Torque Value:** 24 N•m [212 in-lb]

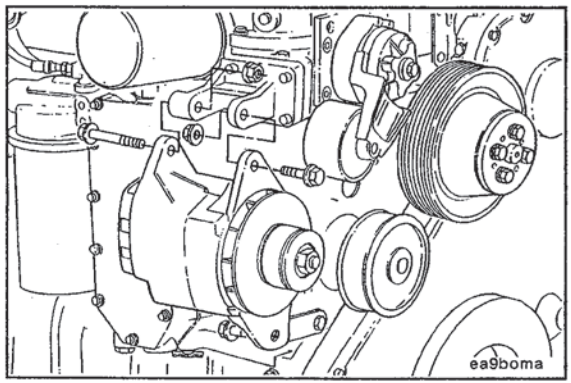


Position the alternator and install the mounting bolts and nuts.

**Torque Value:**

| | | |
|---|---|---|
| Alternator Mounting | 77 N•m | [57 ft-lb] |
| Alternator Link | 43 N•m | [32 ft-lb] |

Install the drive belt.

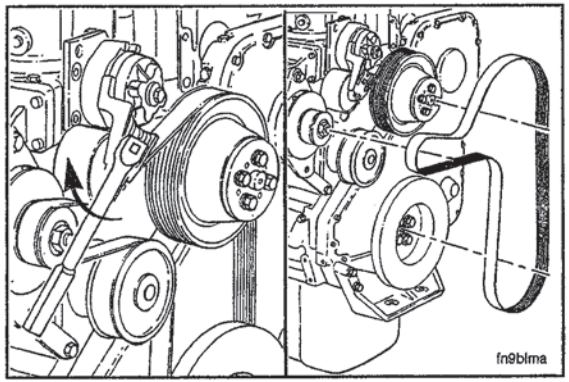


**⚠ WARNING ⚠**

**Batteries can emit explosive gases. To avoid personal injury, always ventilate the compartment before servicing the batteries. To avoid arcing, remove the negative (–) battery cable first and attach the negative (–) battery cable last.**

Install and tighten the battery's electrical connections.

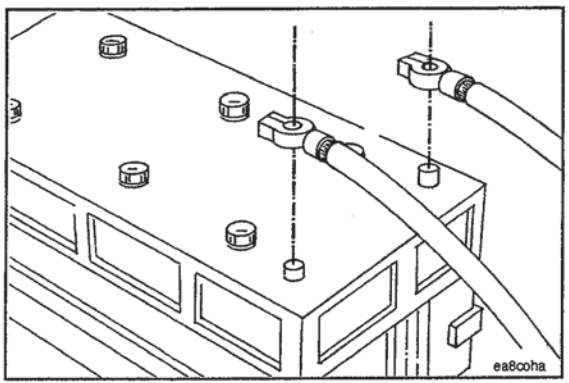

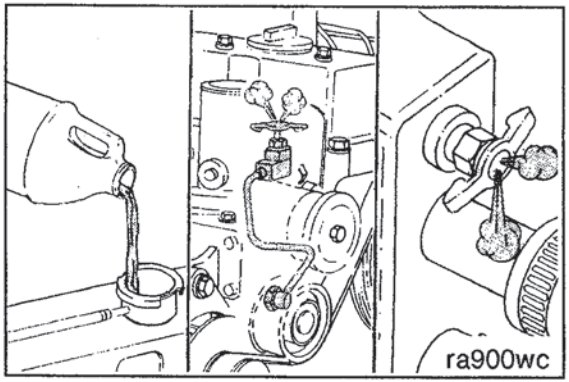


**NOTE:** During filling, air **must** be vented from the engine's coolant passages. Open the engine vent petcock, if equipped. Make sure to open the petcock on the after-cooler for aftercooled engines. The system **must** be filled slowly to prevent air locks. Wait 2 to 3 minutes to allow air to be vented; then add coolant to bring the level to the bottom of the radiator filler neck.

Fill the cooling system.

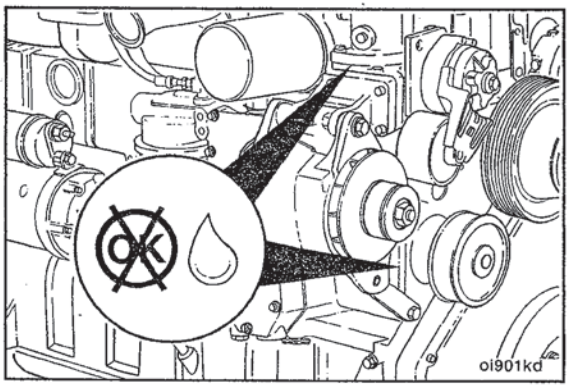


Operate the engine to normal operating temperature and check for leaks.

# Fuel System - Overview

## General Information

The function of the fuel system is to inject a metered quantity of clean atomized fuel into the engine cylinders at a precise time near the end of the compression stroke. The components of the fuel system contribute to the delivery of fuel to the cylinders.

1. Fuel injection pump
2. High-pressure fuel lines
3. Injectors.

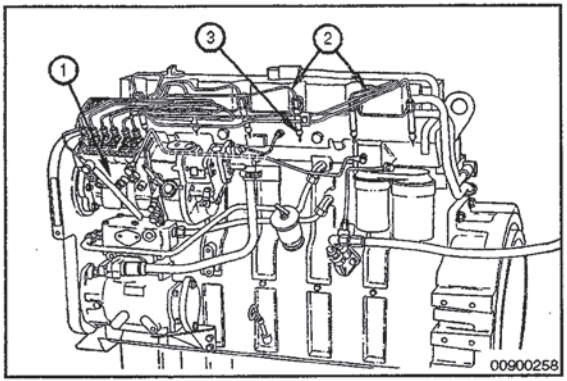


1. Fuel injection pump
2. Fuel supply line
3. Fuel filter
4. Fuel transfer pump
5. Fuel tank (**not** shown)
6. Fuel return line.

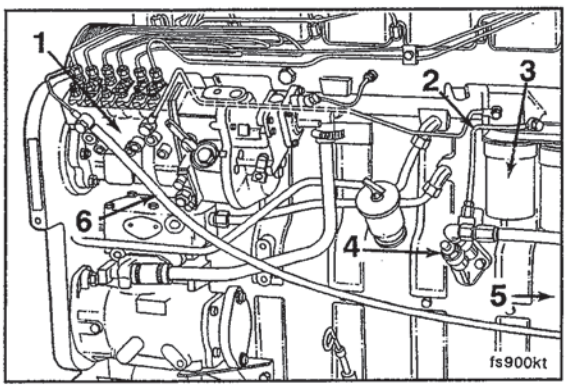

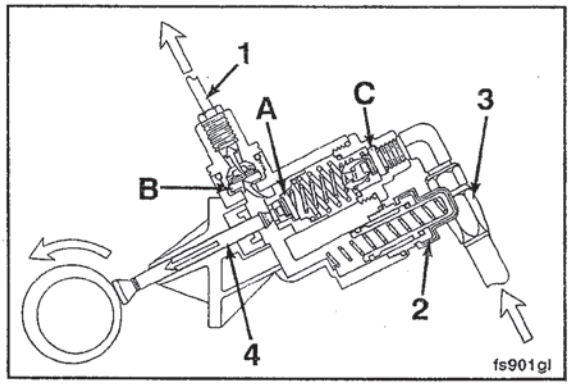


The fuel transfer pump is mechanically driven by a plunger running against a special lobe on the camshaft. The fuel transfer pump contains a pumping piston (A) and check valves (B) (C) to control the flow of fuel and bleed back during engine shutdown.

1. Low-pressure supply line
2. Priming pump
3. Fuel inlet line
4. Piston.

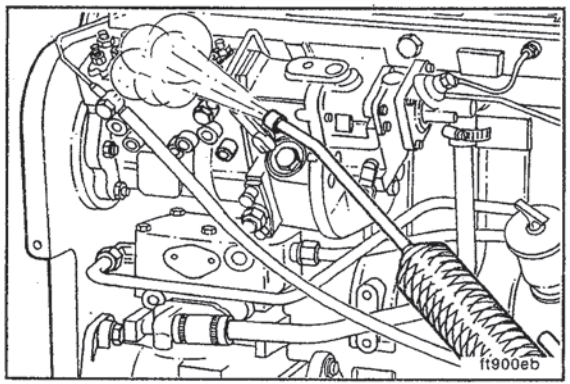


# Fuel Lines, Low Pressure

## Preparatory

Clean any debris from the fittings.

**NOTE:** Thoroughly clean all fittings and components before removal. Make sure that the debris, water steam, or cleaning solution does **not** get inside the fuel system.

## Remove

Remove the fuel line from the fuel transfer pump, and fuel filter head.

Use two wrenches to disconnect from fuel transfer pump.

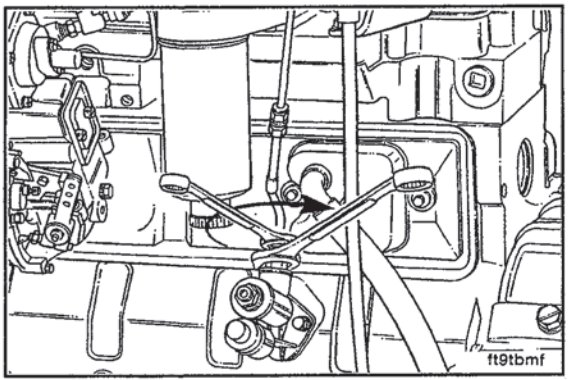


## Install

**⚠ CAUTION ⚠**

**Do not overtighten the fuel supply line fittings. Failure to do so can cause a fuel leak.**

Install the fuel line between the fuel lift pump and the fuel filter head. Use two wrenches to tighten the connection on the fuel lift pump.

**Torque Value:** 24 N•m [212 in-lb]

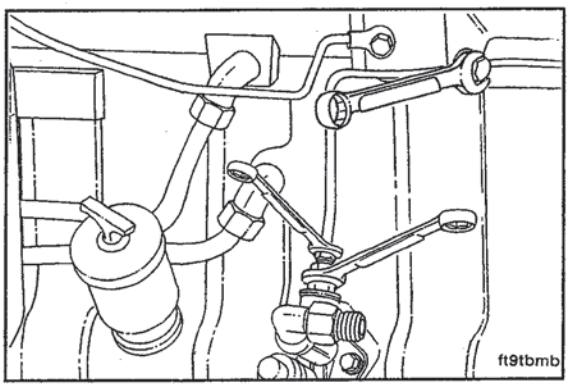

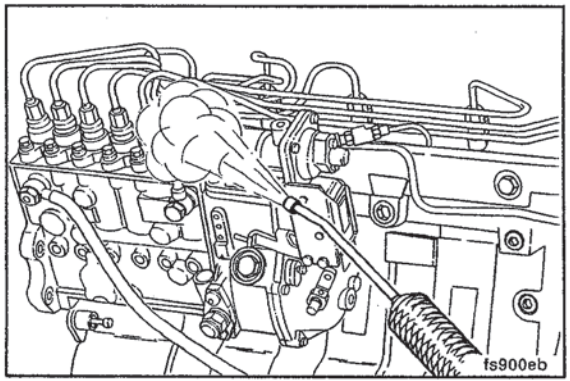


# Fuel Filter Adapter

## Preparatory

Clean debris.

Remove fuel filters.

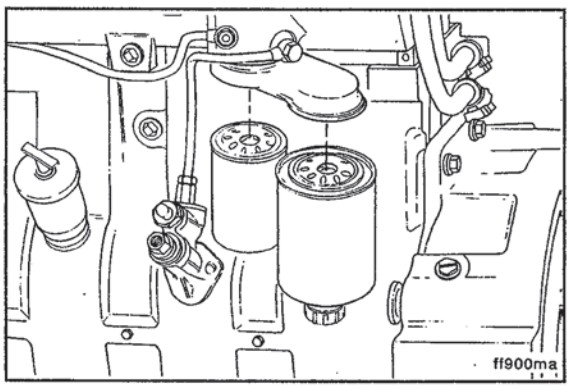


## Remove

Remove the retaining nut, fuel filter head adapter, and sealing washers.

## Install

Install in the reverse order of removal.

**Torque Value:** 32 N•m [24 ft-lb]

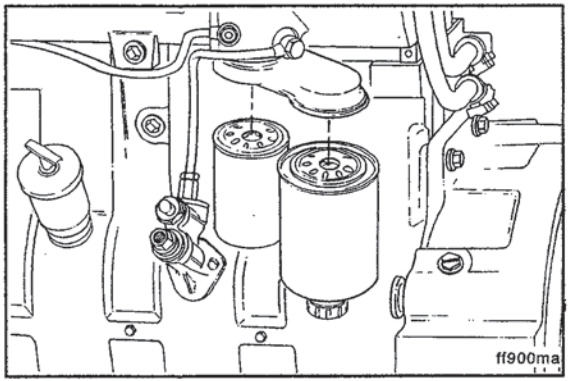


# Fuel Lift Pump

## Preparatory

Clean all debris from the fuel lift pump.

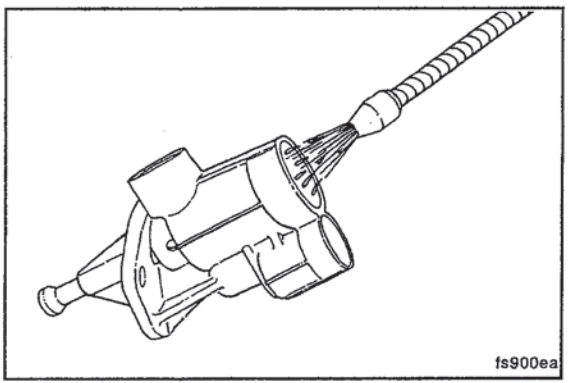

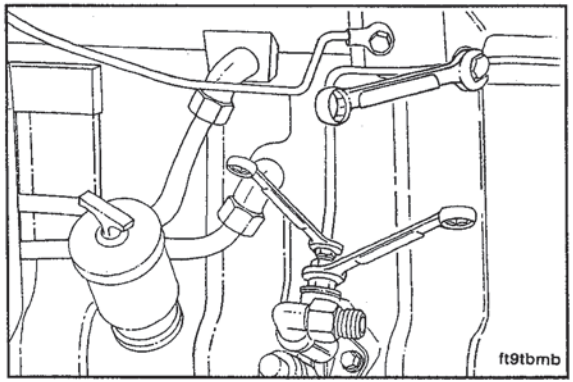


Disconnect the fuel supply lines.

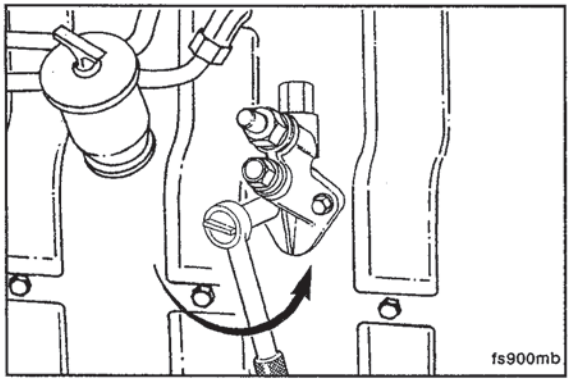


## Remove

Remove the two fuel lift pump mounting capscrews.

Remove the fuel lift pump.

## Clean

Clean the fuel transfer pump mounting surface on the cylinder block.

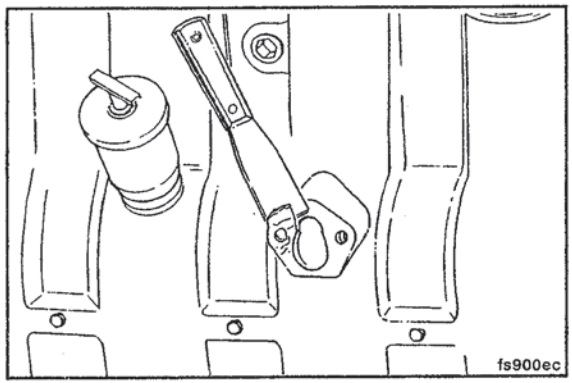


## Install

**⚠ CAUTION ⚠**

**Failure to tighten the fuel transfer pump mounting cap-screws alternately can result in broken lift pump flanges.**

Install a new fuel transfer pump gasket.

Alternately tighten the mounting bolts.

**Torque Value:** 24 N•m [212 in-lb]

Connect the fuel lines.

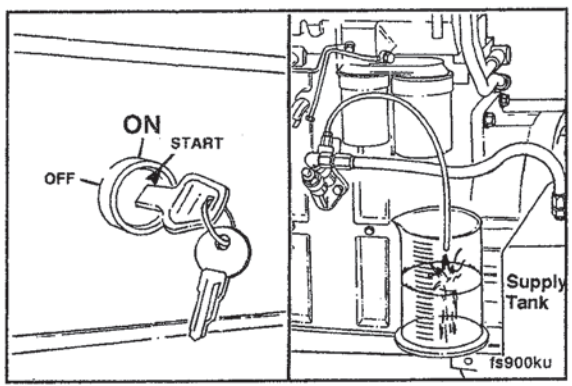

# Injector Supply Lines (High Pressure)

## Preparatory

Clean debris from fuel lines.

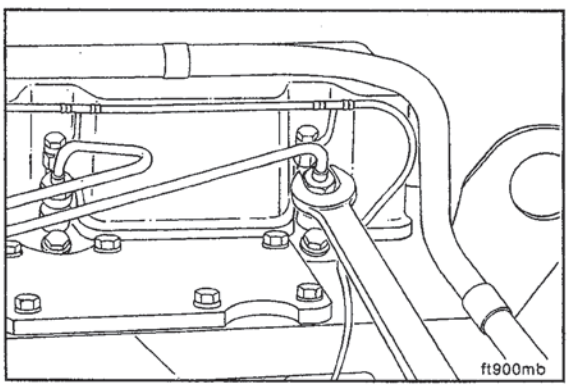


## Remove

**NOTE:** If individual lines are to be replaced, remove the vibration isolators from the set of lines containing the line to be replaced.

Disconnect the line(s) from the injector(s). Be sure to protect injector inlet from debris.

Disconnect the line(s) from the fuel injection pump. Be sure to protect the delivery valves from debris.

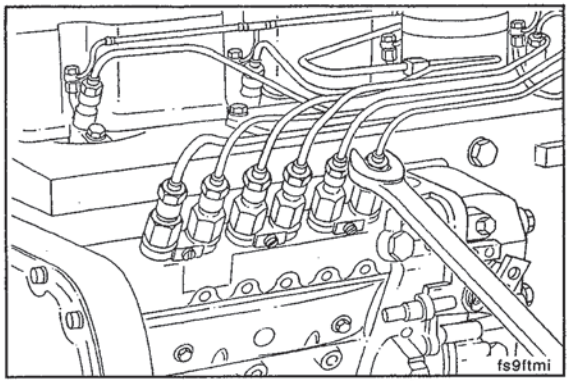


**⚠ CAUTION ⚠**

**The high-pressure fuel lines will be damaged if they are not clamped securely and routed so they do not contact each other or any other component.**

The high-pressure fuel lines are designed and manufactured to deliver fuel at injection pressure to the injectors. The high-pressure pulses cause the lines to expand and contract during the injection cycle.

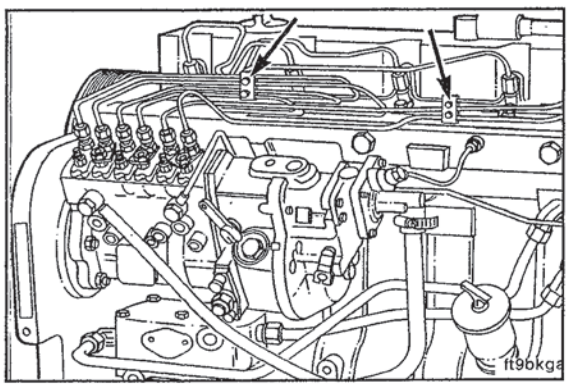

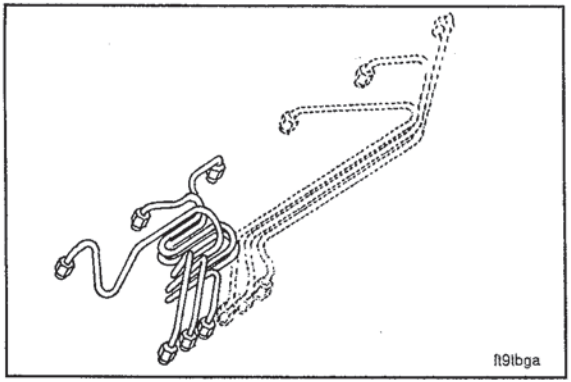


**⚠ CAUTION ⚠**

**Do not weld or substitute lines; use only the specified part number for the engine.**

The length, internal size, and rigidity of the lines are critical for smooth engine operation. An attached metal tag is used to identify each line with a part number.

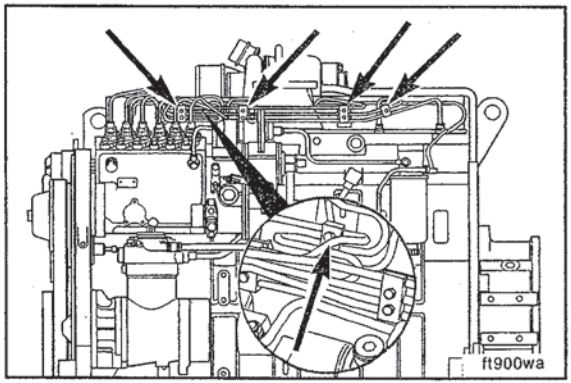


## Install

Loosen the vibration isolator capscrews so the fuel lines can be easily moved.

**NOTE:** To prevent breakage to the high-pressure fuel lines, they **must** be connected to the injector and the fuel injection pump in a free state, without forcing the connecting nuts. The fuel lines are properly sized for specific application.

**NOTE:** If removed, install the support clamps in their original positions and make sure the high-pressure fuel lines do **not** contact each other or other components.

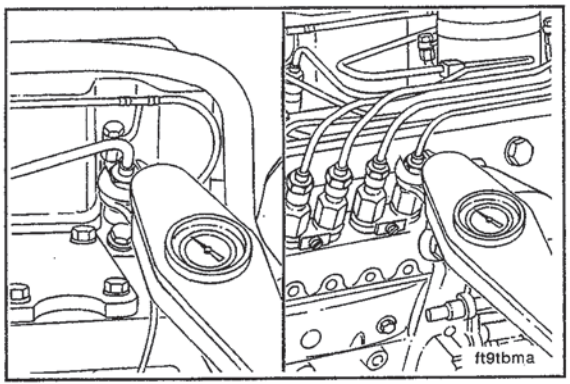


Tighten all fittings and mounting hardware.

**Torque Value:**

| | |
|---|---|
| Fuel Line Connections | 24 N•m [212 in-lb]. |
| Support Bracket Capscrews | 24 N•m [212 in-lb]. |
| Vibration Isolator Capscrews | 6 N•m [53 in-lb]. |

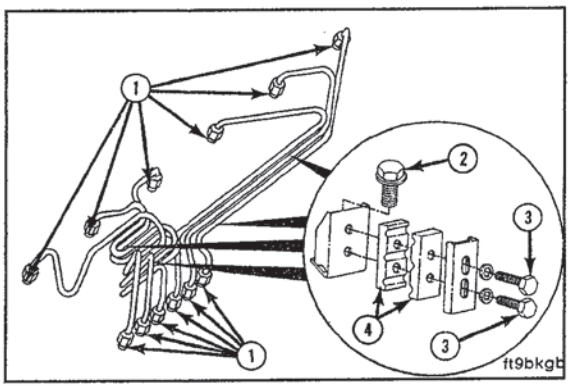

# Fuel Manifold (Drain)

## Preparatory

Clean all debris from around the fuel drain manifold.

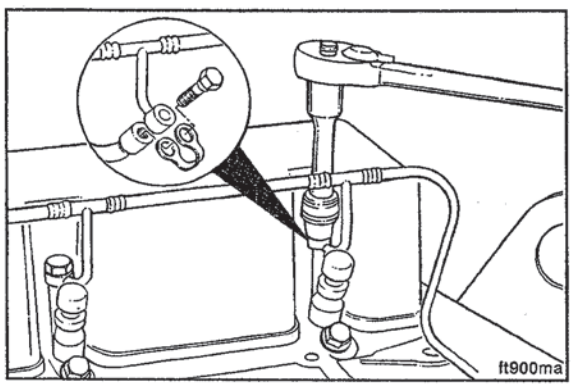


## Remove

Remove the banjo capscrews from the injectors and fuel filter head.

## Install

Install the fuel drain manifold in the reverse order of removal.

**Torque Value:**

| | |
|---|---|
| Filter Head Banjo | 15 N•m [133 in-lb]. |
| Injector Banjo | 9 N•m [80 in-lb]. |

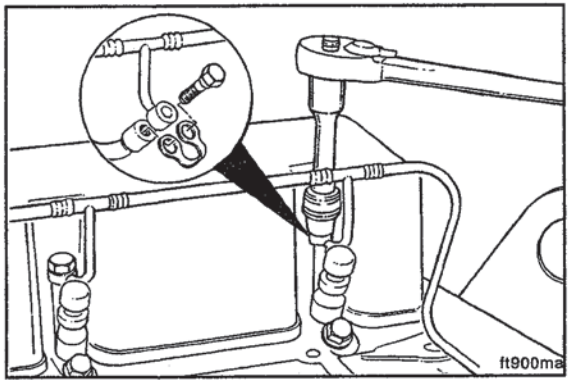


# Injector

## Preparatory

Thoroughly clean around the injectors.

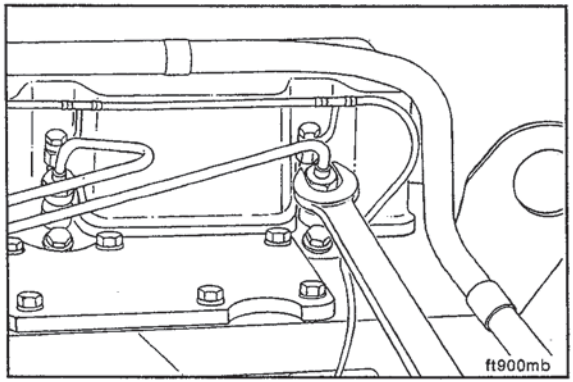


Disconnect the high-pressure injector supply lines.

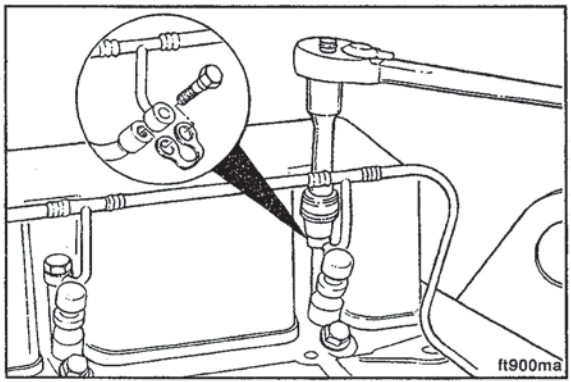


Disconnect the fuel drain manifold.

## Remove

Remove the injector hold-down clamp.

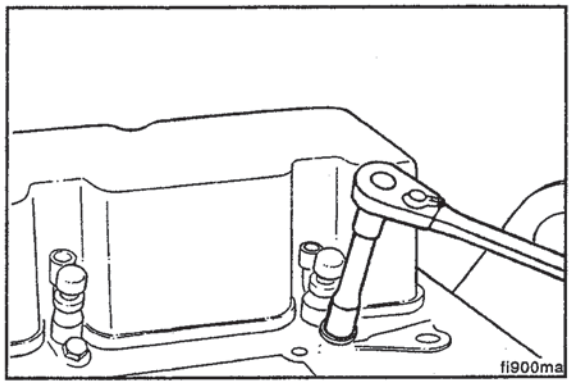


**NOTE:** Use **injector puller, Part No. 3823276**, to remove the injectors.

Remove the injectors.

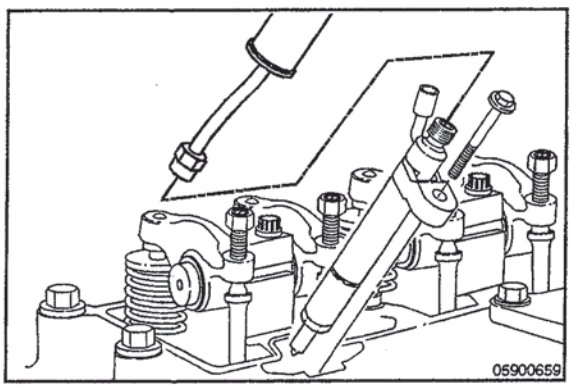

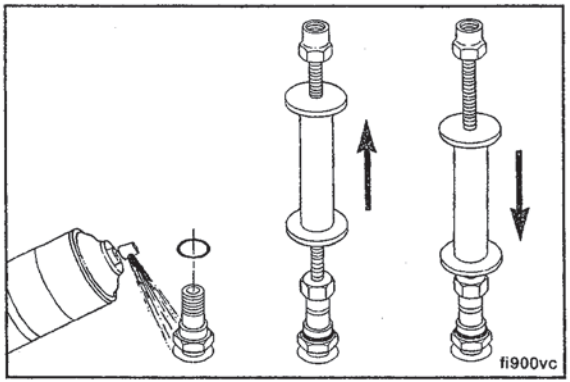


To remove some injectors, it will be necessary to:

- Tap the injector with the injector puller
- Work the injector up and down.

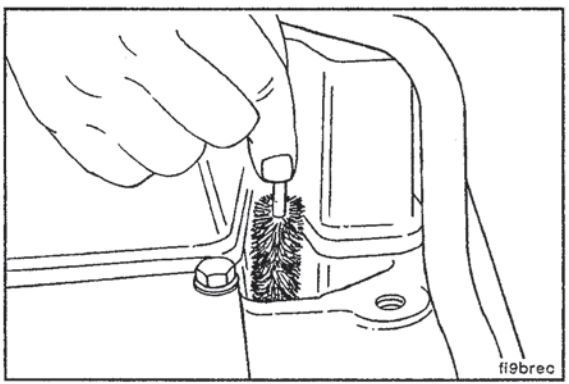


## Clean

**Injector Bore Brush, Part No. 3822510**

Clean the injector nozzle bore.

## Install

Lubricate the sealing surface of the injector sleeve with an anti-seize compound. Assemble the injector, injector sleeve, a new copper sealing washer, and the hold-down clamp. Use **only** one washer.

**Service Tool:** A light coat of clean lubricating engine oil between the washer and injector can help keep the washer from falling during installation.

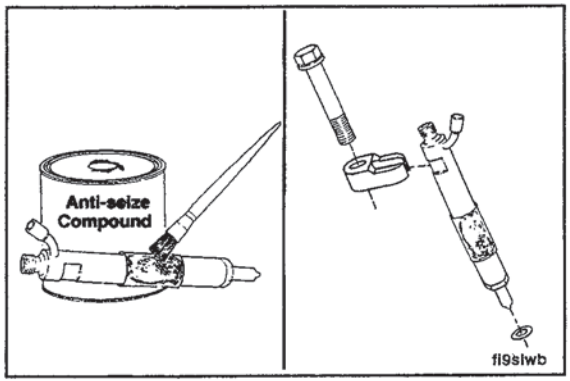


Install the injector, injector sleeve, copper sealing washer, and hold-down clamp into the injector bore. The injector fuel return connection **must** be toward the valve cover.

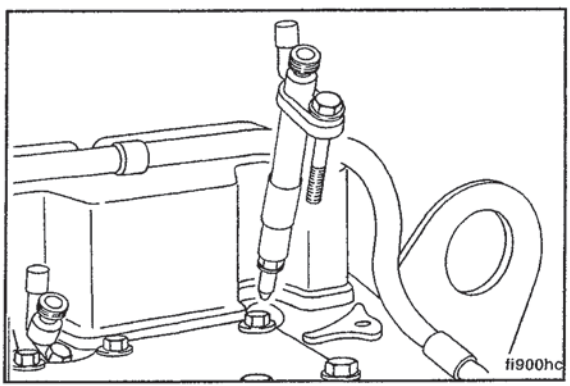

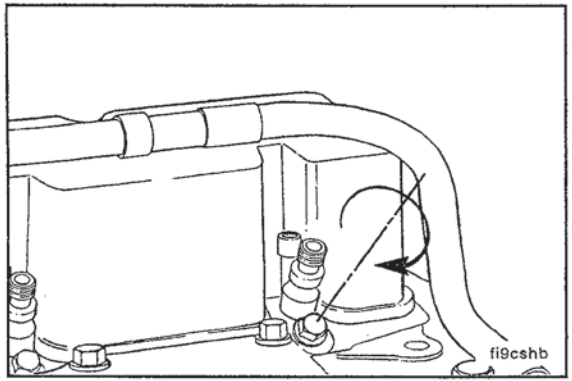


Install the injector hold-down capscrew.

**Torque Value:** 24 N•m [212 in-lb]

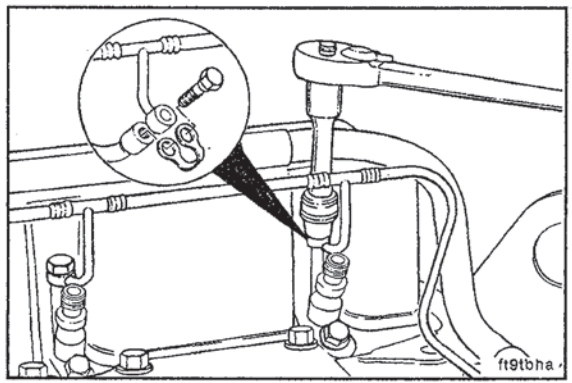


Install the fuel drain manifold.

**Torque Value:** 9 N•m [80 in-lb]

Install the high-pressure fuel lines.

**Torque Value.**

| | |
|---|---|
| 17 mm | 24 N•m [212 in-lb]. |
| 19 mm | 30 N•m [22 ft-lb]. |

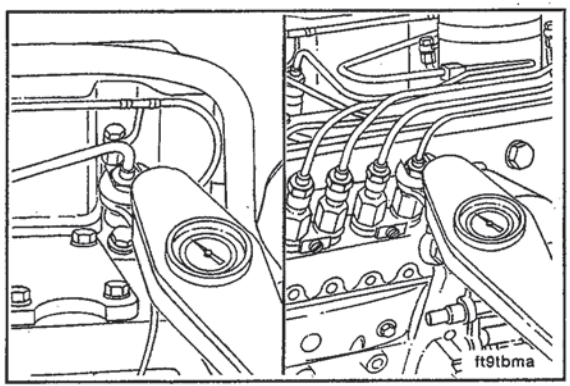


# Fuel Shutoff Valve

## Preparatory

Label and disconnect the wiring.

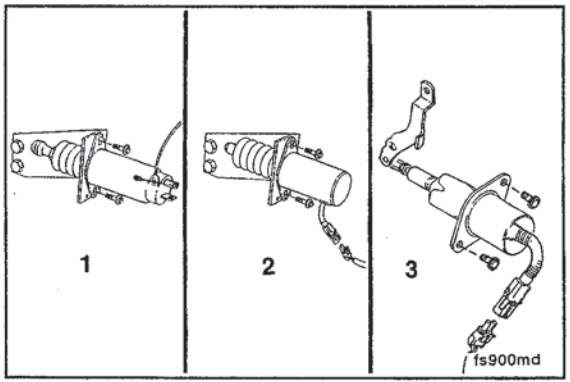


## Remove

Remove the two mounting capscrews, and remove the solenoid from the bracket.

1. Synchro-start
2. Trombetta
3. Direct link.

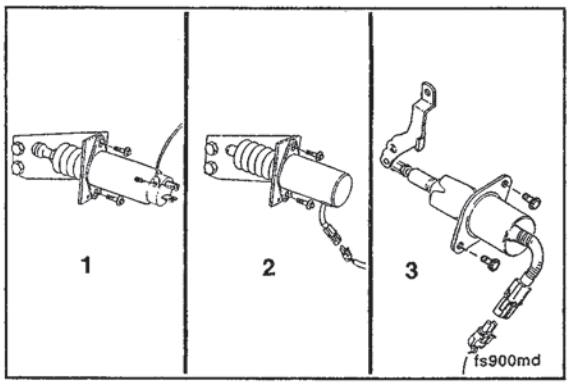


## Install

**NOTE:** Make sure the acorn nut is tightened to be snugly on the fuel shutoff solenoid shaft (Synchro-start **only**).

Install the new fuel shutoff solenoid to the bracket, and connect the wires. Make sure the wiring harness one the Trombetta solenoid is installed in the six-o'clock position.

**Torque Value:** 10 N•m [89 in-lb]

1. Synchro-start
2. Trombetta
3. Direct link.

Activate the switch and check the plunger travel.

| | Synchro-start | Trombetta | Direct link |
|---|---|---|---|
| **A =** | 86.8 mm [3.4 in] | 91.4 mm [3.6 in] | |
| **B =** | 60.2 mm [2.4 in] | 63.5 mm [2.5 in] | 117.1 mm [4.61 in] |

The plunger **must** be retracted when the fuel shutoff solenoid is activated to the RUN position B. The fuel shutoff solenoid **must** operate without binding.

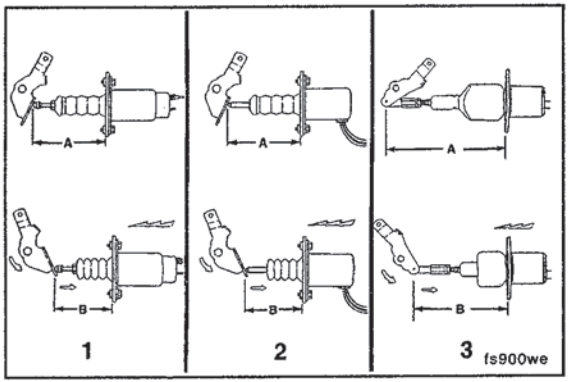


Remove the hitch pin clip, the mounting capscrews, and the fuel shutoff solenoid.

Install the new solenoid in reverse order of removal, and connect the wires.

**Torque Value:** 10 N•m [89 in-lb]

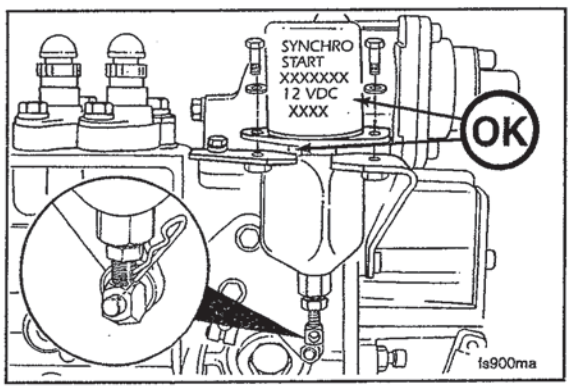

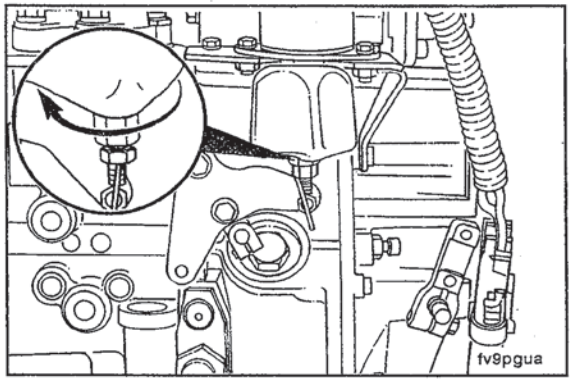


Adjust the solenoid linkage as necessary so that the plunger is magnetically held in with the shutoff lever in the absolute full-run position. Turn the large hex nut on the end of the plunger to make adjustments, and secure in place with a locknut.

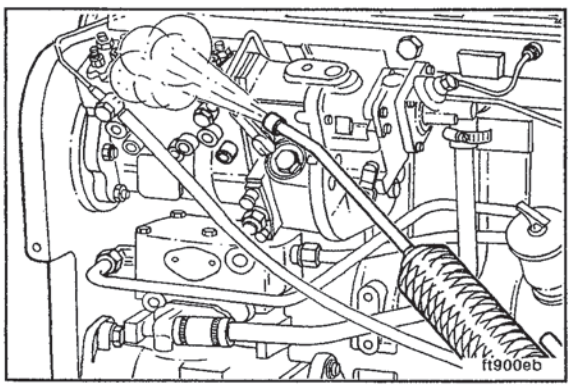


# Fuel Injection Pumps, In-Line

## Preparatory

Clean any debris from the fuel injection pump.

Remove the fuel supply lines.

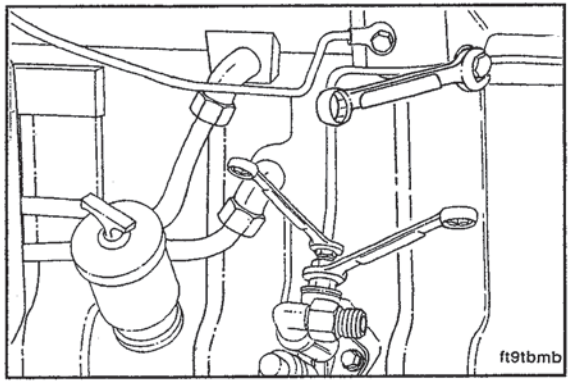


Remove the injector supply lines.

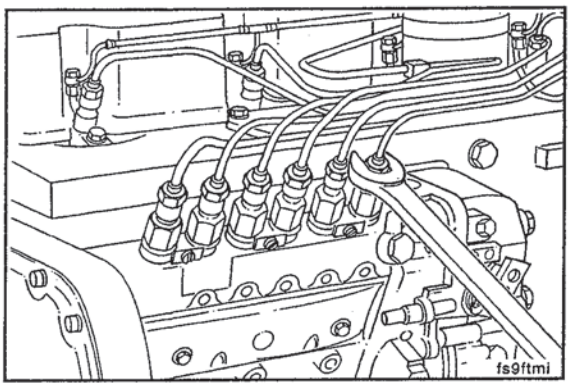

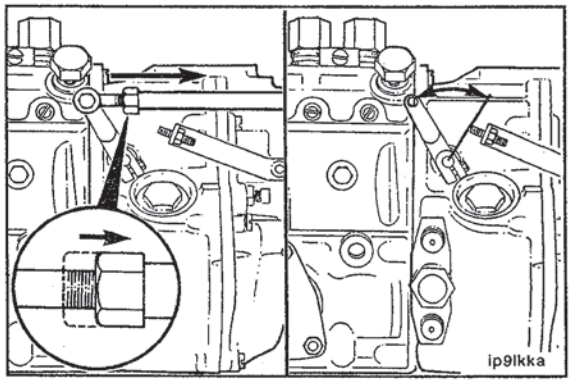


Remove the control linkage; refer to the OEM service manual.

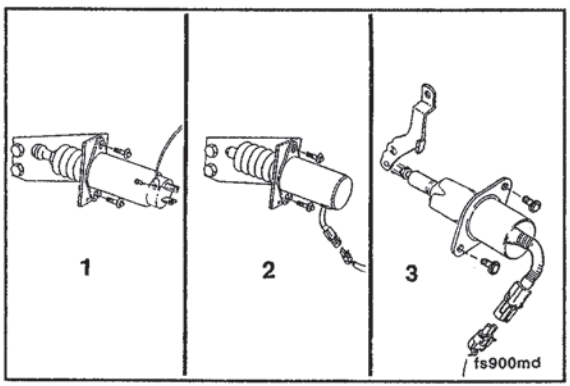


Remove the fuel shutoff solenoid

Remove the AFC air line.

Remove the governor oil line.

## Remove

Locate top dead center for cylinder No. 1. Push the timing pin into the hole in the camshaft gear while slowly rotating the crankshaft with the barring tool, Part No. 3377371.

**NOTE:** Make sure the timing pin is disengaged after locating top dead center.

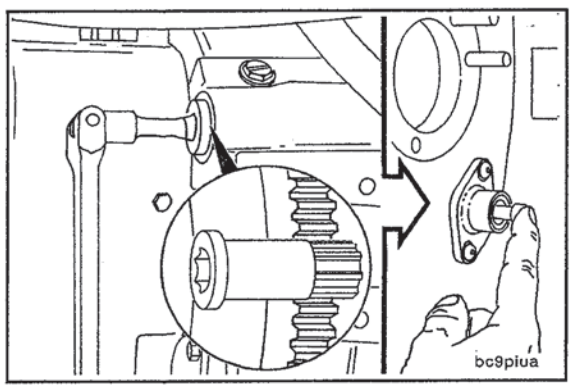

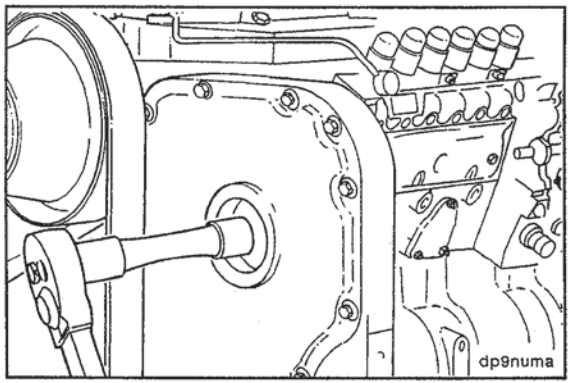


Remove the front gear cover access cap.

Remove the nut and washer from the fuel injection pump shaft.

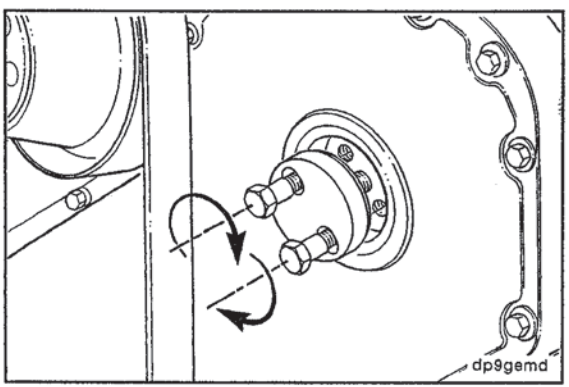


With fuel pump gear puller, Part No. 3824469, pull the fuel injection pump drive gear loose from the shaft.

Remove the four mounting nuts and the capscrews that fasten the fuel injection pump support to the cylinder block.

Remove the four fuel injection pump mounting nuts.

Remove the fuel injection pump.

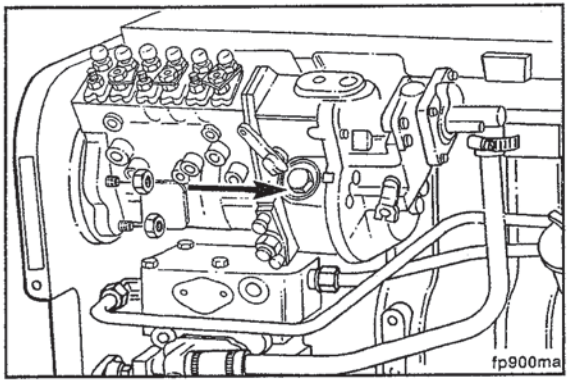


## Install

Make sure cylinder No. 1 is at top dead center.

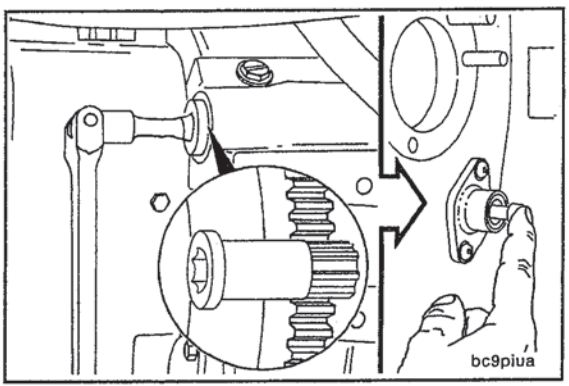

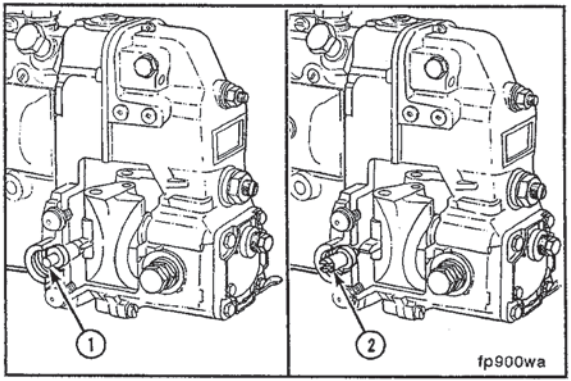


**NOTE:** The fuel injection pump also has a timing pin (1), located in the governor housing, to position the fuel injection pump shaft to correspond with top dead center for cylinder No. 1. The timing pin **must** be reversed and stored in the housing (2) after the fuel injection pump is installed.

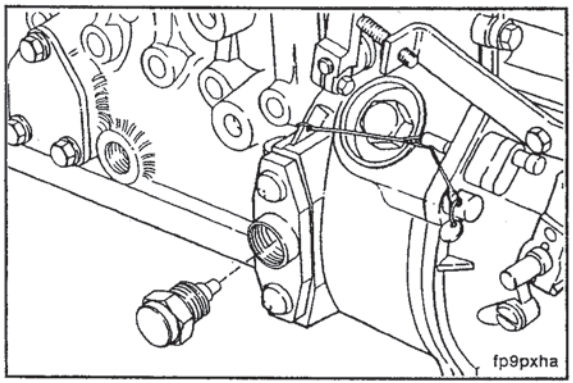


Remove the fuel injection pump timing pin access plug.

Remove the timing pin.

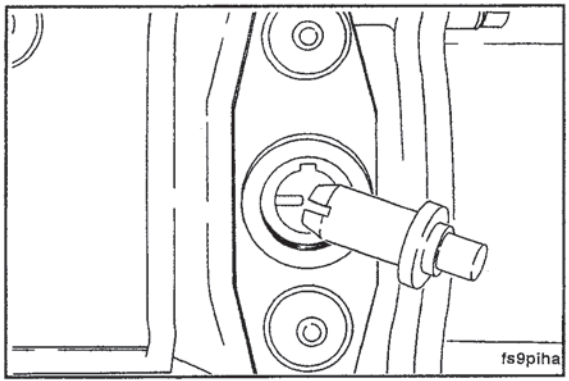


**NOTE:** If the timing tooth is **not** aligned with the timing pin hole, rotate the fuel injection pump shaft until the timing tooth aligns.

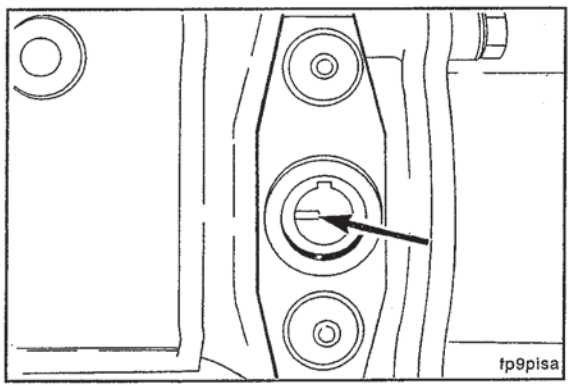

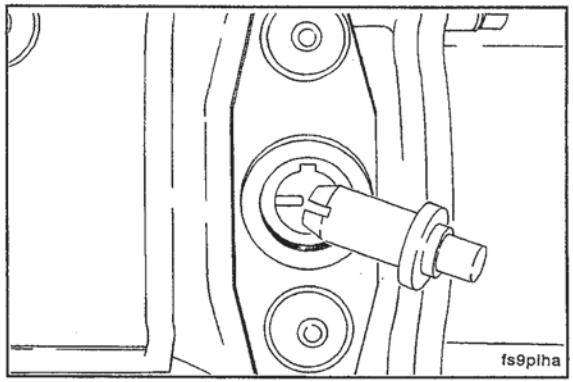


Reverse the position of the timing pin so that the slot of the timing pin will fit over the timing tooth in the fuel injection pump.

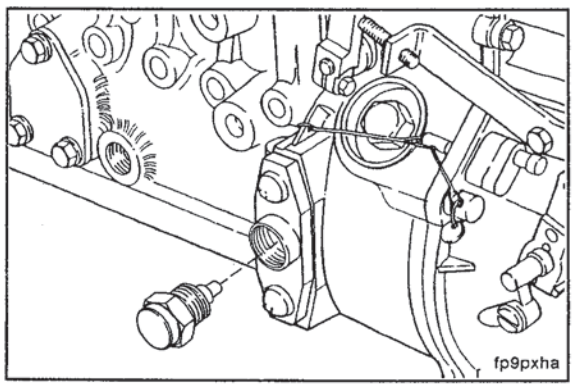


Install and secure the timing pin with the access plug.

**⚠ WARNING ⚠**

**Wear appropriate eye and face protection when using compressed air. Flying debris and dirt can cause personal injury.**

Make sure the o-ring seals for the fill orifice and pilot are correctly installed and are **not** damaged.

Lubricate the mounting flange with clean lubricating engine oil.

**NOTE:** Before installing the fuel pump drive gear, clean the injection pump shaft and gear tapers with residue-free cleaner, Part No. 3824510, by spraying into the gap between the shaft and the gear. Dry the surface with compressed air.

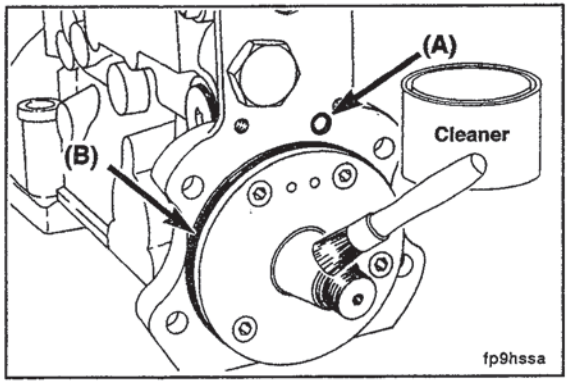

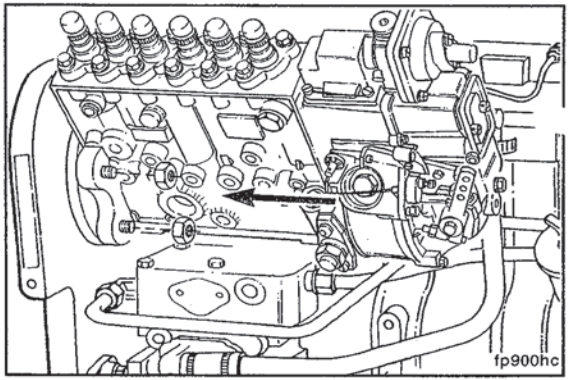


Slide the fuel injection pump shaft through the drive gear, and position the fuel injection pump flange onto the mounting studs.

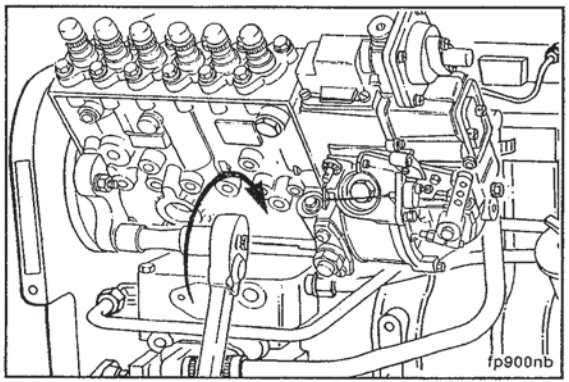


**△ CAUTION △**

**Do not pull the injection pump into the gear housing with the mounting nuts. Damage to the gear housing and fuel pump can result.**

Install the fuel injection pump mounting nuts.

Install the support bracket, if equipped.

**Torque Value:**

| | | |
|---|---|---|
| Mounting nuts | 44 N•m | [32 ft-lb] |
| Support bracket nuts | 32 N•m | [24 ft-lb] |

**NOTE:** To prevent damage to the timing pins, do **not** exceed the torque value given. This is **not** the final torque value for the retaining nut.

Install and tighten the fuel injection pump retaining nut and washer.

**Torque Value:** 12 N•m [106 in-lb]

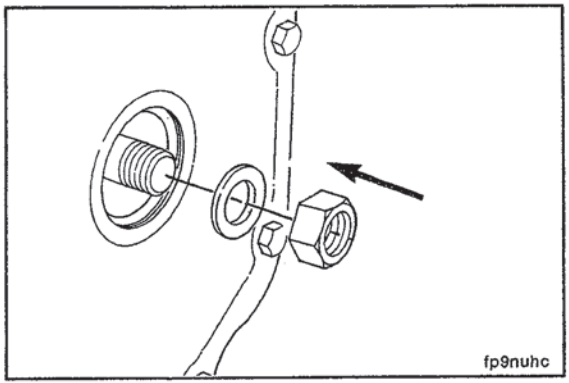


Disengage the engine timing pin.

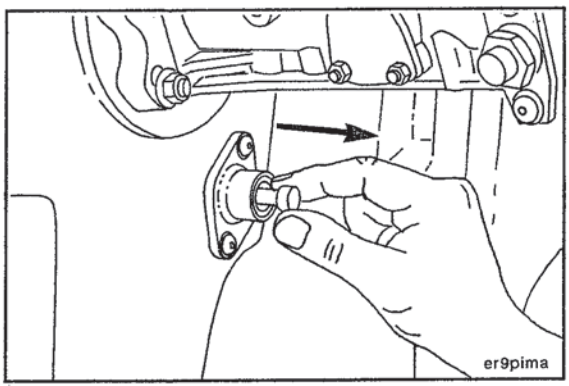

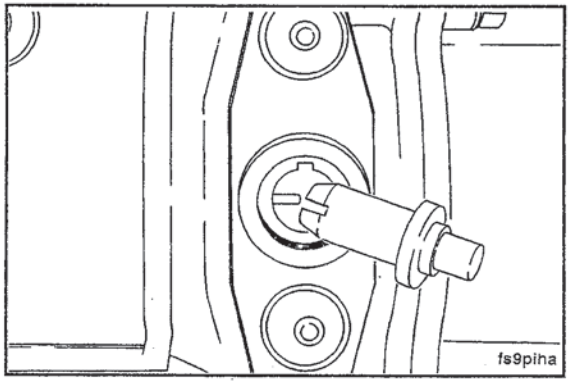


Remove the fuel injection pump timing pin plug.

Reverse the position of the timing pin.

Install the timing pin, plug, and sealing washer.

Tighten the timing pin plug.

**Torque Value:** 15 N•m [133 in-lb]

**⚠ CAUTION ⚠**

**Failure to clean and dry the shaft and gear tapers thoroughly can result in timing shift to the retarded side after the engine is started and running under a load. This will result in low power, smoke, rough running, and engine damage.**

Tighten the fuel injection pump drive gear nut.

**Torque Value:**

| | | |
|---|---|---|
| Bosch® A pump | 85 N•m | [63 ft-lb] |
| Bosch® MW pump | 105 N•m | [77 ft-lb] |
| Bosch® P3000/ P7100 | 195 N•m | [144 ft-lb] |

Install the gear cover access cap hand-tight.

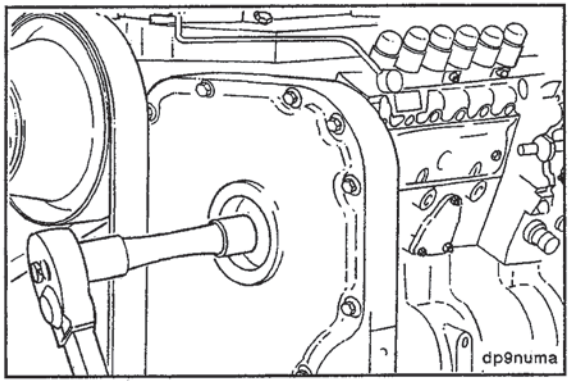

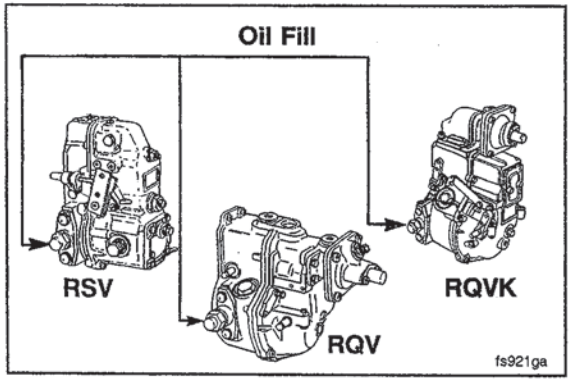


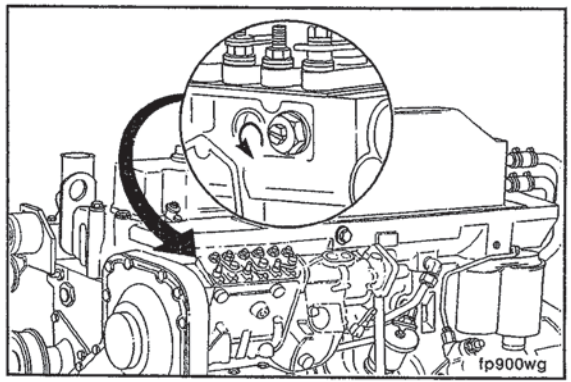


**⚠ CAUTION ⚠**

**If a replacement or repaired pump was installed, be sure to fill the governor housing with clean lubricating engine oil before starting the engine. Failure to do so will result in damage to the fuel pump camshaft and governor fly weights.**

**Governor Housing Oil Capacity**

| ml | | fl oz |
|---|---|---|
| 450 | RSV | 15.2 |
| 750 | RQV, RQVK | 25.4 |
| 500 | RSV-H | 16.9 |

The PES.MW pump **must** be vented after installation. Loosen the vent screw located near the front on the side nearest to the engine. Crank the engine so air can bleed from the fuel injection pump; then tighten the vent screw.

**NOTE:** Earlier PES.MW fuel injection pumps were **not** equipped with a vent screw. Remove the large plug from the location described above to vent the fuel injection pump. PES.A pumps are self-venting.

**Torque Value:** 9 N•m [80 in-lb]

Vent each high-pressure fuel line separately until the engine runs smoothly. Tighten the high-pressure fuel lines.

**Torque Value:**

| | |
|---|---|
| 17 mm | 24 N•m [212 in-lb]. |
| 19 mm | 30 N•m [22 ft-lb]. |

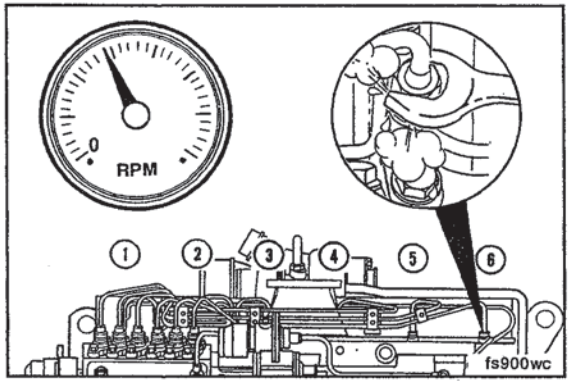


# Fuel Pump

## Adjust

**⚠ CAUTION ⚠**

**Failure to set low idle with bumper spring could result in an unstable governor (engine surge).**

Idle adjustment for industrial engines requires setting both the low-idle screw and the bumper spring screw.

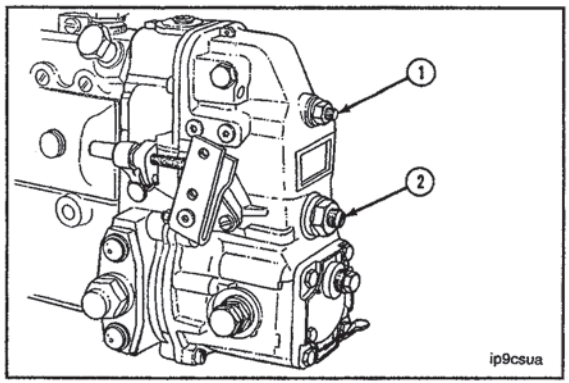

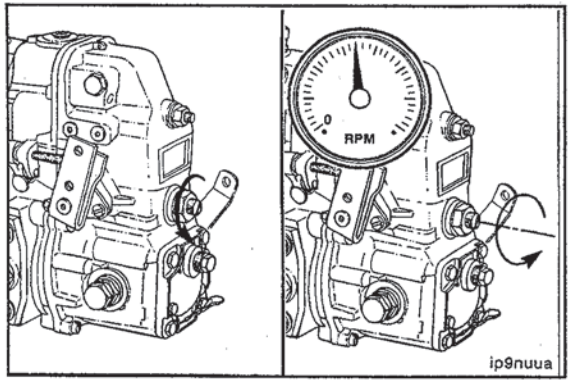


First, loosen the locknut and back out the bumper spring screw until there is no change in engine speed.

**NOTE:** The speed should drop 30 to 40 rpm as the bumper spring screw is backed out.

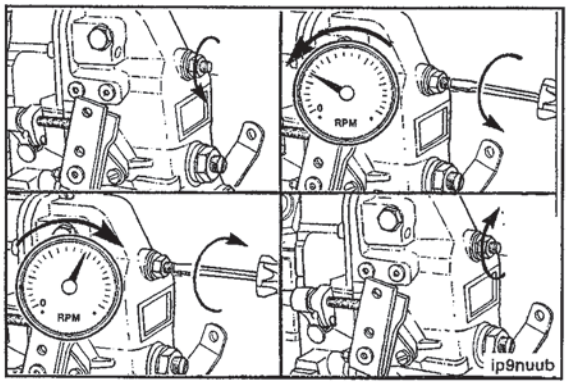


Loosen the locknut and adjust the idle screw to 30 to 40 rpm less than desired speed. Turn the idle screw **counterclockwise** to decrease rpm; **clockwise** to increase rpm. Tighten the idle-screw locknut.

**Torque Value:** 8 N•m [71 in-lb]

Turn the bumper spring **clockwise** until the dataplate-specified idle speed is obtained with normal idle operation accessory load (i.e., air conditioning, hydraulic loads, transmission). Tighten the locknut.

**Torque Value:** 8 N•m [71 in-lb]

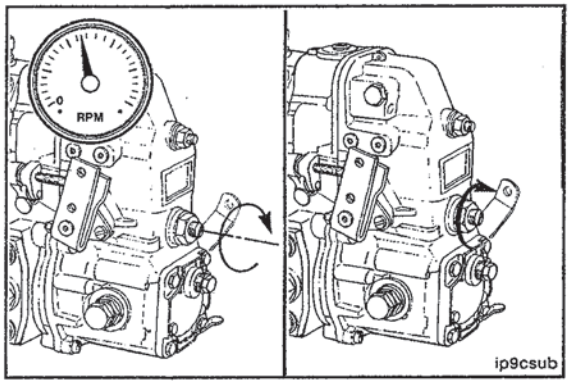


Idle adjustment on fuel injection pumps with RQV and RQVK governors requires setting of the idle-adjustment screw.

Loosen the locknut and turn the idle-adjustment screw **counterclockwise** to raise the rpm; **clockwise** to decrease the idle speed until the dataplate specified idle speed is attained with normal-idle operation accessory loads (i.e., transmission, hydraulic, air conditioning). Tighten the locknut.

**Torque Value:** 8 N•m [71 in-lb]

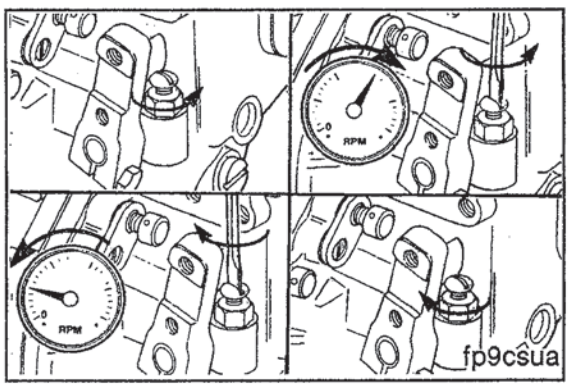

# Air Intake System - Overview

## General Information

| Component to Be Replaced | Tools | Preparatory Steps* |
|---|---|---|
| Intake air piping | 8-mm socket, common screwdriver, and torque wrench | |
| Intake manifold cover and gasket | 10-mm socket | Disconnect cold starting aid, if used, and air piping. |
| Aftercooler and gasket | 8-mm and 10-mm sockets | Disconnect cold starting aid if used, remove air crossover tube, and drain coolant. |
| Turbocharger and/or gasket | 10-mm, 15-mm, 16-mm, 7/16-Inch wrenches | Disconnect intake and exhaust piping. |
| Exhaust manifold and/or gasket | 15-mm socket | Disconnect intake and exhaust piping, and remove the turbocharger. |

* Removal of some chassis parts is sometimes necessary to gain access to some engine components. Follow the equipment manufacturer's procedures and precautions for removing chassis parts.

# Air Intake Piping

## Remove

Loosen the hose clamps and remove the air piping.

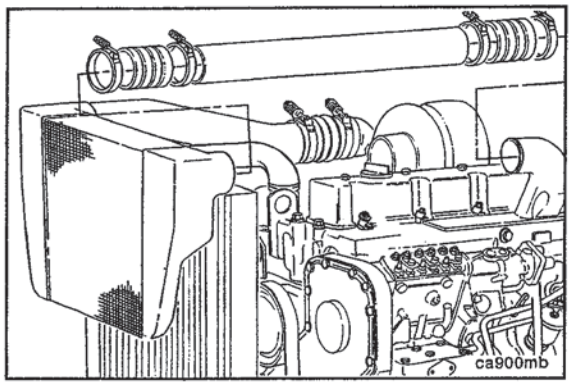


## Install

Use new hose piping and clamps as required.

Tighten the hose clamps.

Refer to the manufacturer's specifications for the correct torque value.

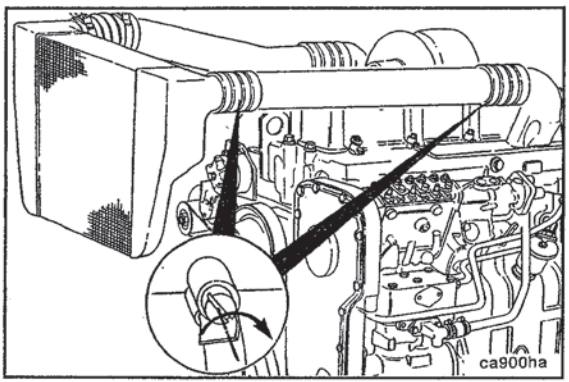

# Air Connection Pipe (Turbocharger to Turbocharger)

## Preparatory

Disconnect the cold starting air (if equipped).

Remove the air crossover tube.

Remove the high-pressure fuel lines.

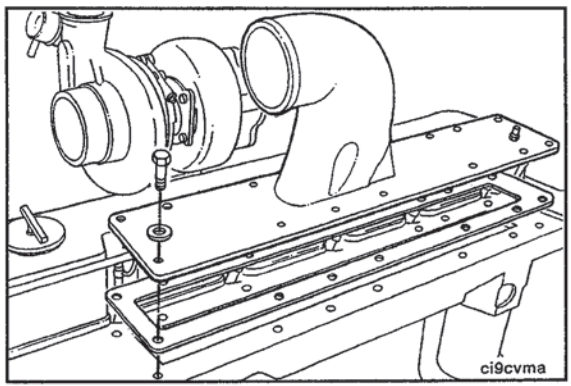


## Remove

Remove the air intake manifold cover and gasket.

Plug intake with clean cloth to prevent foreign material from entering intake system.

## Clean

Clean the sealing surface.

**NOTE:** Keep the gasket material and any other material out of the air intake manifold.

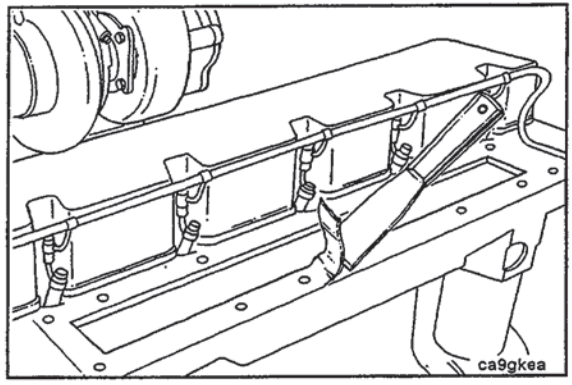


## Install

Install the air intake manifold cover and a new gasket.

Install the high-pressure fuel lines.

**Torque Value:** 24 N•m [212 in-lb]

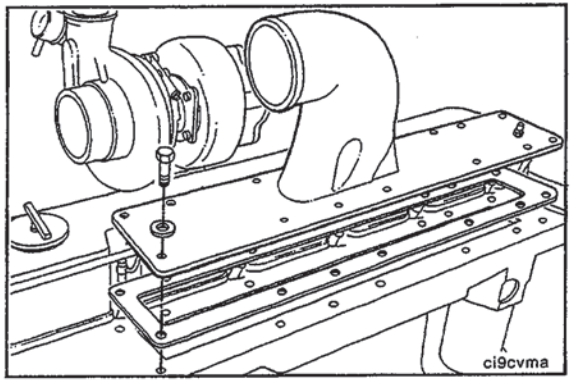

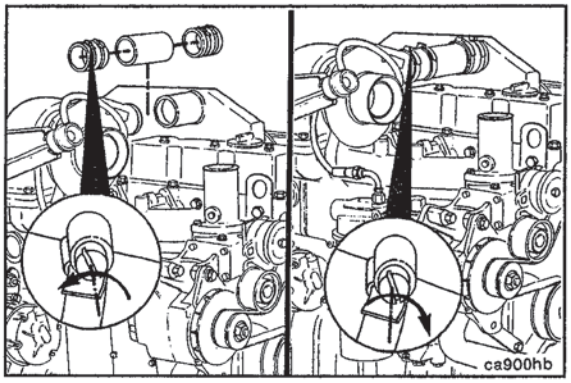


## Vent

Assemble the intake piping and connect the cold starting aid (if equipped). Vent the high-pressure fuel lines.

# Aftercooler

## Preparatory

**⚠ WARNING ⚠**

**Coolant is toxic. Keep away from children and pets. If not reused, dispose of in accordance with local environmental regulations.**

Disconnect the cold starting aid (if equipped).

Remove the air crossover tube.

Drain 2 liters [2.1 qt] of coolant.

Remove the high-pressure fuel lines.

## Remove

Remove the coolant supply tube and the coolant return tube (off-highway engines).

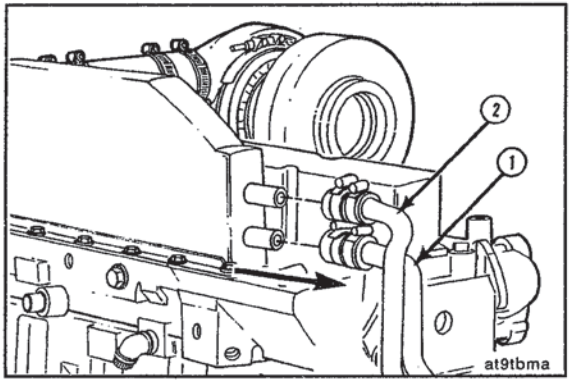


Remove the aftercooler housing and gasket.

Plug opening with clean shop cloth to prevent foreign material from entering air intake.

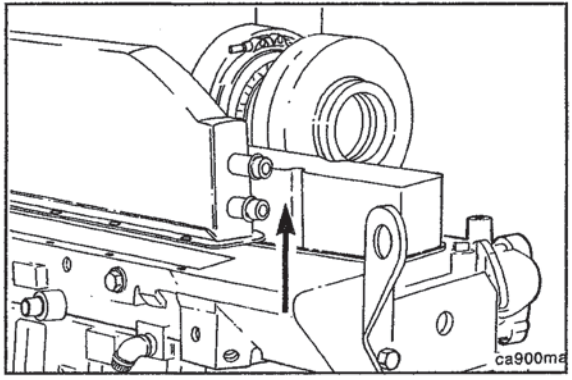

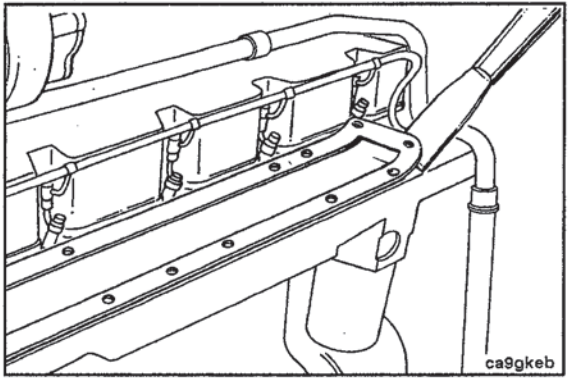


## Clean

Clean the sealing surface.

**NOTE:** Keep the gasket material and any other material out of the air intake.

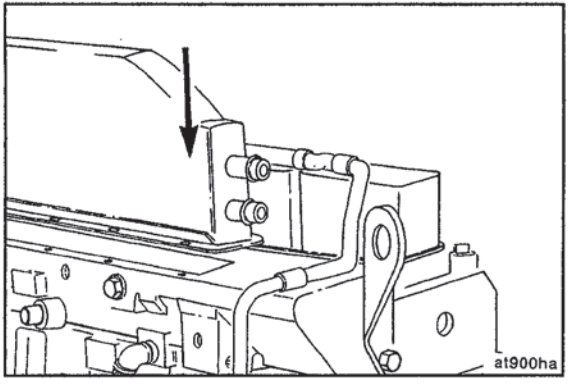


## Install

Install the aftercooler housing and a new gasket.

Install the high-pressure fuel lines.

**Torque Value:** 24 N•m [212 in-lb]

Install the coolant supply tube and coolant return tube. Install the air crossover tube.

**Torque Value:** 8 N•m [71 in-lb]

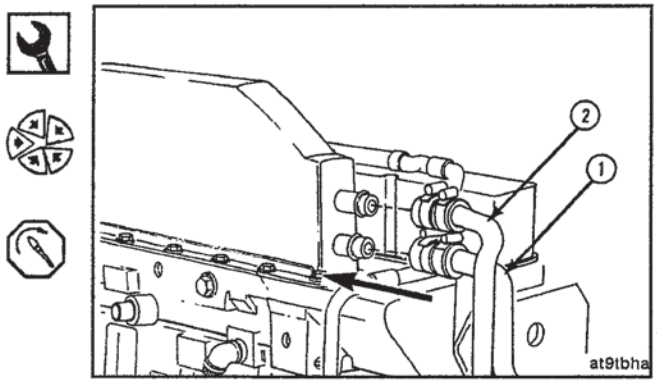


## Fill

**⚠ CAUTION ⚠**

**Be sure to open the engine and aftercooler vents to allow air to escape as the system is filled. Refer to Section 7. Vent the high-pressure fuel lines.**

Fill the coolant system with a mixture of 50-percent water and 50-percent ethylene-glycol-type antifreeze.

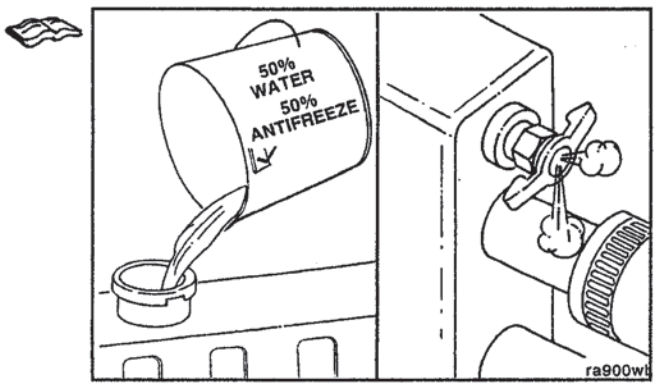

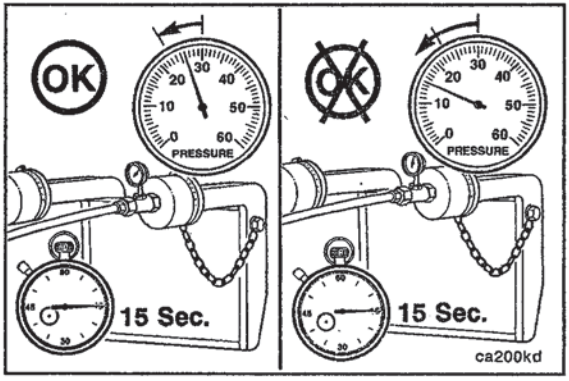


# Charge-Air Cooler (CAC)

## Leak Test

Apply 276 kPa [40 psi] of air pressure to the cooler. If the pressure drop is 35 kPa [5 psi] or less in 15 seconds, the cooler is okay.

If the pressure drop is greater than 35 kPa [5 psi] in 15 seconds, the charge air cooler **must** be repaired or replaced. Refer to the charge air cooler manufacturer for repair instructions.

**NOTE:** A leak tank can be used to locate the air leak.

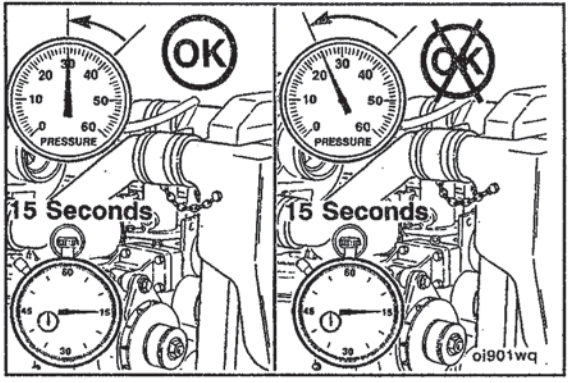


## Pressure Test

Install pressure gauge, Part No. ST-1273, to the fitting in the turbocharger outlet.

Install another pressure gauge, Part No. ST-1273, in the intake manifold.

Operate the engine at rated rpm and load. Record the readings on the two gauges.

If the pressure differential is greater than 21 kPa [3 psi], inspect the charge air cooler for plugging.

Clean or replace if necessary.

# Air Intake Manifold

## Pressure Test

To check the charge air cooler for cracked tubes or header, remove the inlet and outlet hoses from the cooler.

Remove the charge air cooler.

Install a cap over the outlet side of the cooler. Install a pressure gauge and a shop air supply line to the inlet side of the cooler.

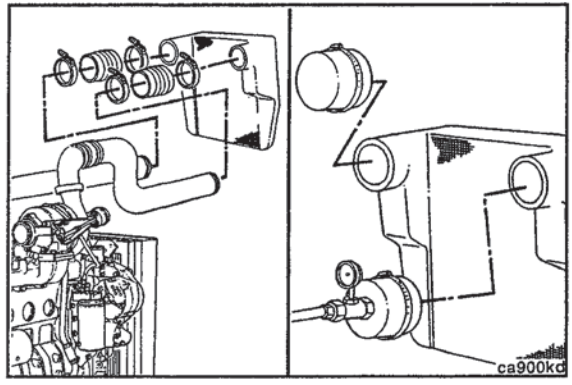


## Temperature Differential Test

Install a temperature gauge in the intake manifold.

Lock the fan drive in the ON mode to prevent erratic test results. This can be done by installing a jumper across the temperature switch or supplying shop air to the fan. Refer to the OEM service manual for lockup procedure.

**NOTE:** Some trucks have a manual switch that will lock on the fan.

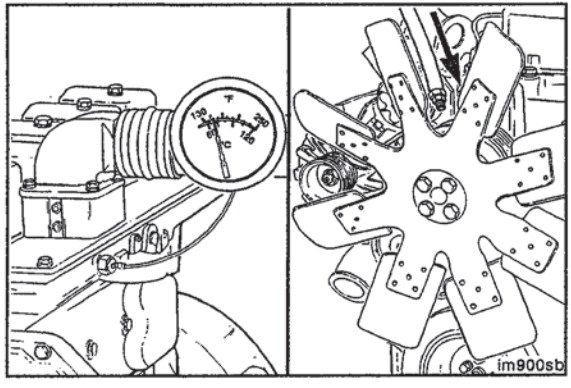

# Turbocharger

## Preparatory

- Remove the air intake piping.
- Disconnect the intake and exhaust piping.
- Disconnect the wastegate actuator line.

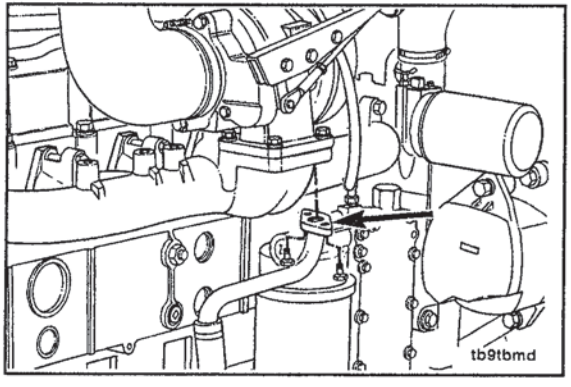


## Remove

Remove the capscrews from the oil drain tube.

Remove the oil supply line.

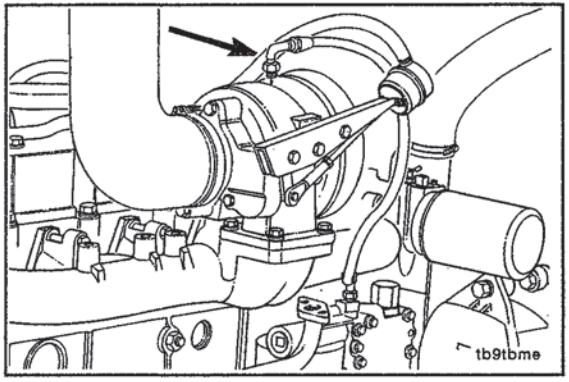


Remove the exhaust clamp, turbocharger, and gasket.

Plug exhaust flange with clean shop cloth to prevent foreign material from entering manifold.

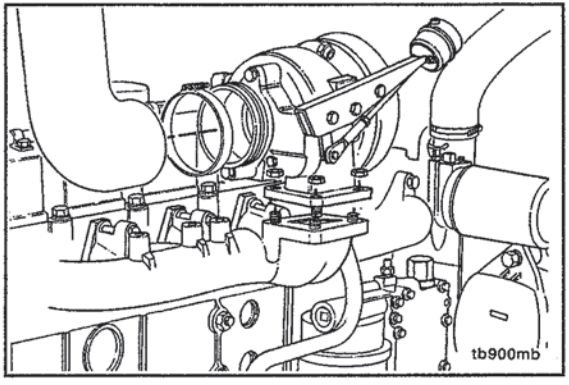

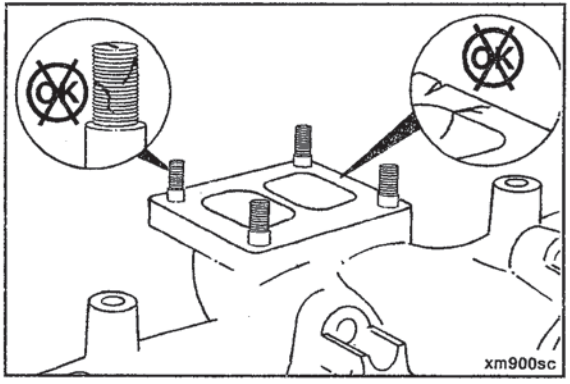


## Clean

Clean the sealing surface. Inspect the sealing surface and mounting studs for damage.

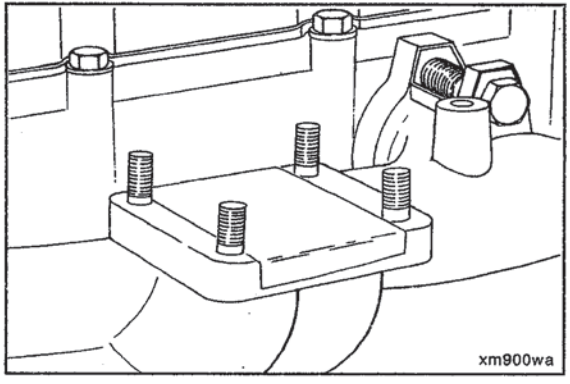


## Install

**△ CAUTION △**

**If the turbocharger is not to be immediately replaced, cover the opening to prevent any material from falling into the manifold.**

Install a new gasket, and apply anti-seize compound to the mounting studs.

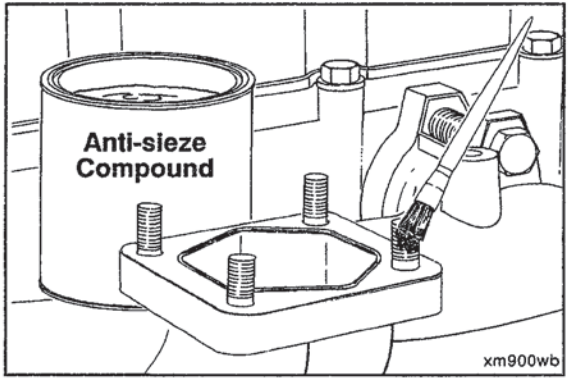


Install the turbocharger.

**Torque Value:** 45 N•m [33 ft-lb]

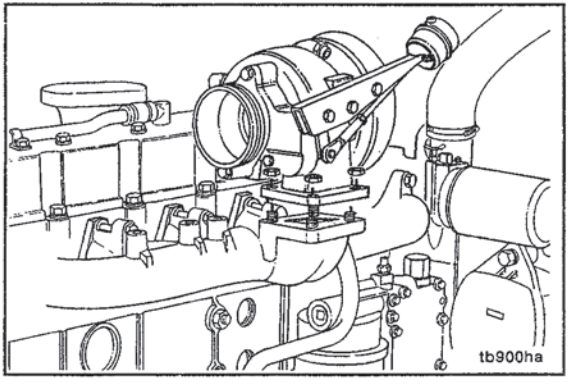

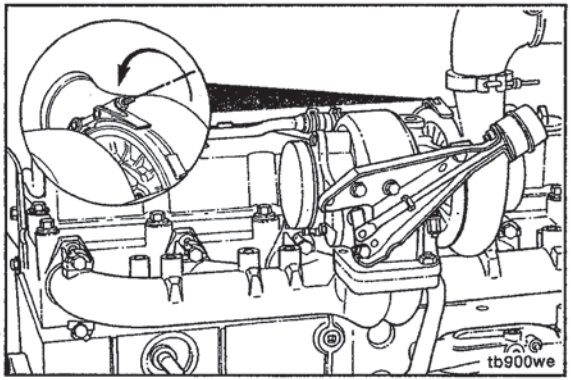


If required, loosen the turbine housing capscrews, and position the bearing housing to install the turbocharger drain tube.

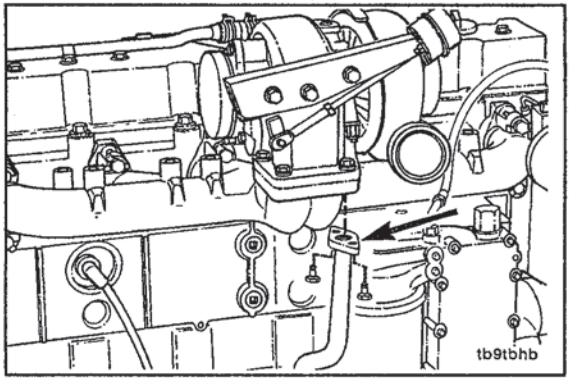


Install the hose and clamps on the turbocharger drain tube loosely. Install the drain tube and gasket on the turbocharger.

**Torque Value:** 24 N•m [212 in-lb]

Position the turbocharger drain hose to connect the drain tubes; tighten the clamps.

**Torque Value:** 5 N•m [44 in-lb]

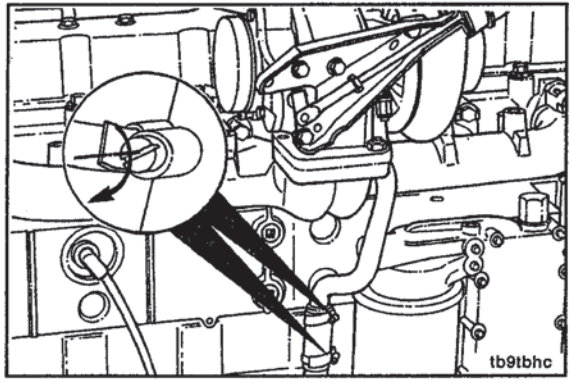


If loosened, tighten the turbine housing capscrews.

**Torque Value:** 11 N•m [97 in-lb]

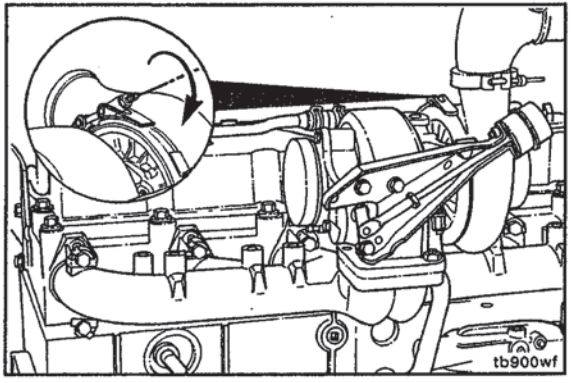

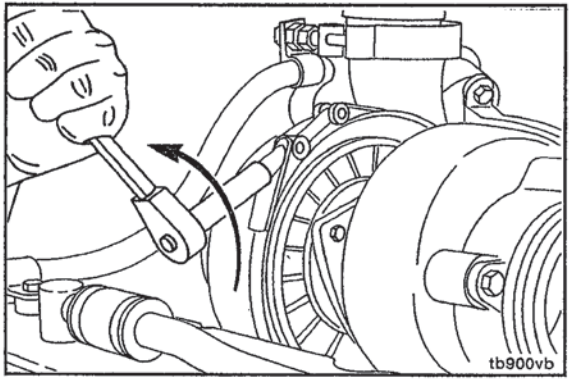


If required, loosen the compressor housing, and position the housing to align with the air crossover tube.

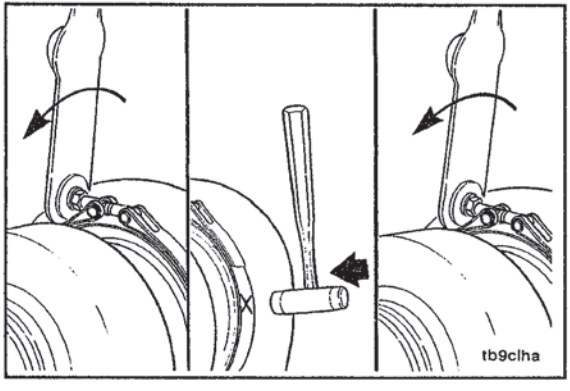


Tighten the band clamp. Tap around the clamp with a plastic hammer and tighten again.

**Torque Value:** 8 N•m [71 in-lb]

**NOTE:** Effective October 1, 1990, all Holset® turbochargers use silver-plated nuts with the V-band clamp. The silver-plated nuts require a lower torque than the stainless steel nut to provide the same V-band clamp load.

**⚠ CAUTION ⚠**

**New turbochargers must be prelubricated before start-up to prevent internal damage.**

Pour 50 to 60 cc [2 to 3 oz] of clean lubricating engine oil into the oil supply fitting. Rotate the turbine wheel to allow the lubricating oil to enter the bearing housing.

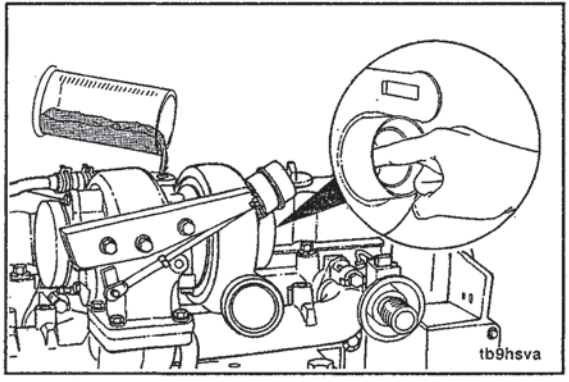


Install the exhaust outlet connection.

Do **not** tighten the two mounting capscrews until the band clamp has been tightened.

**Torque Value:**

| | | |
|---|---|---|
| Band Clamp | 8 N•m | [71 in-lb] |
| Capscrews | 43 N•m | [32 ft-lb] |

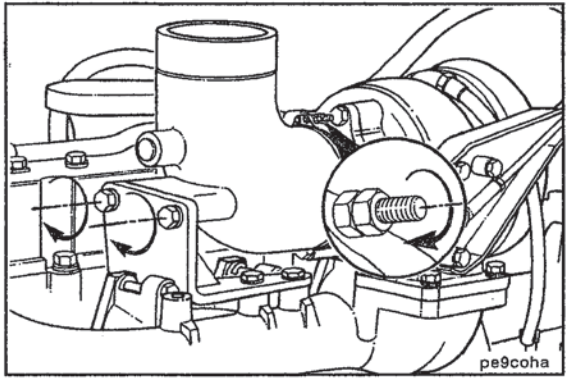

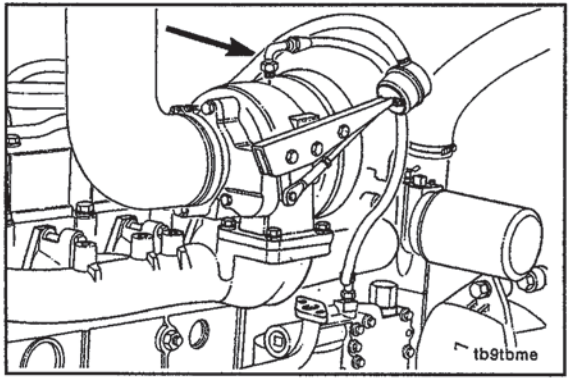


**⚠ WARNING ⚠**

**The oil supply line must not contact the turbine housing. The line can burn, causing equipment damage and severe personal injury.**

Install the lubricating oil supply line.

**Torque Value:** 35 N•m [26 ft-lb]

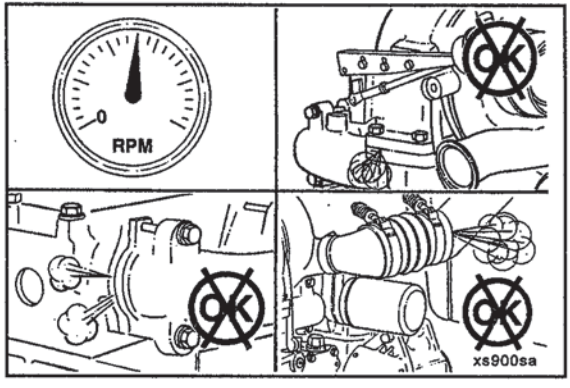


## Test

Install the air inlet and exhaust piping. Install the wastegate actuator line.

Operate the engine and check for leaks.

# Exhaust Manifold, Dry

## Preparatory

Remove the air crossover tube.

Disconnect the air intake and exhaust piping.

Remove the turbocharger, if used.

## Remove

Remove the exhaust manifold and gaskets.

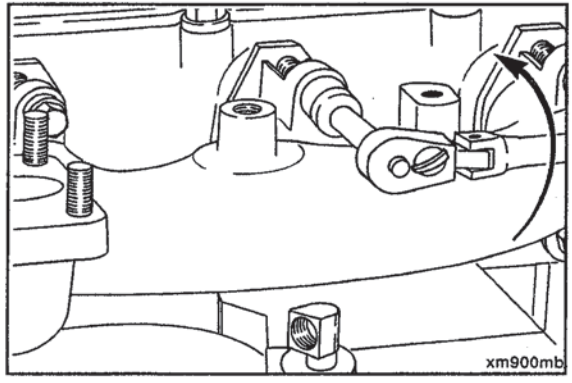

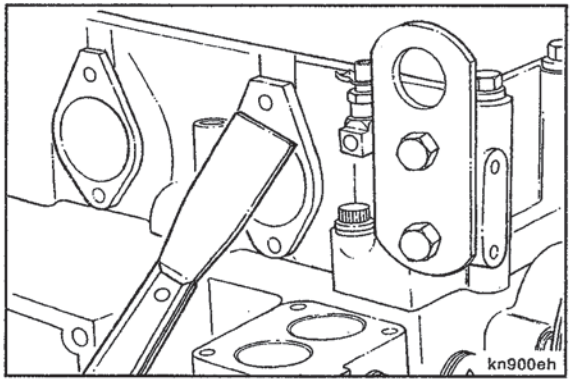


## Clean

Clean the exhaust manifold sealing surfaces.

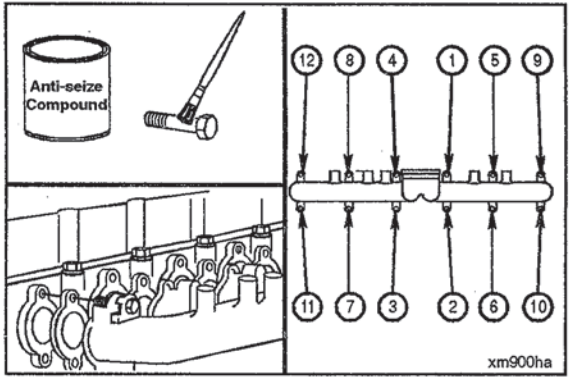


## Install

Install the exhaust manifold, new gaskets, and lock plates.

**Torque Value:** 43 N•m [32 ft-lb]

Follow the tightening sequence shown in the illustration.

Apply anti-seize compound to exhaust manifold bolts upon reassembly.

Install the parts previously removed. Operate the engine and check for leaks.

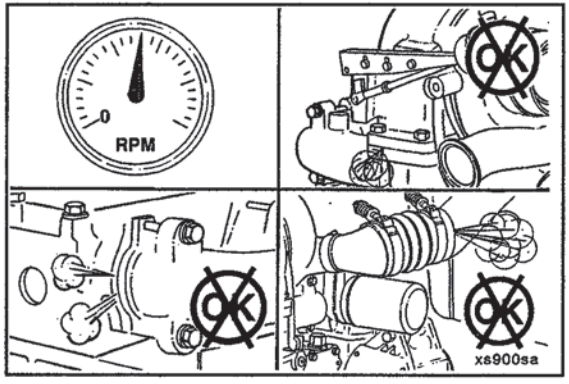

# Lubricating Oil System - Overview

## General Information

**⚠ WARNING ⚠**

**Some state and federal agencies have determined that used engine oil can be carcinogenic and cause reproductive toxicity. Avoid inhalation of vapors, ingestion, and prolonged contact with used engine oil.**

| Component to Be Replaced | Tools | Preparatory Steps |
|---|---|---|
| Oil pressure regulator valve and/or spring | 22-mm socket, ratchet, and torque wrench | Clean debris. |
| Lubricating oil thermostat | 32-mm socket, ratchet, and torque wrench | Clean debris. |
| Oil cooler element and/or gaskets | 16-mm wrench, ratchet, 10-mm socket, and torque wrench | Drain coolant.<br>Remove the oil filter. |

# Lubricating Oil Pressure Regulator (Main Rifle)

## Preparatory

**⚠ WARNING ⚠**

**When using solvents, acids, or alkaline materials for cleaning, follow the manufacturer's recommendations for use. Wear goggles and protective clothing to avoid personal injury.**

Clean the area around the pressure regulator plug with solvent to prevent debris from falling into the plunger bore when the plug is removed.

## Remove

Remove the threaded plug, spring, and plunger.

**Service Tip:** The plunger normally can be removed by inserting one finger into the plunger bore until snug, and pulling up. If the plunger can **not** be removed in this manner, the plunger is probably stuck and will require removal of the housing for plunger removal and cleaning.

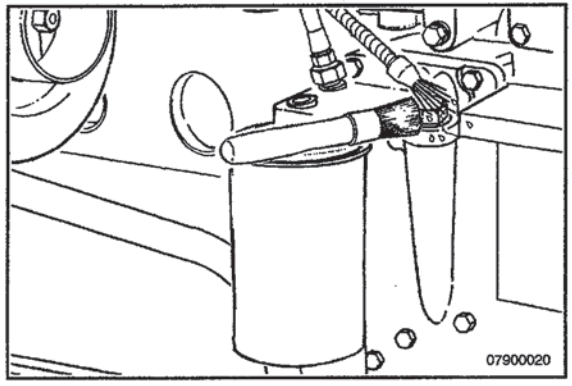


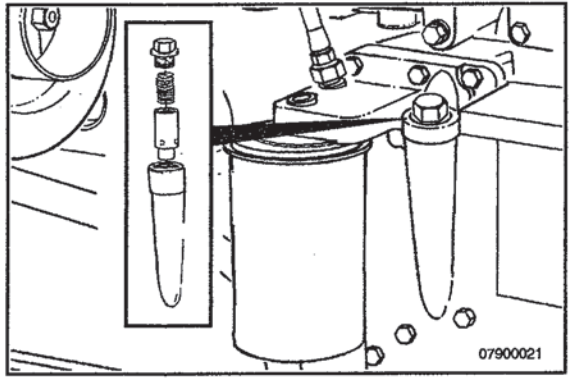

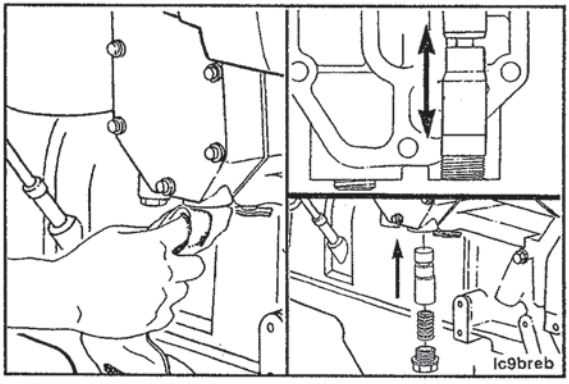


## Clean

Clean and inspect the bore and regulator valve before assembly.

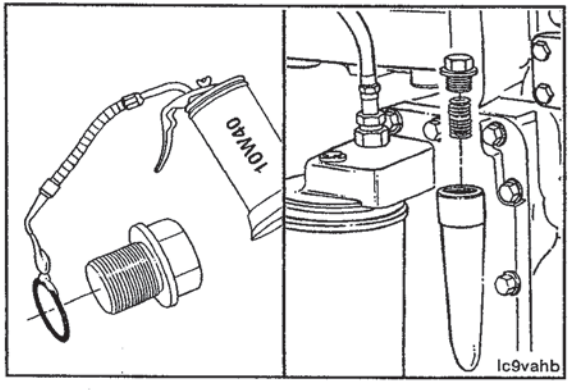


## Install

**NOTE:** The valve **must** move freely in the bore.

Install the regulator, spring, and plug.

**Torque Value:** 80 N•m [59 ft-lb]

# Lubricating Oil Cooler

## Preparatory

Drain the coolant.

Remove the lubricating oil filter.

## Clean

Clean all debris from around the lubricating oil cooler.

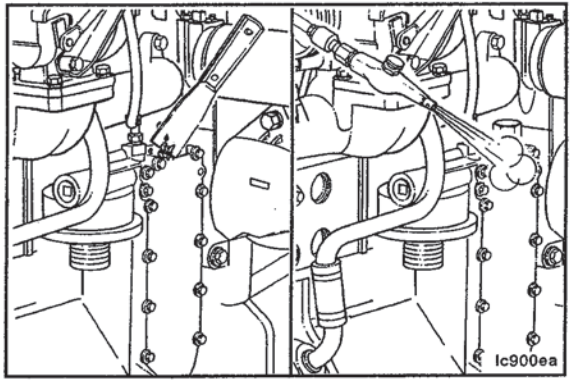

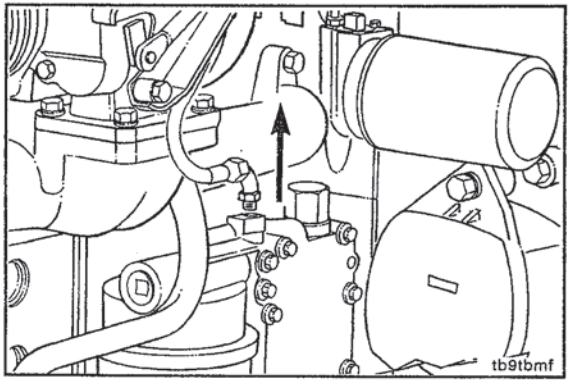


## Remove

Remove the turbocharger oil supply line from the oil filter head.

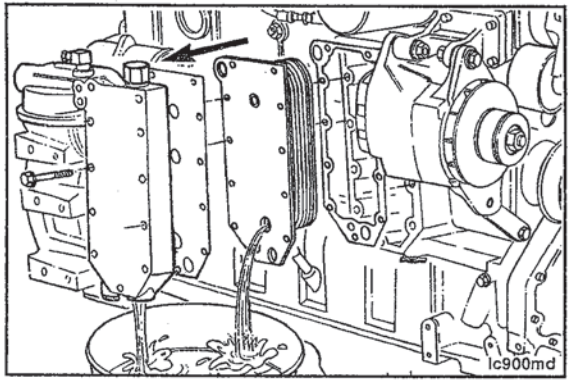


Remove the oil cooler cover, element, and gaskets.

**NOTE:** The element will contain approximately 0.7 liters [0.75 qt] of lubricating oil, which will drain when the cooler is removed from the engine.

Clean the oil cooler sealing surfaces.

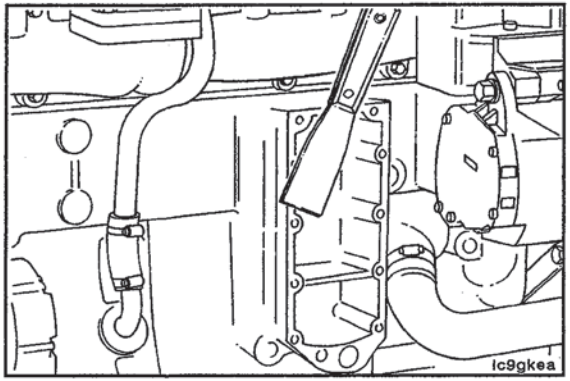


## Pressure Test

Pressurize the element to 690 kPa [100 psi] to check it for leaks.

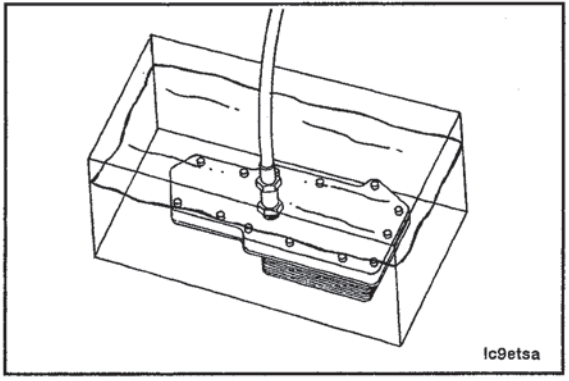

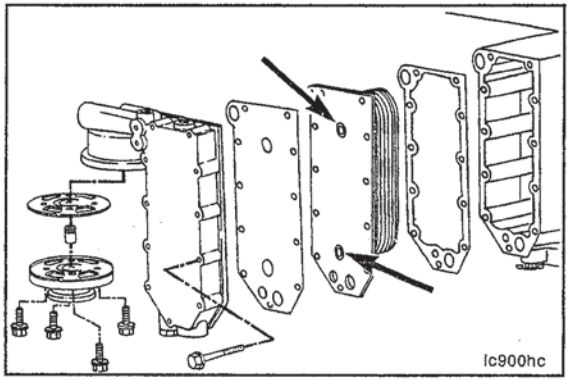


## Install

Assemble the lubricating oil cooler gasket, element, cooler cover gasket, lubricating oil thermostat, and oil cooler cover to the cylinder block.

Install the filter head and gasket if removed.

**Torque Value:** 24 N•m [212 in-lb]

**NOTE:** Be sure to remove the shipping plugs from the new cooler element.

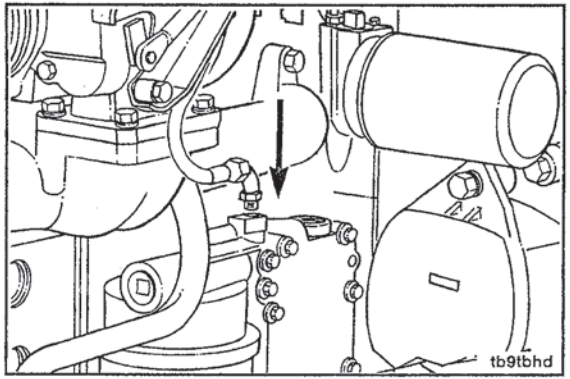


Connect the turbocharger oil supply line.

**Torque Value:** 15 N•m [133 in-lb]

Install a new lubricating oil filter.

Follow the manufacturer's instructions for tightening.

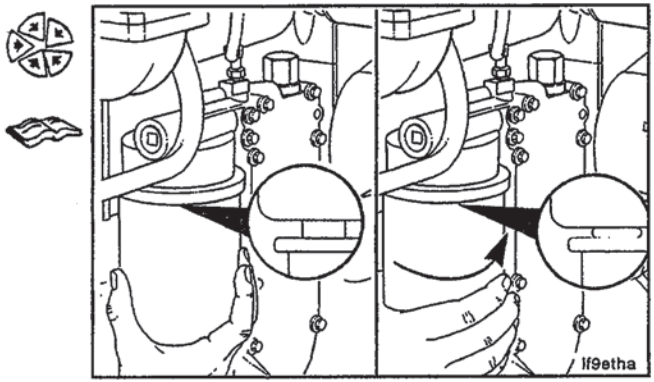


## Fill

**NOTE:** Be sure to open the engine and aftercoolers, vents to allow air to escape as the system is filled. Refer to Section 7.

Fill the coolant system, and operate the engine to check for leaks.

Stop the engine, and check the coolant and lubricating oil level.

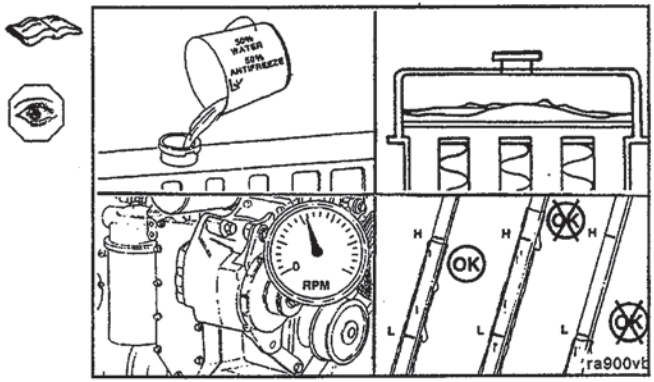

# Lubricating Oil Thermostat

## Preparatory

Clean debris from oil thermostat.

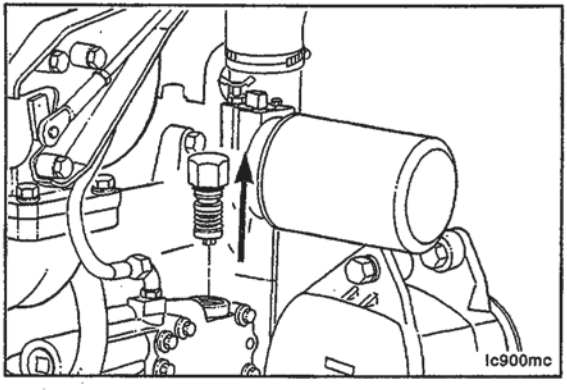


## Remove

Remove the lubricating oil thermostat.

## Clean

Clean and inspect the lubricating oil thermostat bore before assembly.

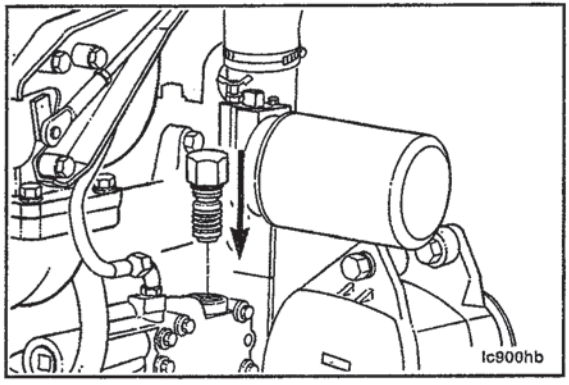


## Install

Install and tighten the oil cooler bypass valve.

**Torque Value:** 50 N•m [37 ft-lb]

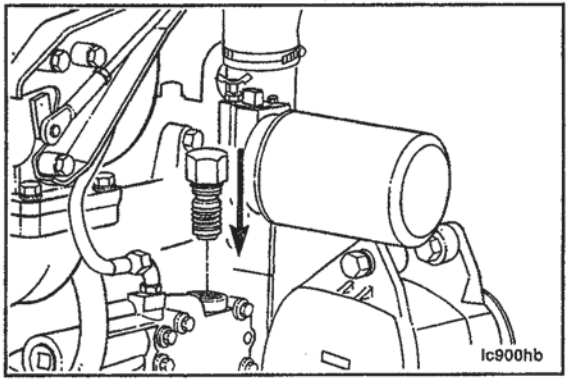

# Electrical Equipment - Overview

## General Information

**⚠ WARNING ⚠**

**Batteries can emit explosive gas. To avoid personal injury, always ventilate the compartment before servicing the batteries. To avoid arcing, remove the negative (-) battery cable first and attach the negative (-) battery cable last.**

| Component to Be Replaced | Tools | Preparatory Steps |
|---|---|---|
| Starting motor | Ratchet, 16-mm socket, 19-mm wrench, and torque wrench | Disconnect ground cable to battery. |
| Alternator | Ratchet, 8-mm, 13-mm, and 17-mm sockets and torque wrenches, 1/2-Inch square drive breaker bar | Disconnect ground cable to battery, and remove drive belt. |

# Starting Motor

## Remove

Disconnect the ground cable from the battery.

Identify each electrical wire with a tag indicating location.

Remove the battery cable from the solenoid.

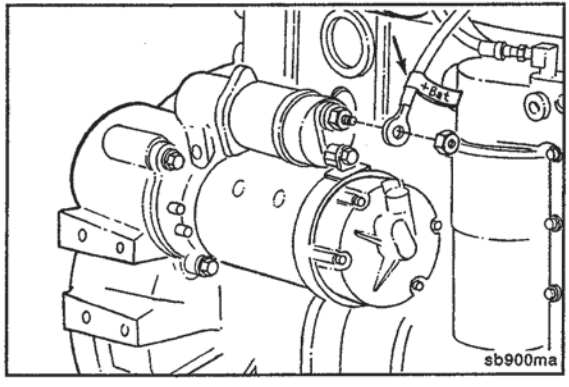

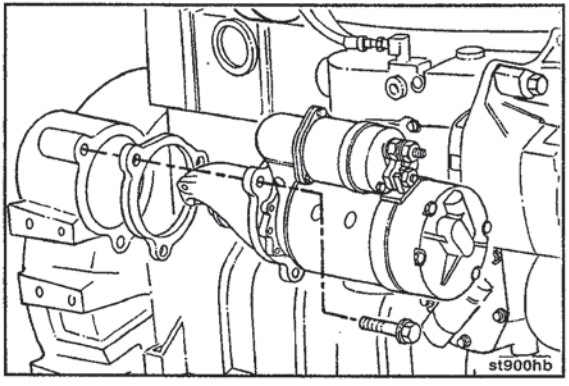


Remove the starting motor and spacer.

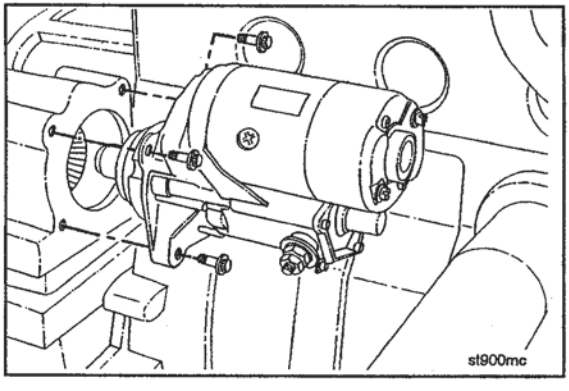


## Install

Install the starter motor in the reverse order of removal.

**Torque Value:** 43 N•m [32 ft-lb]

# Alternator

## Remove

Disconnect the ground cable from the battery terminal.

Identify each electrical wire with a tag indicating location.

Remove the drive belt.

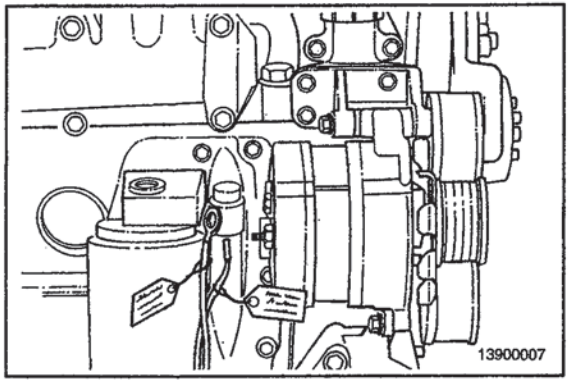


Remove the capscrew from the alternator link.

Remove the capscrew from the support bracket.

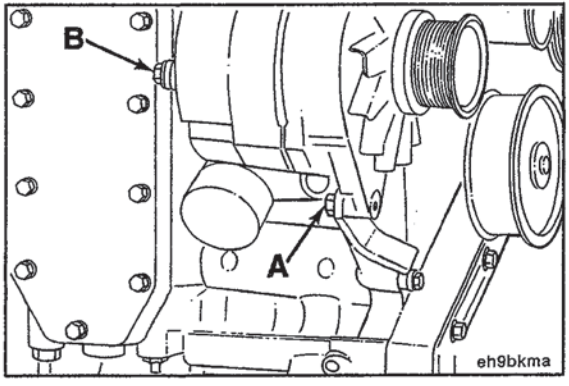

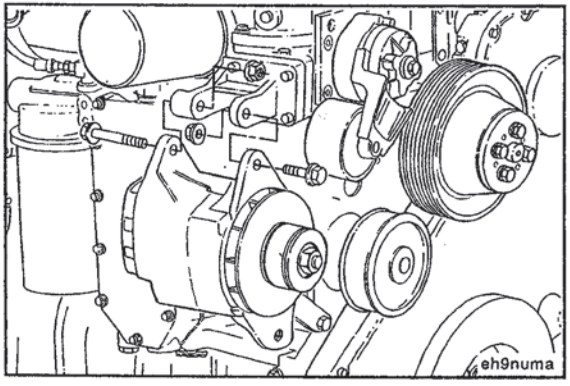


Remove the alternator mounting capscrews and nuts.

Remove the alternator.

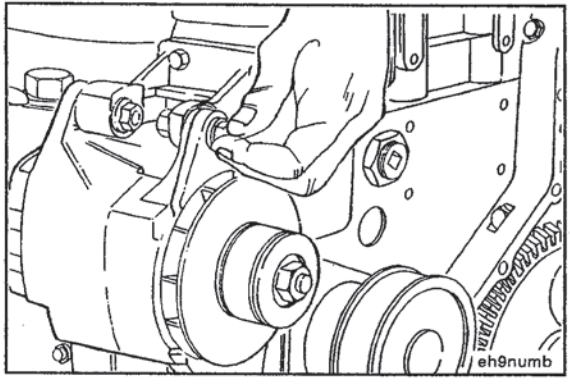


## Install

Position the alternator on the bracket and secure it with the mounting capscrews.

**NOTE:** Do **not** tighten at this time.

Connect the alternator link to the alternator. Finger-tighten.

**NOTE:** Make sure the alternator link is properly positioned for correct belt alignment.

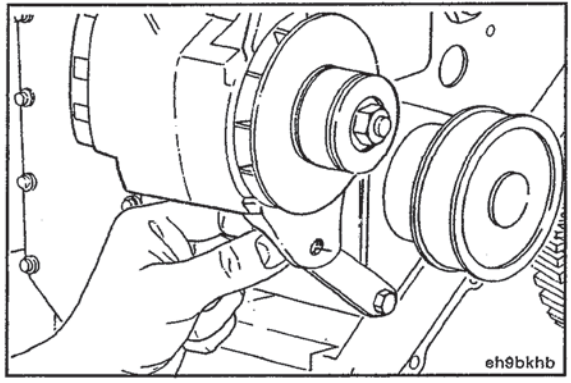


Tighten the alternator mounting capscrew.

**Torque Value:**

| | |
|---|---|
| A = | 43 N•m [32 ft-lb]. |
| B = | 24 N•m [212 in-lb]. |

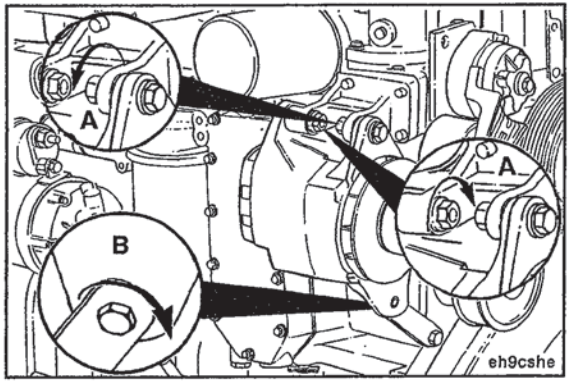


Install the drive belt.

# NOTES

# Section D - System Diagrams

## Section Contents

| | Page |
|---|---|
| **Flow Diagram, Air Intake System** | D-20 |
| General Information | D-20 |
| **Flow Diagram, Compressed Air System** | D-24 |
| General Information | D-24 |
| **Flow Diagram, Cooling System** | D-12 |
| General Information | D-12 |
| **Flow Diagram, Exhaust System** | D-22 |
| General Information | D-22 |
| **Flow Diagram, Fuel System** | D-2 |
| General Information | D-2 |
| **Flow Diagram, Lubricating Oil System** | D-4 |
| General Information | D-4 |
| **System Diagrams - Overview** | D-1 |
| General Information | D-1 |

THIS PAGE LEFT INTENTIONALLY BLANK

# System Diagrams - Overview

## General Information

The following drawings show the flow through the engine systems. Although parts can change between different applications and installations, the flow remains the same. The systems shown are:

- Fuel system
- Lubricating oil system
- Coolant system
- Intake air system
- Exhaust system.

Knowledge of the engine systems can help in troubleshooting, service, and general maintenance of your engine.

# Flow Diagram, Fuel System

## General Information

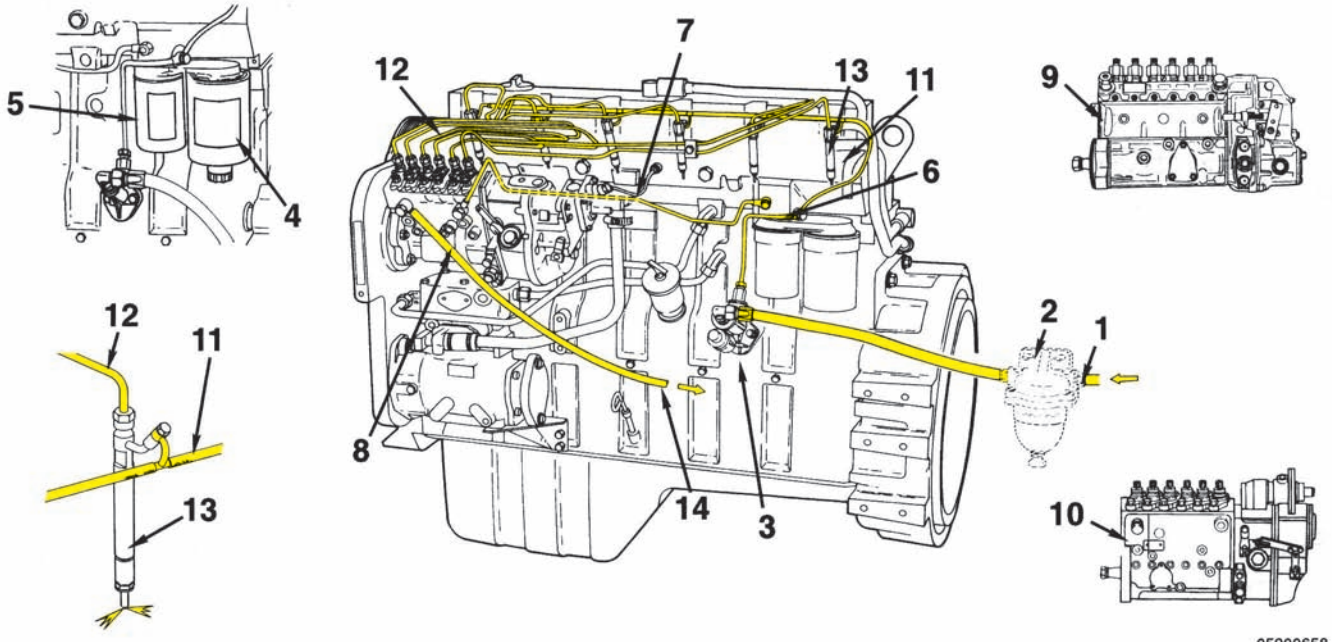

1. Fuel from supply tank
2. Prefilter or screen
3. Fuel transfer pump
4. Fuel/water separator
5. Fuel filter
6. Low-pressure supply line
7. Turboboost control line
8. Robert Bosch® PES.MW injection pump
9. Robert Bosch PES.A injection pump
10. Robert Bosch PES.P injection pump
11. Fuel drain manifold
12. High-pressure fuel lines
13. Robert Bosch, 7-mm closed-nozzle, hole-type injectors
14. Fuel return to supply tank.

# Flow Diagram, Lubricating Oil System

## General Information

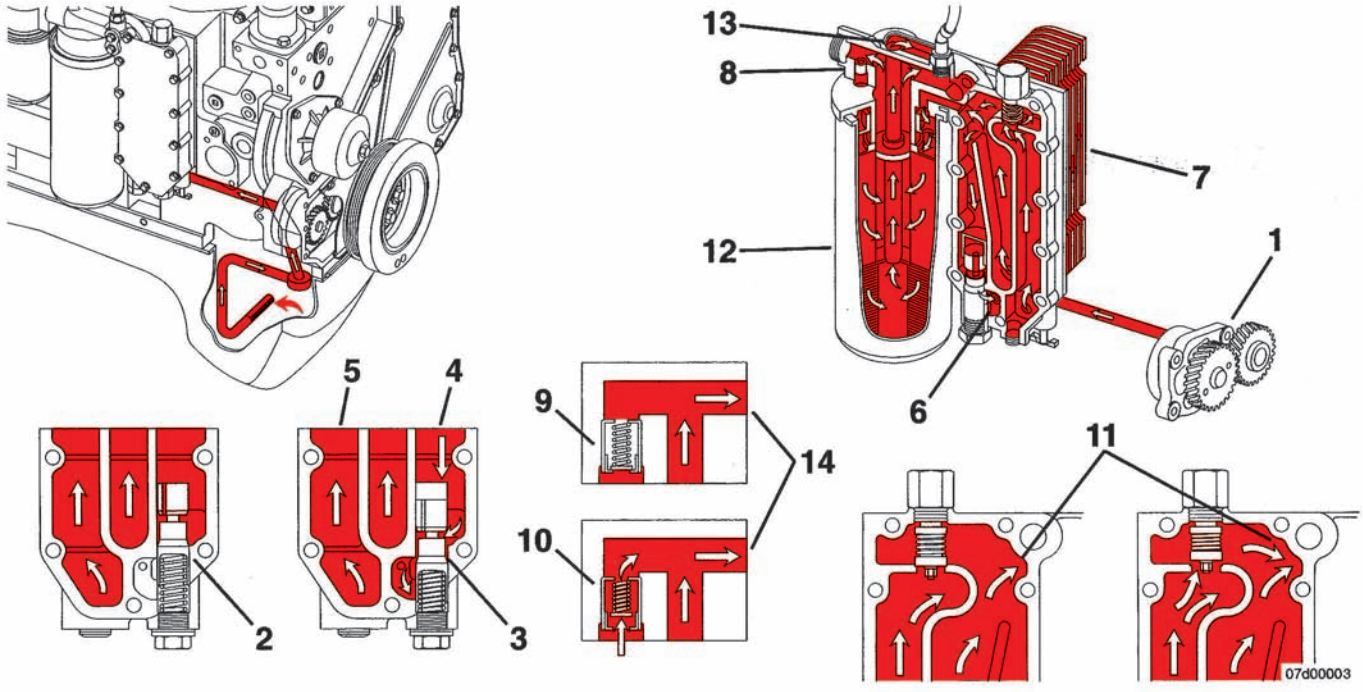

1. Gerotor lubricating oil pump
2. Pressure regulating valve closed
3. Pressure regulating valve open
4. From lubricating oil pump
5. To lubricating oil cooler
6. To lubricating oil pump oil pan
7. Lubricating oil cooler
8. Filter bypass valve
9. Filter bypass valve closed
10. Filter bypass valve open
11. To lubricating oil filter
12. Full-flow lubricating oil filter
13. From lubricating oil filter
14. Main lubricating oil rifle.

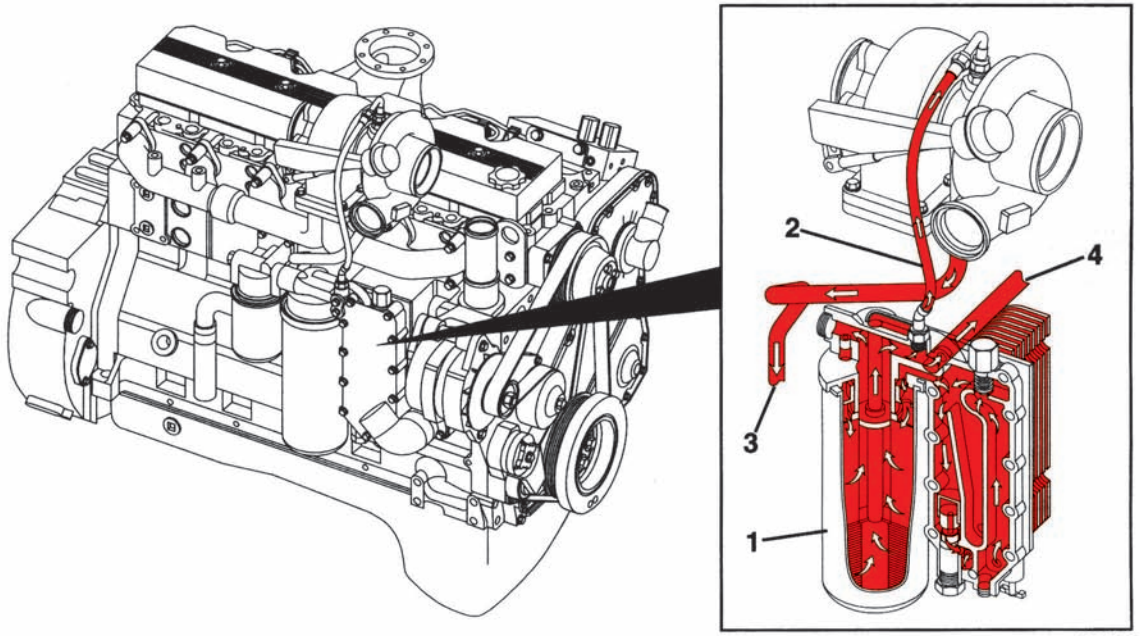
2
4
3
1
07900133

1. Lubrication oil filter
2. Turbocharger lubricating oil supply
3. Turbocharger lubricating oil drain
4. To main lubricating oil rifle.

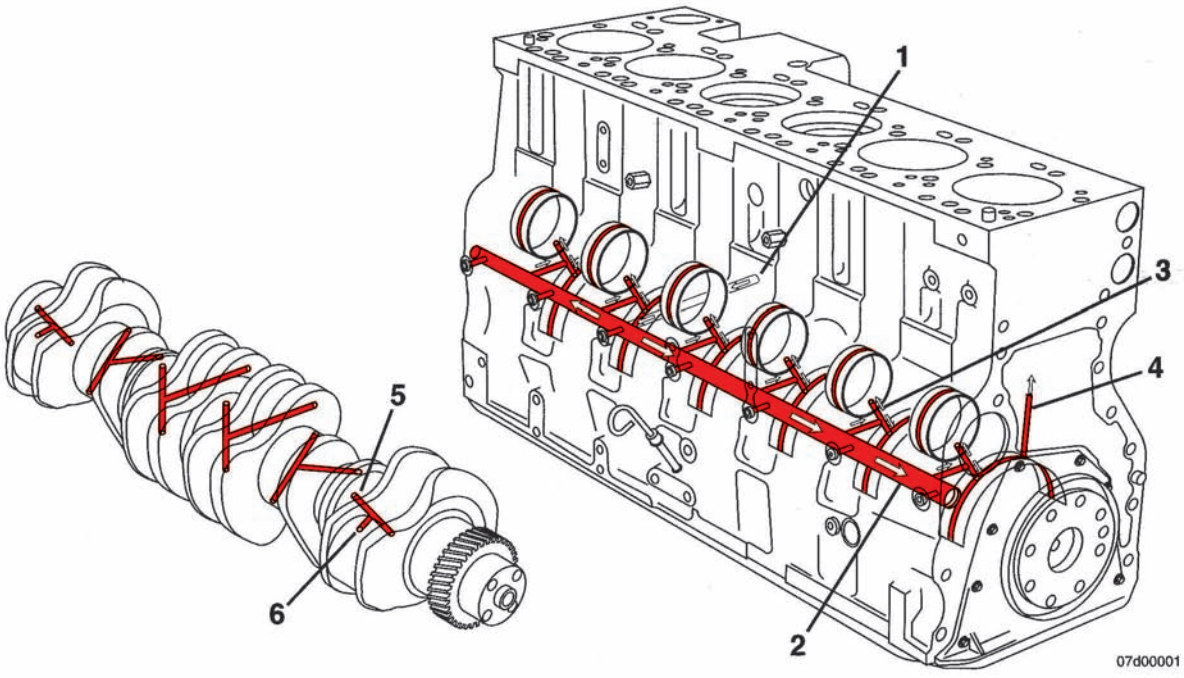
1
2
3
4
5
6
07d00001

1. From lubricating oil cooler
2. Main lubricating oil rifle
3. To camshaft
4. To piston cooling nozzle
5. From main lubricating oil rifle
6. To connecting rod bearing.

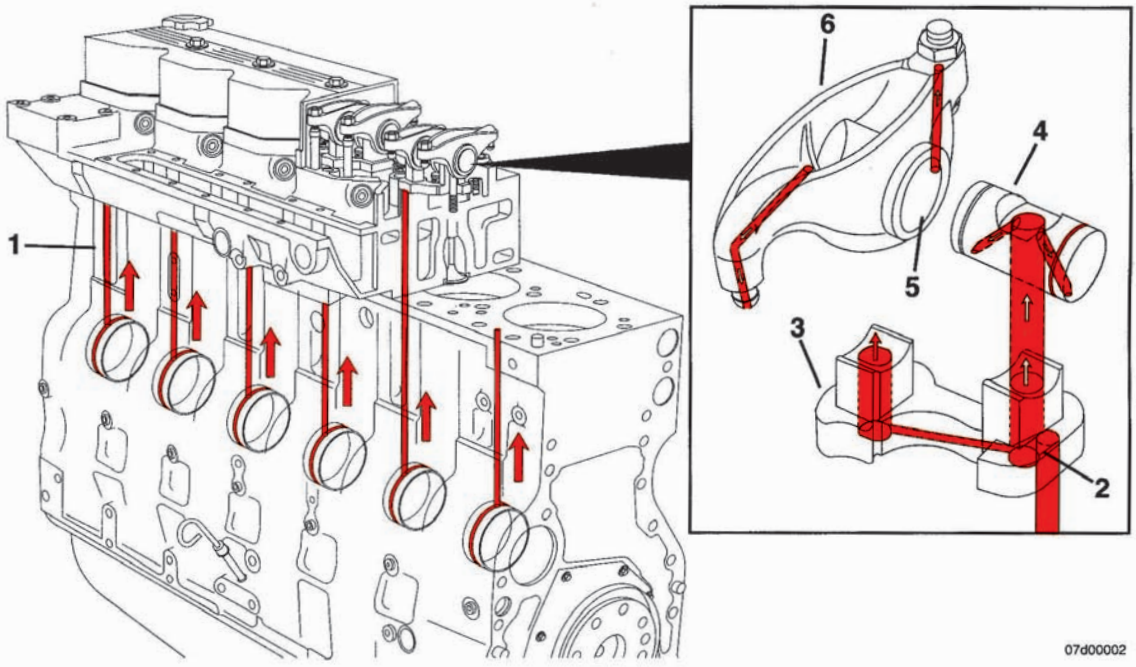
1
6
4
5
3
2
07d00002

1. From cam bushings
2. Transfer slot
3. Rocker lever support
4. Rocker lever shaft
5. Rocker lever bore
6. Rocker lever.

# Flow Diagram, Cooling System

## General Information

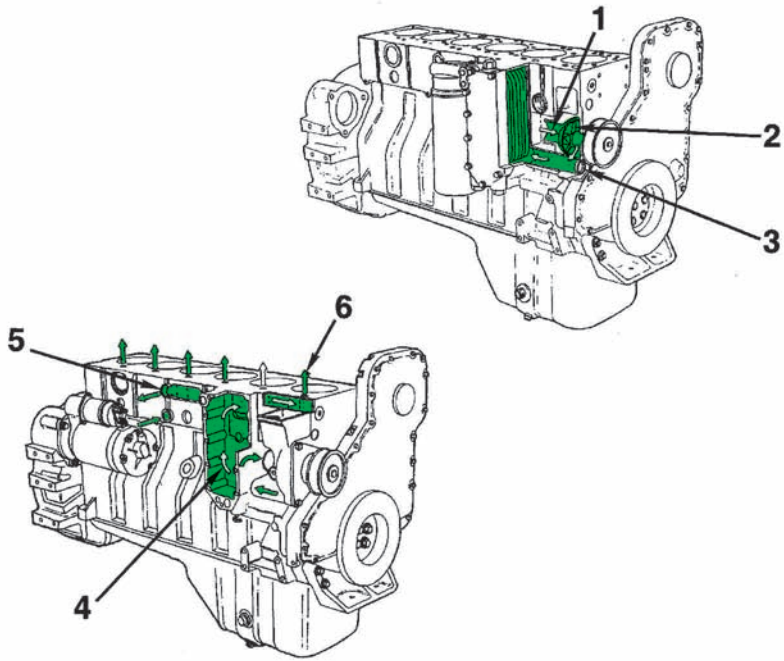


08900201

1. Coolant inlet
2. Water pump impeller
3. Coolant flow to oil cooler
4. Coolant flow past oil cooler
5. Upper coolant manifold
6. Coolant flow to cylinder head.

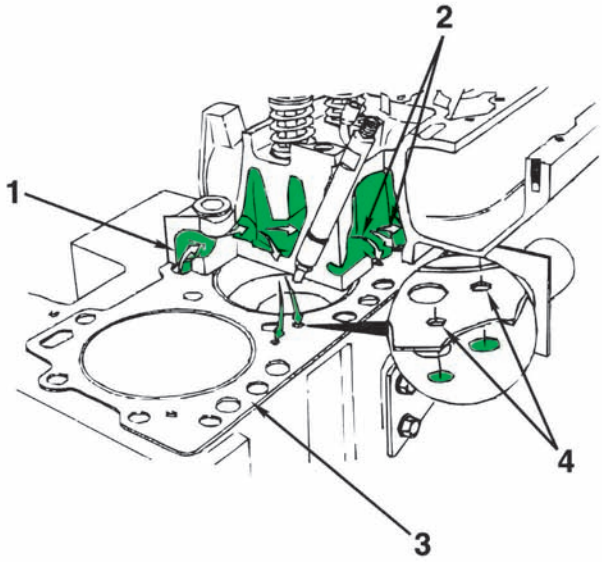


08900203

1. Flow from upper coolant manifold
2. Flow to liner cavity
3. Cylinder head gasket
4. Coolant flow orifice.

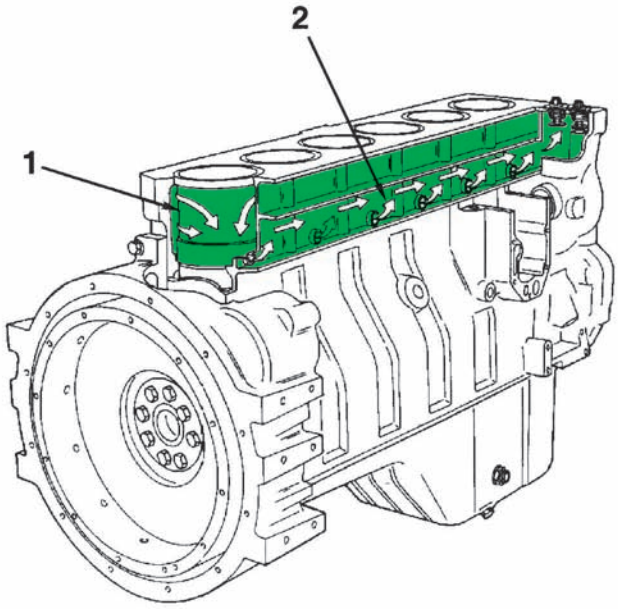


08900200

1. Flow past cylinder liners
2. Lower coolant manifold.

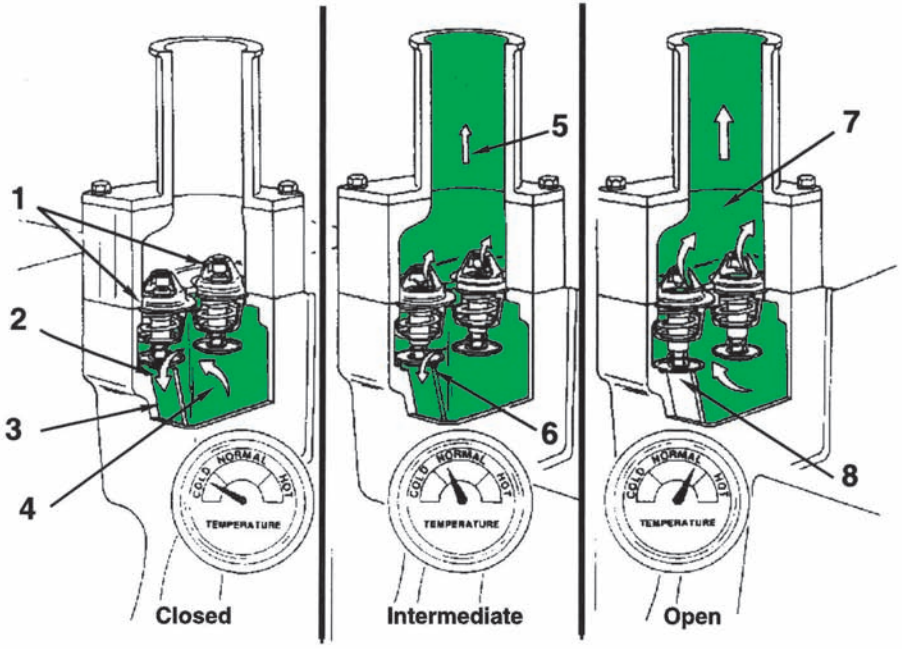
1
2
3
4
5
6
7
8
COLD
NORMAL
HOT
TEMPERATURE
Closed
Intermediate
Open

08900202

1. Thermostats
2. Flow to water pump inlet
3. Bypass passage
4. Flow from lower coolant manifold
5. Partial coolant flow to radiator
6. Restricted flow to bypass
7. Flow to radiator
8. Bypass closed.

# Flow Diagram, Air Intake System

## General Information

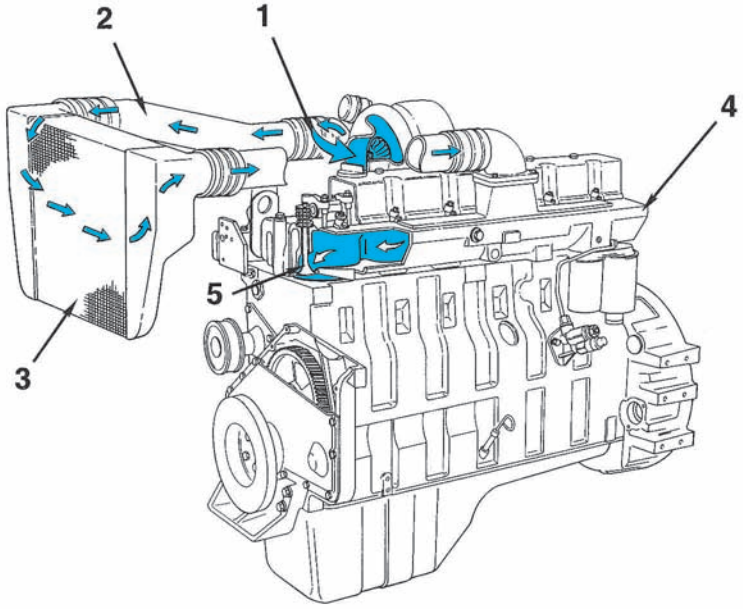


10900277

1. Intake air inlet to turbocharger
2. Turbocharger air to charge air cooler
3. Charge air cooler
4. Intake manifold - integral part of cylinder head
5. Intake valve.

# Flow Diagram, Exhaust System

## General Information

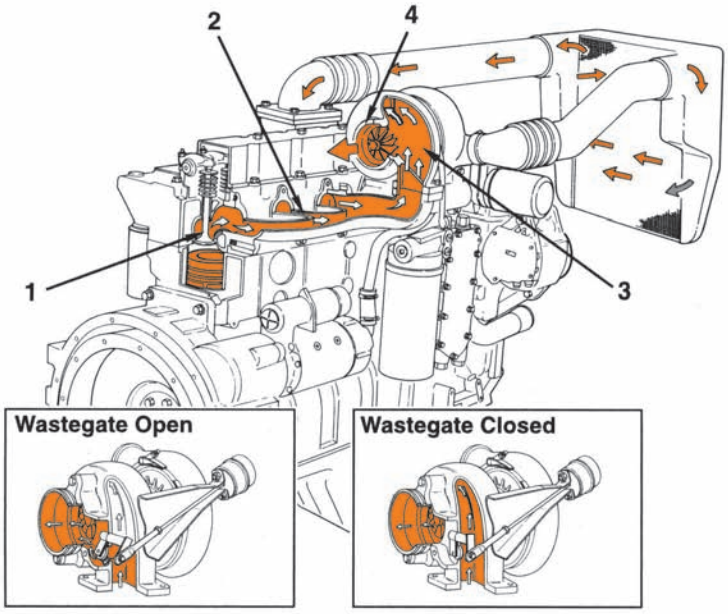


11900058

1. Exhaust valve
2. Exhaust manifold - pulse type
3. Dual entry to turbocharger
4. Turbocharger exhaust outlet.

# Flow Diagram, Compressed Air System

## General Information

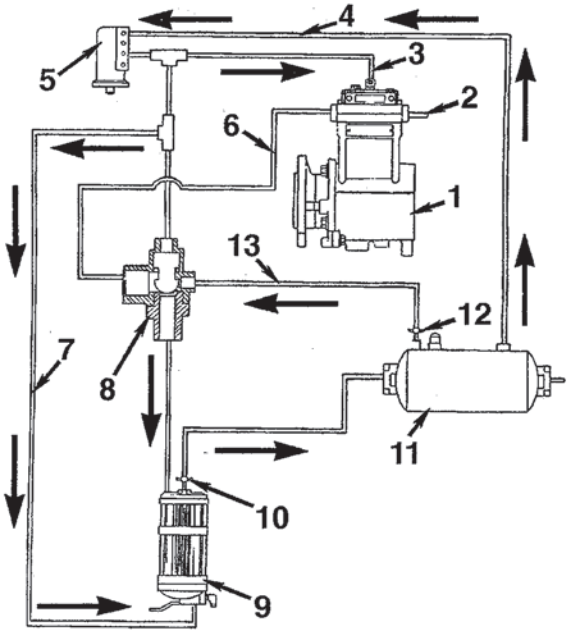


12900074

1. Compressor
2. Compressor intake
3. E-type unloader
4. Reservoir line
5. Governor
6. Discharge line
7. Splitter valve line
8. Economy valve line
9. Air dryer
10. Check valve (built into dryer)
11. Reservoir (wet tank)
12. Check valve
13. Secondary pressure line.

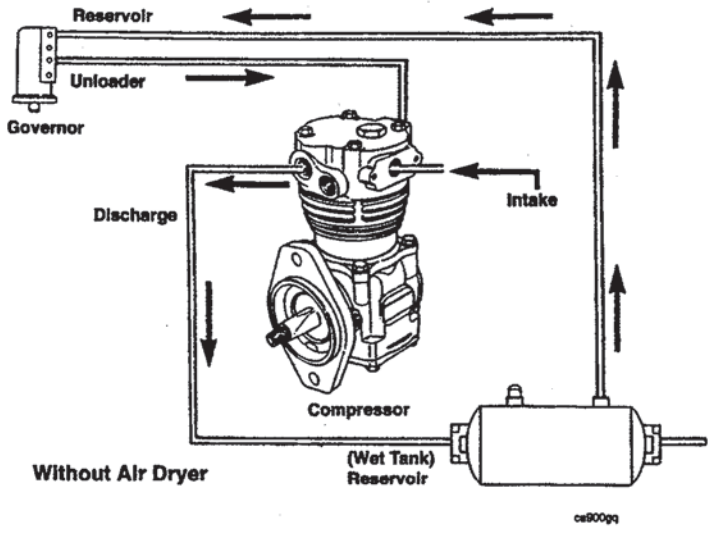
Reservoir
Unloader
Governor
Discharge
Intake
Compressor
(Wet Tank)
Reservoir
Without Air Dryer
cs900gq

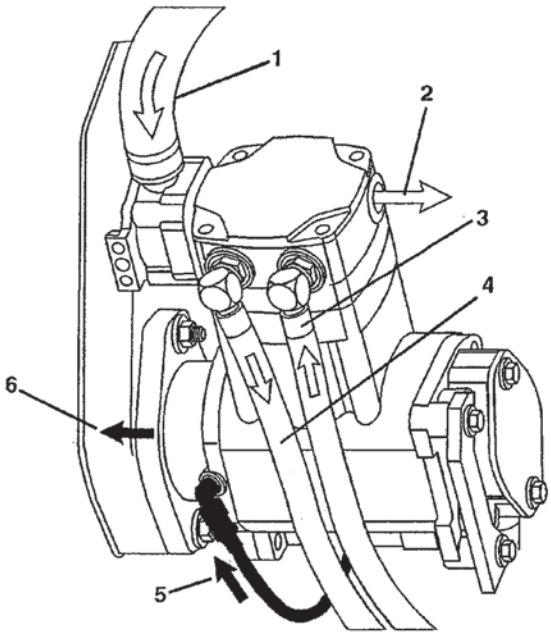


12900030

1. Air in
2. Air out
3. Coolant in
4. Coolant out
5. Lubricating oil in
6. Lubricating oil out.

# Section L - Service Literature

## Section Contents

Page

**Additional Service Literature** ..... L-1
General Information ..... L-1

**Service Literature Ordering Location** ..... L-2
Contact Information ..... L-2

THIS PAGE LEFT INTENTIONALLY BLANK

# Additional Service Literature

## General Information

The following publications can be purchased by filling in and mailing the Service Literature Order Form:

| Bulletin No. | Title of Publication |
|---|---|
| 3666003 | C Series Troubleshooting and Repair Manual (1991 engines) |
| 3666008 | C Series Engine Shop Manual (1991 engines) |
| 3666021 | C Series Specifications Manual (1991 engines) |
| 3810354 | C Series Operation and Maintenance Manual - Generator Set |
| 3810428 | C Series Operation and Maintenance Manual - Power Unit |
| 3669001 | Fuel for Cummins Engines Bulletin |
| 3666132 | Coolant Requirements and Maintenance Bulletin |
| 3379009 | Operation, Cold Weather |
| 3810340 | Cummins Engine Oil Recommendations Bulletin |

# Service Literature Ordering Location

## Contact Information

Obtain current price information from your local Cummins Distributor.

| Region | Ordering Location |
|---|---|
| United States and Canada | Cummins Distributors<br>or<br>Contact 1-800-DIESELS<br>(1-800-343-7357) |
| U.K., Europe, Mid-East, Africa, and Eastern European Countries | Cummins Engine Co., Ltd.<br>Royal Oak Way South<br>Daventry<br>Northants, NN11 5NU, England |
| South and Central America (excluding Brazil and Mexico) | Cummins Americas, Inc.<br>16085 N.W. 52nd Avenue<br>Hialeah, FL 33104 |
| Brazil and Mexico | Cummins Engine Co., Inc.<br>International Parts Order Dept., MC 40931<br>Box 3005<br>Columbus, IN 47202-3005 |
| Far East (excluding Australia and New Zealand) | Cummins Diesel Sales Corp.<br>Literature Center<br>8 Tanjong Penjuru<br>Jurong Industrial Estate<br>Singapore |

**Region**

Australia and New Zealand

**Ordering Location**

Cummins Diesel Australia
Maroondah Highway, P.O.B. 139
Ringwood 3134
Victoria, Australia

# NOTES

# Section M - Component Manufacturers

## Section Contents

| | Page |
|---|---|
| **Component Manufacturers' Addresses** | M-1 |
| Air Compressors | M-1 |
| Air Cylinders | M-1 |
| Air Heaters | M-1 |
| Air Starting Motors | M-1 |
| Alternators | M-2 |
| Auxiliary Brakes | M-2 |
| Belts | M-2 |
| Catalytic Converters | M-3 |
| Clutches | M-3 |
| Coolant Heaters | M-3 |
| Coolant Level Switches | M-3 |
| Drive Plates | M-3 |
| Electric Starting Motors | M-3 |
| Electronic Switches | M-4 |
| Engine Protection Controls | M-4 |
| Fan Clutches | M-4 |
| Fans | M-4 |
| Fault Lamps | M-4 |
| Filters | M-5 |
| Flexplates | M-5 |
| Fuel Coolers | M-5 |
| Fuel Pumps | M-5 |
| Fuel Warmers | M-5 |
| Gauges | M-5 |
| General Information | M-1 |

Page

Governors ..... M-6
Heat Sleeves ..... M-6
Hydraulic and Power Steering Pumps ..... M-6
In-Line Connectors ..... M-6
Oil Heaters ..... M-7
Prelubrication Systems ..... M-7
Radiators ..... M-7
Throttle Assemblies ..... M-7
Torque Converters ..... M-7

# Component Manufacturers' Addresses

## General Information

**NOTE:** The following list contains addresses and telephone numbers of suppliers of accessories used on Cummins engines. Suppliers can be contacted directly for any specifications **not** covered in this manual.

## Air Compressors

Bendix Heavy Vehicles Systems
Div. of Allied Automotive
901 Cleveland Street
Elyria, OH 44036
Telephone: (216) 329-9000

Holset Engineering Co., Inc.
1320 Kemper Meadow Drive
Suite 500
Cincinnati, OH 45240
Telephone: (513) 825-9600

Midland-Grau
Heavy Duty Systems
Heavy Duty Group Headquarters
10930 N. Pamona Avenue
Kansas City, MO 64153
Telephone: (816) 891-2470

## Air Cylinders

Bendix Ltd.
Douglas Road
Kingswood
Bristol
England
Telephone: 0117-671881

Catching Engineering
1733 North 25th Avenue
Melrose Park, IL 60160
Telephone: (708) 344-2334

TEC - Hackett Inc.
8909 Rawles Avenue
Indianapolis, IN 46219
Telephone: (317) 895-3670

## Air Heaters

Fleetguard, Inc.
1200 Fleetguard Road
Cookeville, TN 38502
Telephone: (615) 526-9551

Kim Hotstart Co.
P.O. Box 11245
Spokane, WA 99211-0245
Telephone: (509) 534-6171

## Air Starting Motors

Ingersoll Rand
Chorley New Road
Horwich
Bolton
Lancashire
England
BL6 6JN
Telephone: 01204-65544

Ingersoll-Rand Engine
Starting Systems
888 Industrial Drive
Elmhurst, IL 60126
Telephone: (708) 530-3875

StartMaster
Air Starting Systems
A Division of Sycon Corporation
9595 Cheney Avenue
P. O. Box 491
Marion, OH 43302
Telephone: (614) 382-5771

## Alternators

Robert Bosch Ltd.
P.O. Box 98
Broadwater Park
North Orbital Road
Denham
Uxbridge
Middlesex UD9 5HG
England
Telephone: 01895-833633

Butec Electrics
Cleveland Road
Leyland
PR5 1XB
England
Telephone: 01744-21663

C.A.V. Electrical Equipment
P.O. Box 36
Warple Way
London
W3 7SS
England
Telephone: 01-743-3111

A.C. Delco Components Group
Civic Offices
Central Milton Keynes
MK9 3EL
England
Telephone: 01908-66001

C. E. Niehoff & Co.
2021 Lee Street
Evanston, IL 60202
Telephone: (708) 866-6030

Delco-Remy America
2401 Columbus Avenue
P.O. Box 2439
Anderson, IN 46018
Telephone: (317) 646-3528

Leece-Neville Corp.
400 Main Street
Arcade, NY 14009
Telephone: (716) 492-1700

## Auxiliary Brakes

The Jacobs Manufacturing Company
Vehicle Equipment Division
22 East Dudley Town Road
Bloomfield, CT 06002
Telephone: (203) 243-1441

## Belts

Dayco Rubber U.K.
Sheffield Street
Stockport
Cheshire
SK4 1RV
England
Telephone: 061-432-5163

T.B.A. Belting Ltd.
P.O. Box 77
Wigan
Lancashire
WN2 4XQ
England
Telephone: 01942-59221

Dayco Mfg.
Belt Technical Center
1955 Enterprize
Rochester Hills, MI 48309
Telephone: (810) 853-8300

Gates Rubber Company
900 S. Broadway
Denver, CO 80217

Goodyear Tire and
Rubber Company
Industrial Products Div.
2601 Fortune Circle East
Indianapolis, IN 46241
Telephone: (317) 898-4170

## Catalytic Converters

Donaldson Company, Inc.
1400 West 94th Street
P.O. Box 1299
Minneapolis, MN 55440
Telephone: (612) 887-3835

Nelson Division
Exhaust and Filtration Systems
1801 U.S. Highway 51 P.O. Box 428
Stoughton, WI 53589
Telephone: (608) 873-4200

Walker Manufacturing
3901 Willis Road
P.O. Box 157
Grass Lake, MI 49240
Telephone: (517) 522-5500

## Coolant Level Switches

Robertshaw Controls Company
P.O. Box 400
Knoxville, TN 37901
Telephone: (216) 885–1773

## Clutches

Twin Disc International S.A.
Chaussee de Namur
Nivelles
Belguim
Telephone: 067-224941

Twin Disc Incorporated
1328 Racine Street
Racine, WI 53403
Telephone: (414) 634-1981

## Coolant Heaters

Fleetguard, Inc.
1200 Fleetguard Road
Cookeville, TN 38502
Telephone: (615) 526-9551

## Drive Plates

Detroit Diesel Allison
Division of General Motors
Corporation
P.O. Box 894
Indianapolis, IN 46206-0894
Telephone: (317) 242-5000

## Electric Starting Motors

Butec Electrics
Cleveland Road
Leyland
PR5 1XB
England
Telephone: 01744-21663

C.A.V. Electrical Equipment
P.O. Box 36
Warple Way
London
W3 7SS
England
Telephone: 01-743-3111

A.C. Delco Components Group
Civic Offices
Central Milton Keynes
MK9 3EL
England
Telephone: 0908-66001

Delco-Remy America
2401 Columbus Avenue
P.O. Box 2439
Anderson, IN 46018
Telephone: (317) 646-3528

Leece-Neville Corp.
400 Main Street
Arcade, NY 14009
Telephone: (716) 492-1700

Nippondenso Inc.
2477 Denso Drive
P.O. Box 5133
Southfield, MI 48086
Telephone: (313) 350-7500

## Electronic Switches

Cutler-Hammer Products
Eaton Corporation
4201 N. 27th Street
Milwaukee, WI 53216
Telephone: (414) 449–6600

## Engine Protection Controls

Flight Systems Headquarters
Hempt Road
P.O. Box 25
Mechanicsburg, PA 17055
Telephone: (717) 697–0333

The Nason Company
2810 Blue Ridge Blvd.
West Union, SC 29696
Telephone: (803) 638-9521

Teddington Industrial
Equipment
Windmill Road
Sunburn on Thames
Middlesex
TW16 7HF
England
Telephone: 09327-85500

## Fan Clutches

Kysor Cooling Systems N.A.
6040 West 62nd Street
Indianapolis, IN 46278
Telephone: (317) 328–3330

Holset Engineering Co. Ltd.
P.O. Box A9
Turnbridge
Huddersfield, West Yorkshire
England HD6 7RD
Telephone: 01484-22244

Horton Industries, Inc.
P.O. Box 9455
Minneapolis, MN 55440
Telephone: (612) 378-6410

Rockford Clutch Company
1200 Windsor Road
P.O. Box 2908
Rockford, IL 61132-2908
Telephone: (815) 633-7460

## Fans

Truflo Ltd.
Westwood Road
Birmingham
B6 7JF
England
Telephone: 021-557-4101

Hayes-Albion Corporation
Jackson Manufacturing Plant
1999 Wildwood Avenue
Jackson, MI 49202
Telephone: (517) 782-9421

Engineered Cooling Systems, Inc.
201 W. Carmel Drive
Carmel, IN 46032
Telephone: (317) 846-3438

Brookside Corporation
P.O. Box 30
McCordsville, IN 46055
Telephone: (317) 335-2014

TCF Aerovent Company
9100 Purdue Rd., Suite 101
Indianapolis, IN 46268-1190
Telephone: (317) 872-0030

Kysor-Cadillac
1100 Wright Street
Cadillac, MI 49601
Telephone: (616) 775-4681

Schwitzer
6040 West 62nd Street
P.O. Box 80-B
Indianapolis, IN 46206
Telephone: (317) 328-3010

## Fault Lamps

Cutler-Hammer Products
Eaton Corporation
4201 N. 27th Street
Milwaukee, WI 53216
Telephone: (414) 449–6600

## Filters

Fleetguard International Corp.
Cavalry Hill Industrial Park
Weedon
Northampton NN7 4TD
England
Telephone: 01327-41313

Fleetguard, Inc.
1200 Fleetguard Road
Cookeville, TN 38502
Telephone: 1–800–22–Filters
(1–800–223–4583)

## Flexplates

Corrugated Packing and
Sheet Metal
Hamsterley
Newcastle Upon Tyne
England
Telephone: 01207-560-505

Allison Transmission
Division of General Motors
Corporation
P.O. Box 894
Indianapolis, IN 46206-0894
Telephone: (317) 242-5000

Midwest Mfg. Co.
29500 Southfield Road, Suite 122
Southfield, MI 48076
Telephone: (313) 642-5355

Wohlert Corporation
708 East Grand River Avenue
P.O. Box 20217
Lansing, MI 48901
Telephone: (517) 485-3750

## Fuel Coolers

Hayden, Inc.
1531 Pomona Road
P.O. Box 848
Corona, CA 91718–0848
Telephone: (909) 736–2665

## Fuel Pumps

Robert Bosch Corp.
Automotive Group
2800 South 25th Ave.
Broadview, IL 60153

## Fuel Warmers

Fleetguard, Inc.
1200 Fleetguard Road
Cookeville, TN 38502
Telephone: (615) 526-9551

## Gauges

A.I.S.
Dyffon Industrial Estate
Ystrad Mynach
Hengoed
Mid Glamorgan
CF8 7XD
England
Telephone: 01443-812791

Grasslin U.K. Ltd.
Vale Rise
Tonbridge
Kent
TN9 1TB
England
Telephone: 01732-359888

Icknield Instruments Ltd.
Jubilee Road
Letchworth
Herts
England
Telephone: 04626-5551

Superb Tool and Gauge Co.
21 Princip Street
Birmingham
B4 61E
England
Telephone: 021-359-4876

Kabi Electrical and Plastics
Cranborne Road
Potters Bar
Herts
EN6 3JP
England
Telephone: 01707-53444

Datcon Instruments
P.O. Box 128
East Petersburg, PA 17520
Telephone: (717) 569-5713

Rochester Gauges, Inc.
11616 Harry Hines Blvd.
P.O. Box 29242
Dallas, TX 75229
Telephone: (214) 241-2161

## Governors

Woodward Governors Ltd.
P.O. Box 15
663/664 Ajax Avenue
Slough
Bucks
SL1 4DD
England
Telephone: 01753-26835

Woodward Governor Co.
P.O. Box 1519
Fort Collins, CO 80522
Telephone: (303) 482-5811
(800) 523-2831

Barber Colman Co.
1354 Clifford Avenue
Loves Park, IL 61132
Telephone: (815) 637-3000

United Technologies
Diesel Systems
1000 Jorie Blvd.
Suite 111
Oak Brook, IL 69521
Telephone: (312) 325-2020

## Heat Sleeves

Bentley Harris Manufacturing Co.
100 Bentley Harris Way
Gordonville, TN 38563
Telephone: (313) 348-5779

## Hydraulic and Power Steering Pumps

Hobourn Automotive
Temple Farm Works
Priory Road
Strood
Rochester
Kent, England
ME2 2BD
Telephone: 01634-71773

Honeywell Control Systems Ltd.
Honeywell House
Charles Square
Bracknell
Berks RG12 1EB
Telephone: 01344-4245

Sundstrand Hydratec Ltd.
Cheney Manor Trading Estate
Swindon
Wiltshire
SN2 2PZ
England
Telephone: 01793-30101

Sperry Vickers
P.O. Box 302
Troy, MI 48084
Telephone: (313) 280-3000

Z.F.
P.O. Box 1340
Grafvonsoden Strasse
5-9 D7070
Schwaebisch Gmuend
Germany
Telephone: 7070-7171-31510

## In-Line Connectors

Pioneer-Standard Electronics, Inc.
5440 Neiman Parkway
Solon, OH 44139
Telephone: (216) 349–1300

Deutsch
Industrial Products Division
37140 Industrial Avenue
Hemet, CA 92343
Telephone: (714) 929–1200

## Oil Heaters

Fleetguard, Inc.
1200 Fleetguard Road
Cookeville, TN 38502
Telephone: (615) 526-9551

Kim Hotstart Co.
P.O. Box 11245
Spokane, WA 99211-0245
Telephone: (509) 534-6171

## Prelubrication Systems

RPM Industries, Inc.
Suite 109
55 Hickory Street
Washington, PA 15301
Telephone: (412) 228–5130

## Radiators

JB Radiator Specialties, Inc.
P.O. Box 292087
Sacramento, CA 95829–2087
Telephone: (916) 381–4791

The G&O Manufacturing Company
100 Gando Drive
P.O. Box 1204
New Haven, CT 06505–1204
Telephone: (203) 562–5121

Young Radiator Company
2825 Four Mile Road
Racine, WI 53404
Telephone: (910) 271–2397

L and M Radiator, Inc.
1414 East 37th Street
Hibbing, MN 55746
Telephone: (218) 263–8993

## Throttle Assemblies

Williams Controls, Inc.
14100 SW 72nd Avenue
Portland, OR 97224
Telephone: (503) 684–8600

## Torque Converters

Twin Disc International S.A.
Chaussee de Namur
Nivelles
Belgium
Telephone: 067-224941

Twin Disc Incorporated
1328 Racine Street
Racine, WI 53403-1758
Telephone: (414) 634-1981

Rockford Powertrain, Inc.
Off-Highway Systems
1200 Windsor Road
P.O. Box 2908
Rockford, IL 61132-2908
Telephone: (815) 633-7460

Modine Mfg. Co.
1500 DeKoven Avenue
Racine, WI 53401
Telephone: (414) 636-1640

# NOTES

# Section S - Service Assistance

## Section Contents

| | Page |
|---|---|
| **Service Assistance** | S-1 |
| Distributors and Branches - Australia | S-22 |
| Distributors and Branches - Canada | S-19 |
| Distributors and Branches - New Zealand | S-25 |
| Distributors and Branches - United States | S-4 |
| Division and Regional Offices | S-3 |
| Emergency and Technical Service | S-1 |
| Problem Solving | S-2 |
| Routine Service and Parts | S-1 |

THIS PAGE LEFT INTENTIONALLY BLANK

# Service Assistance

## Routine Service and Parts

Personnel at Cummins Authorized Repair Locations can assist you with the correct operation and service of your engine. Cummins has a worldwide service network of more than 5,000 Distributors and Dealers who have been trained to provide sound advice, expert service, and complete parts support. Check the telephone directory yellow pages or refer to the directory in this section for the nearest Cummins Authorized Repair Location.

## Emergency and Technical Service

The Cummins Customer Assistance Center provides a 24-hour, toll free telephone number to aid in technical and emergency service when a Cummins Authorized Repair Location can **not** be reached or is unable to resolve an issue with a Cummins product.

If additional assistance is required, call Toll-Free:

1-800-DIESELS
(1-800-343-7357)

- Includes all 50 states, Bermuda, Puerto Rico, Virgin Islands, and the Bahamas.
- Outside of North America contact your Regional Office. Telephone numbers and addresses are listed in the International Directory.

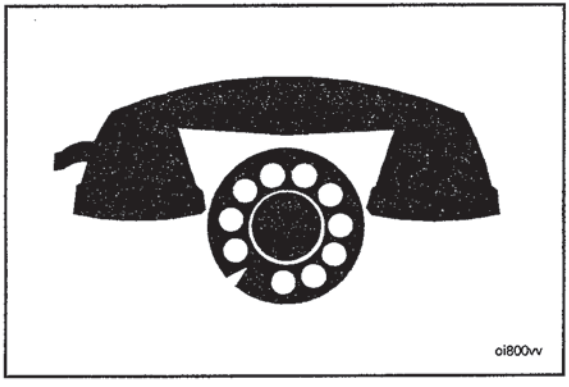

## Problem Solving

Normally, any problem that arises with the sale, service, or repair of your engine can be handled by a Cummins Authorized Repair Location in your area. Refer to the telephone directory yellow pages for the one nearest you. If the problem has **not** been handled satisfactorily, follow the steps outlined below:

1. If the disagreement is with a Dealer, talk to the Cummins Distributor with whom he has his service agreement.
2. If the disagreement is with a Distributor, call the nearest Cummins Division or Regional Office; however, most problems are solved below the Division or Regional office level. Telephone numbers and addresses are listed in this section. Before calling, write down the following information:
   a. Engine model and serial number
   b. Type and make of equipment
   c. Total kilometers [miles] or hours of operation
   d. Warranty start date
   e. Nature of problem
   f. Summary of the current problem arranged in the order of occurrence
   g. Name and location of the Cummins Distributor or Dealer
3. If a problem can **not** be resolved satisfactorily through your Cummins Authorized Repair Location or Division Office, write to:

Cummins Customer Assistance Center - 41403, Cummins Engine Company, Inc., Box 3005, Columbus, IN 47202-3005

# Division and Regional Offices

**NOTE:** The following list contains offices in U.S., Canada, Australia, New Zealand, and Puerto Rico.

## United States

### Southern Division Office
Cummins Engine Company, Inc.
425 Franklin Road S.W.
Suite 500
Marietta, GA 30067
Telephone: (770) 423-1108
FAX: (770) 499-8240

### Plains Regional Office
Cummins Engine Company, Inc.
1901 Central Drive
Suite 356
Bedford, TX 76021
Telephone: (817) 267-3172
FAX: N/A

## Canada

### Canadian Division Office
Cummins Diesel of Canada, Ltd.
5575 North Service Road
Burlington, Ontario L726M1
Telephone: (905) 331-5944
FAX: (905) 331-0276

### Western Canada Regional Office
Cummins Diesel of Canada, Ltd.
18452 - 96th Avenue
Surrey, B.C. V3T 4W2
Telephone: (604) 882-5727
FAX: (604) 882-9110

### Eastern Canada Regional Office
Cummins Diesel of Canada Ltd.
7200 Trans Canada Hwy.
Pt. Cuaire, Quebec H9R 1C0
Telephone: (514) 695-2402
FAX: (514) 695-8917

### Central Canada Regional Office
Cummins Diesel of Canada Ltd.
4887 – 35th Street SE
Calgary, Alberta T2B 3C6
FAX: (403) 569-9974

## Australia Regional Office

### Cummins Engine Company Pty. Ltd.
2 Caribbean Drive
Scoresby, Victoria 3179
Australia
Telephone: (61-3) 9765-3222
FAX: (61-3) 9763-0079

**NOTE:** This office also serves New Zealand.

## Cummins Americas Regional Office

### Cummins Latin America
3088 N. Commence Parkway
MPC #14, Building A
Miramar, FL 33025
Telephone: (305) 621-1300

**NOTE:** This office serves Puerto Rico and South America excluding Brazil.

# Distributors and Branches - United States

## Alabama

### Birmingham Distributor
Cummins Alabama, Inc.
2200 Pinson Highway
P.O. Box 1147
Birmingham, AL 35201
Telephone: (205) 841-0421
FAX: (205) 849–5926

### Mobile Branch
Cummins Alabama, Inc.
1924 N. Beltline Hwy.
Mobile, AL 36601–1598
Telephone: (334) 456-2236
FAX: (334) 452–6419

### Mobile Onan/Marine Branch
Cummins Alabama, Inc.
3422 Georgia Pacific Avenue
Mobile, AL 36617
Telephone: (334) 452-6426
FAX: (334) 473-6657

### Montgomery Branch
Cummins Alabama, Inc.
2325 West Fairview Avenue
Montgomery, AL 36108
Telephone: (205) 263-2594
FAX: (205) 263–2594

## Alaska

### Anchorage - (Branch of Seattle)
Cummins Northwest, Inc.
2618 Commercial Drive
Anchorage, AK 99501-3095
Telephone: (907) 279-7594
FAX: (907) 276-6340

## Arizona

### Phoenix Distributor and Branch
Cummins Southwest, Inc.
2239 N. Black Canyon Hgwy
Phoenix, AZ 85009
Telephone: (602) 252-8021
FAX: (602) 253–6725

### Tucson Branch
Cummins Southwest, Inc.
1912 West Prince Road
Tucson, AZ 85705
Telephone: (520) 887-7440
FAX: (520) 887–4173

## Arkansas

### Little Rock - (Branch of Memphis)
Cummins Mid-South, Inc.
6600 Interstate 30
Little Rock, AR 72209
Telephone:
Sales: (501) 569-5600
Service: (501) 569–5656
Parts: (501) 569–5613
FAX: (501) 565–2199

## California

### San Leandro Distributor
Cummins West, Inc.
14775 Wicks Blvd.
San Leandro, CA 94577–6779
Telephone: (510) 351-6101
FAX: (510) 352–3925

### Arcata Branch
Cummins West, Inc.
4801 West End Road
Arcata, CA 95521
Telephone: (707) 822–7392
FAX: (707) 822–7585

### Bakersfield Branch
Cummins West, Inc.
4601 East Brundage Lane
Bakersfield, CA 93307
Telephone: (805) 325-9404
FAX: (805) 861–8719

### Fresno Branch
Cummins West, Inc.
2740 Church Avenue
Fresno, CA 93706
Telephone: (209) 495–4745
FAX: (209) 486–7402

### Redding Branch
Cummins West, Inc.
20247 Charlanne Drive
Redding, CA 96001
Telephone: (916) 222–4070
FAX: (916) 224–4075

### Stockton Branch
Cummins West, Inc.
41 West Yokuts Avenue
Suite 131
Stockton, CA 95207
Telephone: (209) 473–0386
FAX: (209) 478–2454

### West Sacramento Branch
Cummins West, Inc.
2661 Evergreen Avenue
West Sacramento, CA 95691
Telephone: (916) 371-0630
FAX: (916) 371–2849

### Los Angeles Distributor
Cummins Cal Pacific Inc.
1939 Deere Avenue (Irvine)
Irvine, CA 92606
Telephone: (949) 253–6000
FAX: (949) 253–6080

### Montebello Branch
Cummins Cal Pacific Inc.
1105 South Greenwood Avenue
Montebello, CA 90640
Telephone: (323) 728–8111
FAX: (323) 889–7422

### Bloomington Branch
Cummins Cal Pacific Inc.
3061 S. Riverside Avenue
Bloomington, CA 92377
Telephone: (909) 877-0433
FAX: (909) 877-3787

### San Diego Branch
Cummins Cal Pacific Inc.
310 N. Johnson Avenue
El Cajon, CA 92020
Telephone: (619) 593-3093
FAX: (619) 593–0600

### Ventura Branch
Cummins Cal-Pacific Inc.
3958 Transport St.
Ventura, CA 93003
Telephone: (805) 644–7281
FAX: (805) 644–7284

## Colorado

### Denver Distributor
Cummins Rocky Mountain, Inc.
5100 East 58th Avenue
Commerce City, CO 80022
Telephone: (303) 287-0201
FAX: (303) 288–7080

### Denver Onan/Industrial Branch
Cummins Rocky Mountain, Inc.
5100 East 58th Ave.
Commerce City, CO 80022
Telephone: (303) 286-7697
FAX: (303) 287–4837

### Durango Branch
Cummins Rocky Mountain, Inc.
13595 County Road 213
Durango, CO 81301
Telephone: (970) 259–7470
FAX: (970) 259–7482

### Grand Junction Branch
Cummins Rocky Mountain, Inc.
2380 U.S. Highway 6 & 50
P.O. Box 339
Grand Junction, CO 81501
Telephone: (303) 242-5776
FAX: (303) 243–5495

## Connecticut

### Rocky Hill - (Branch of Bronx)
Cummins Metropower, Inc.
914 Cromwell Ave.
Rocky Hill, CT 06067
Telephone: (860) 529–7474
FAX: (860) 529–7524

## Florida

### Tampa Distributor
Cummins Southeastern Power, Inc.
Corporate Office
5421 N. 59th Street
Tampa, FL 33610
Telephone: (813) 621-7202
FAX: (813) 621–8250

### Ft. Myers Branch
Cummins Southeastern Power, Inc.
2671 Edison Avenue
Ft. Myers, FL 33902
Telephone: (941) 337–1211
FAX: (941) 337-5374

### Jacksonville Branch
Cummins Southeastern Power, Inc.
755 Pickettville Rd.
Jacksonville, FL 32220
Telephone: (904) 378-1902
FAX: (904) 378–1904

### Hialeah (Miami) Branch
Cummins Southeastern Power, Inc.
9900 N.W. 77th Avenue
Hialeah Gardens, FL 33016
Telephone: (305) 821-4200
FAX: (305) 557-2992

### Ocala Branch
Cummins Southeastern Power
321 Southwest 52nd Ave.
Ocala, FL 34474–1892
Telephone: (352) 861–1122
FAX: (352) 861–1130

### Orlando Branch
Cummins Southeastern Power, Inc.
4020 North
Orange Blossom Trail
Orlando, FL 32810
Telephone: (407) 298-2080
FAX: (407) 290-8727

### Tampa Branch
Cummins Southeastern Power, Inc.
5912 E. Hillsborough Avenue
Tampa, FL 33610
Telephone: (813) 626-1101
FAX: (813) 628–4183

## Georgia

### Atlanta Distributor
Cummins South, Inc.
5125 Georgia Highway 85
College Park, GA 30349
Telephone: (404) 763-0151
FAX: (404) 766–2132

### Albany Branch
Cummins South, Inc.
1915 W. Oakridge Drive
Albany, GA 31707–4938
Telephone: (912) 888-6210
FAX: (912) 883–1670

### Atlanta Branch
Cummins South, Inc.
100 University Avenue, S.W.
Atlanta, GA 30315-2202
Telephone: (404) 527-7800
FAX: (404) 527–7832

### Augusta Branch
Cummins South, Inc.
1255 New Savannah Road
Augusta, GA 30901-3891
Telephone: (706) 722-8825
FAX: (706) 722–7553

### Savannah Branch
Cummins South, Inc.
8 Interchange Court
Savannah, GA 31401–1627
Telephone: (912) 232-5565
FAX: (912) 232–5145

## Hawaii

### Kapolei Distributor
Cummins Hawaii Diesel Power, Inc.
91–230 Kalaeloa Blvd.
Kapolei, HI 96707
Telephone: (808) 682–8110
FAX: (808) 682–8477

## Idaho

### Boise - (Branch of Salt Lake City)
Cummins Intermountain, Inc.
2851 Federal Way City
Boise, ID 83705
Telephone: (208) 336-5000
FAX: (208) 338-5436

### Pocatello - (Branch of Salt Lake City)
Cummins Intermountain, Inc.
14299 Highway 30 West
Pocatello, ID 83201
Telephone: (208) 234-1661
FAX: (208) 234–1662

## Illinois

### Chicago Distributor
Cummins Northern Illinois, Inc.
7145 Santa Fe Drive
Hodgkins, IL 60525
Telephone: (708) 579-9222
FAX: (708) 352-7547

### Bloomington-Normal – (Branch of Indianapolis)
Cummins Mid-States Power, Inc.
(at U.S. 51 N and I-55)
414 W. Northtown Road
Bloomington-Normal, IL 61761
Telephone: (309) 452-4454
FAX: (309) 452–1642

### Onan Branch
Cummins/Onan Northern Illinois
8745 W. 82nd Place
Justin, IL 60458
Telephone: (708) 563–7070
FAX: (708) 563–7095

### Harrisburg (Branch of St. Louis)
Cummins Gateway, Inc.
Highway 45 North
Harrisburg, IL 62946
Telephone: (618) 273-4138
FAX: (618) 273–4531

### Rock Island - (Branch of Omaha)
Cummins Great Plains Diesel, Inc.
7820 - 42nd Street West
Rock Island, IL 61204
Telephone: (309) 787-4300
FAX: (309) 787–4397

### Onan Branch
Cummins Gateway, Inc.
#1 Extra Mile Drive
Collinsville, IL 62234
Telephone: (618) 345–0123
FAX: (314) 531–6604

## Indiana

### Indianapolis Distributor
Cummins Mid-States Power, Inc.
P.O. Box 42917
3762 West Morris Street
Indianapolis, IN 46242-0917
Telephone: (317) 243-7979
FAX: (317) 240–1925

### Evansville - (Branch of Louisville)
Cummins Cumberland, Inc.
7901 Highway 41 North
Evansville, IN 47711
Telephone: (812) 867-4400
FAX: (812) 421–3282

### Ft. Wayne Branch
Cummins Mid-States Power, Inc.
3415 Coliseum Blvd. West
(At Jct. I-69 & 30/33)
Ft. Wayne, IN 46808
Telephone: (219) 482-3691
FAX: (219) 484–8930

### Gary - (Branch of Chicago)
Cummins Northern Illinois, Inc.
1440 Texas Street
Gary, IN 46402
Telephone: (219) 885-5591
FAX: (219) 883-4817

### Indianapolis Branch
Cummins Mid-States Power, Inc.
P. O. Box 42917
3621 West Morris Street
Indianapolis, IN 46242-0917
Telephone: (317) 244-7251
FAX: (317) 240–1215

### Onan Branch
Mid-States Power, Inc.
4301 W. Morris Street
P.O. Box 42917
Indianapolis, IN 46240–0917
Telephone: (317) 240–1967
FAX: (317) 240–1975

## Iowa

### Cedar Rapids - (Branch of Omaha)
Cummins Great Plains Diesel, Inc.
625 - 33rd Avenue SW
Cedar Rapids, IA 52406
Telephone: (319) 366-7537 (24 hours)
FAX: (319) 366–7562

### Des Moines - (Branch of Omaha)
Cummins Great Plains Diesel, Inc.
1680 N.E. 51st Avenue
P.O. Box B
Des Moines, IA 50313
Telephone: (515) 262-9591
Parts: (515) 262-9744
FAX: (515) 262–0626

### Des Moines - (Branch of Omaha)
Midwestern Power Products
Division of Cummins Great Plains Diesel, Inc.
5194 N.E. 17th Street
Des Moines, IA 50313
Telephone: (515) 264-1650
FAX: (515) 264-1651

## Kansas

### Colby - (Branch of Kansas City, Missouri)
Cummins Mid-America, LLC.
1880 South Range
Colby, KS 67701
Telephone: (785) 462-3945
FAX: (785) 462-3970

### Garden City - (Branch of Kansas City, Missouri)
Cummins Mid-America, Inc.
1285 Acraway
Garden City, KS 67846
Telephone: (316) 275-2277
FAX: (316) 275–2533

### Wichita - (Branch of Kansas City, Missouri)
Cummins Mid-America, Inc.
5101 North Broadway
Wichita, KS 67201
Telephone: (316) 838-0875
FAX: (316) 838–0704

## Kentucky

### Louisville Distributor
Cummins Cumberland, Inc.
(Corporate Office)
2301 Nelsonville Parkway
Louisville, KY 40223
Telephone: (502) 254-3363
FAX: (502) 254–9272

### Hazard Branch
Cummins Cumberland, Inc.
Highway 15 South
P.O. Box 510
Hazard, KY 41701
Telephone: (606) 436-5718
FAX: (606) 436–5038

### Louisville Branch
Cummins Cumberland, Inc.
9820 Bluegrass Parkway
Louisville, KY 40299
Telephone: (502) 491-4263
FAX: (502) 499–0896

## Louisiana

### Morgan City - (Branch of Memphis)
Cummins Mid-South, Inc.
Hwy. 90 East
P.O. Box 1229
Amelia, LA 70340
Telephone: (504) 631-0576
FAX: (504) 631–0081

### New Orleans - (Branch of Memphis)
Cummins Mid-South, Inc.
110 E. Airline Highway
Kenner, LA 70062
Telephone: (504) 468-3535
FAX: (504) 465–3408

## Maine

### Bangor (Branch of Boston)
Cummins Northeast, Inc.
221 Hammond Street
Bangor, ME 04401
Telephone: (207) 941-1061
FAX: (207) 945–3170

### Scarborough - (Branch of Boston)
Cummins Northeast, Inc.
10 Gibson Road
Scarborough, ME 04074
Telephone: (207) 883-8155
FAX: (207) 883–5526

## Maryland

### Baltimore Distributor
Cummins Power Systems, Inc.
1907 Parkwood Drive
MD 21061
Telephone: (410) 590–8700
FAX: (410) 590–8723

## Massachusetts

### Boston Distributor
Cummins Northeast, Inc.
100 Allied Drive
Dedham, MA 02026
Telephone: (781) 329-1750
FAX: (781) 329–4428

### Springfield Branch
Cummins Northeast, Inc.
177 Rocus Street
Springfield, MA 01104
Telephone: (413) 737-2659
FAX: (413) 731–1082

## Mexico

### Tijuana - (Branch of Los Angeles)
Distribuidora Cummins De Baja
Blvd. 3ra. Oeste No. 17523
Fracc. Industrial
Garita de Otay C.P. 22400
Tijuana, Baja California
Mexico
Telephone: 011–52–66–238433
FAX: 011–52–66–238649

## Michigan

### Detroit (Novi) Distributor
Cummins Michigan, Inc.
41216 Vincenti Court
Novi, MI 48375
Telephone: (248) 478-9700
FAX: (248) 478-1570

### Blissfield, Michigan
Diesel Fuel Systems, Inc.
Subsidiary of Cummins Michigan Inc.
211 N. Jipson Street
Blissfield, MI 49228
Telephone: (517) 486-4324
FAX: (517) 486-3614

### Dearborn Branch
Cummins Michigan, Inc.
3760 Wyoming Avenue
Dearborn, MI 48120
Telephone: (313) 843-6200
FAX: (313) 843-6070

### Grand Rapids Branch
Cummins Michigan, Inc.
3715 Clay Avenue, S.W.
Grand Rapids, MI 49508
Telephone: (616) 538-2250
FAX: (616) 538-3830

### Grand Rapids Branch
Standby Power, Inc.
7580 Expressway Drive S.W.
Grand Rapids, MI 49548
Telephone: (616) 281-2211
FAX: (616) 281-3177

### Iron Mountain - (Branch of De Pere)
Cummins Great Lakes, Inc.
1901 Stevenson Avenue
Iron Mountain, MI 49801
Telephone: (906) 774-2424
(800) 236-2424
FAX: (906) 774-1190

### Novi Branch
Cummins Michigan, Inc.
25100 Novi Road
Novi, MI 48375
Telephone: (248) 380-4300
FAX: (248) 380-0910

### Power Products (Branch of Detroit)
Cummins Michigan, Inc.
41326 Vincenti Ct.
Novi, MI 48375
Telephone: (248) 426-9300
FAX: (248) 473-8560

### Saginaw Branch
Cummins Michigan, Inc.
722 N. Outer Drive
Saginaw, MI 48605
Telephone: (517) 752-5200
FAX: (517) 752-4194

### Standby Power - (Branch of Detroit)
Cummins Michigan, Inc.
12130 Dixie
Redford, MI 48239
Telephone: (313) 538-0200
FAX: (313) 538-3966

## Minnesota

### St. Paul Distributor
Cummins North Central, Inc.
3030 Centre Pointe Drive
Suite 500
Roseville, MN 55113
Telephone: (651) 636-1000
FAX: (651) 638-2442

### Duluth Branch
Cummins Diesel Sales, Inc.
3115 Truck Center Drive
Duluth, MN 55806–1786
Telephone: (218) 628-3641
FAX: (218) 628–0488

### St. Paul Branch
Cummins North Central, Inc.
2690 Cleveland Ave. North
St. Paul, MN 55113
Telephone: (651) 636-1000
FAX: (651) 638-2497

## Mississippi

### Jackson - (Branch of Memphis)
Cummins Mid-South, Inc.
325 New Highway 49 South
Jackson, MS 39288-4224
Telephone:
Admin.: (601) 932-7016
Parts: (601) 932-2720
Service: (601) 939-1800
FAX: (601) 932–7399

## Missouri

### Kansas City Distributor and Branch
Cummins Mid-America, Inc.
8201 NE Parvin Road
Kansas City, MO 64161
Telephone: (816) 414–8200
FAX: (816) 414–8299

### Joplin Branch
Cummins Mid-America, Inc.
3507 East 20th Street
Joplin, MO 64801
Telephone: (417) 623-1661
FAX: (417) 623–1817

### Springfield Branch
Cummins Mid-America, Inc.
3637 East Kearney
Springfield, MO 65803
Telephone: (417) 862-0777
FAX: (417) 862-4429

### St. Louis Distributor
Cummins Gateway, Inc.
7210 Hall Street
St. Louis, MO 63147
Telephone: (314) 389-5400
FAX: (314) 389–9671

### Columbia Branch
Cummins Gateway, Inc.
5221 Highway 763 North
Columbia, MO 65202
Telephone: (314) 449-3711
FAX: (314) 449–3712

### Sikeston Branch
Cummins Gateway, Inc.
101 Keystone Drive
Sikeston, MO 63801
Telephone: (314) 472-0303
FAX: (314) 472–0306

### Industrial Power Branch
Cummins Gateway, Inc.
3256 E. Outer Road
Scott City, MO 63788
Telephone: (573) 335-9399
FAX: (573) 335-7062

## Montana

### Billings - (Branch of Denver)
Cummins Rocky Mountain, Inc.
5151 Midland Road
Billings, MT 59101
Telephone: (406) 245-4194
FAX: (406) 245–7923

### Great Falls - (Branch of Denver)
Cummins Rocky Mountain, Inc.
415 Vaughn Road
Great Falls, MT 59404
Telephone: (406) 452-8561
FAX: (406) 452–9911

### Missoula - (Branch of Seattle)
Cummins Northwest, Inc.
4950 North Reserve Street
Missoula, MT 59802-1498
Telephone: (406) 728-1300
FAX: (406) 728-8523

## Nebraska

### Omaha Distributor and Branch
Cummins Great Plains Diesel, Inc.
5515 Center Street
P.O. Box 6068
Omaha, NE 68106
Telephone: (402) 551-7678 (24 Hours)
FAX: (402) 551–1952

### Kearney Branch
Cummins Great Plains Diesel, Inc.
515 Central Avenue
Kearney, NE 68847
Telephone: (308) 234-1994
FAX: (308) 234–5776

## Nevada

### Elko - (Branch of Salt Lake City)
Cummins Intermountain, Inc.
5370 East Idaho Street
Elko, NV 89801
Telephone: (775) 738-6405
FAX: (775) 738–1719

### Las Vegas - (Branch of Salt Lake City)
Cummins Intermountain, Inc.
2750 Losee Road
North Las Vegas, NV 89030
Telephone: (702) 399-2339
FAX: (702) 399–7457

### Sparks - (Branch of Salt Lake City)
Cummins Intermountain, Inc.
150 Glendale Avenue
Sparks, NV 89431
Telephone: (775) 331-4983
FAX: (775) 331–7429

## New Jersey

### Newark - (Branch of Bronx)
Cummins Metropower, Inc.
41-85 Doremus Ave.
Newark, NJ 07105
Telephone: (973) 491–0100
FAX: (973) 578–8873

## New Mexico

### Albuquerque - (Branch of Phoenix)
Cummins Southwest, Inc.
1921 Broadway N.E.
Albuquerque, NM 87102
Telephone: (505) 247-2441
FAX: (505) 842–0436

### Farmington - (Branch of Phoenix)
Cummins Southwest, Inc.
1101 North Troy King Road
Farmington, NM 87401
Telephone: (505) 327-7331
FAX: (505) 326–2948

## New York

### Bronx Distributor
Cummins Metropower, Inc.
890 Zerega Avenue
Bronx, NY 10473
Telephone: (718) 892-2400
FAX: (718) 892–0055

### Albany - (Branch of Boston)
Cummins Northeast, Inc.
101 Railroad Avenue
Albany, NY 12205
Telephone: (518) 459-1710
FAX: (518) 459–7815

### Buffalo - (Branch of Boston)
Cummins Northeast, Inc.
480 Lawrence Bell Dr.
Williamsville, NY 14221-7090
Telephone: (716) 631-3211
FAX: (716) 626–0799

### Syracuse - (Branch of Boston)
Cummins Northeast, Inc.
29 Eastern Avenue
Syracuse, NY 13211
Telephone: (315) 437-2751
FAX: (315) 437-8141

## North Carolina

### Charlotte Distributor
Cummins Atlantic, Inc.
11101 Nations Ford Road (28273)
P.O. Box 240729
Charlotte, NC 28224-0729
Telephone: (704) 588-1240
FAX: (704) 587-4870

### Charlotte Branch
Cummins Atlantic, Inc.
3700 North Interstate 85
Charlotte, NC 28206
Telephone: (704) 596-7690
FAX: (704) 596–3038

### Greensboro Branch
Cummins Atlantic, Inc.
513 Preddy Boulevard (27406)
P.O. Box 22066
Greensboro, NC 27420-2066
Telephone: (336) 275-4531
FAX: (336) 275–8304

### Wilson Branch
Cummins Atlantic, Inc.
1514 Cargill Avenue (27893)
P.O. Box 1177
Wilson, NC 27894-1117
Telephone: (252) 237-9111
FAX: (252) 237–9132

## North Dakota

### Fargo - (Branch of St. Paul)
Cummins North Central, Inc.
3801 - 34th Ave. SW
Fargo, ND 58104
Telephone: (701) 282-2466
FAX: (701) 277–5399

### Grand Forks - (Branch of St. Paul)
Cummins North Central, Inc.
4728 Gateway Drive
Grand Forks, ND 58201
Telephone: (701) 775-8197
FAX: (701) 775–4833

### Minot - (Branch of St. Paul)
Cummins North Central, Inc.
1501 - 20th Avenue, S.E.
Minot, ND 58702
Telephone: (701) 852-3585
FAX: (701) 852–3588

## Ohio

### Columbus Distributor and Branch
Cummins Interstate Power, Inc.
4000 Lyman Drive
Hilliard (Columbus), OH 43026
Telephone: (614) 771-1000
FAX: (614) 771–0769

### Columbus Distributor
Cummins Interstate Power, Inc.
2297 Southwest Bldv., Suite K
Grove City, OH 43123
Telephone: (614) 771-1000
FAX: (614) 527-2576

### Cincinnati Branch
Cummins Interstate Power, Inc.
10470 Evendale Drive
Cincinnati, OH 45241
Telephone: (513) 563-6670
FAX: (513) 563–0594

### Cleveland Branch
Cummins Interstate Power, Inc.
7585 Northfield Road
Cleveland, OH 44146
Telephone: (440) 439-6800
FAX: (440) 439–7390

### Strasburg Branch
Cummins Interstate Power, Inc.
777 South Wooster Avenue
Strasburg, OH 44680
Telephone: (216) 878-5511
FAX: (216) 878–7666

### Toledo Branch
Cummins Interstate Power, Inc.
801 Illinois Avenue
Maumee
(Toledo), OH 43537
Telephone: (419) 893-8711
FAX: (419) 893–5362

### Youngstown Branch
Cummins Interstate Power, Inc.
7145 Masury Road
Hubbard
(Youngstown), OH 44425
Telephone: (216) 534-1935
FAX: (216) 534–5606

## Oklahoma

### Oklahoma City - (Branch of Arlington)
Cummins Southern Plains, Inc.
5800 West Reno
Oklahoma City, OK 73127
Telephone: (405) 946-4481 (24 hours)
FAX: (405) 946–3336

### Tulsa - (Branch of Arlington)
Cummins Southern Plains, Inc.
16525 East Skelly Drive
Tulsa, OK 74116
Telephone: (918) 234–3240
FAX: (918) 234–2342

## Oregon

### Bend - (Branch of Seattle)
Cummins Northwest, Inc.
3500 N. Highway 97 (97701-5729)
P.O. Box 309
Bend, OR 97709-0309
Telephone: (541) 389-1900
FAX: (541) 389–1909

### Coburg/Eugene - (Branch of Seattle)
Cummins Northwest, Inc.
91201 Industrial Parkway
Coburg, OR 97401
(Mailing Address)
P.O. Box 10877
Eugene, OR 97440-2887
Telephone: (541) 687-0000
FAX: (541) 687–1977

### Medford - (Branch of Seattle)
Cummins Northwest, Inc.
4045 Crater Lake Highway
Medford, OR 97504-9796
Telephone: (541) 779-0151
FAX: (541) 772–2395

### Pendleton - (Branch of Seattle)
Cummins Northwest, Inc.
223 S.W. 23rd Street
Pendleton, OR 97801-1810
Telephone: (541) 276-2561
FAX: (541) 276-2564

### Portland - (Branch of Seattle)
Cummins Northwest, Inc.
4711 N. Basin Avenue
P. O. Box 2710 (97208-2710)
Portland, OR 97217-3557
Telephone: (503) 289-0900
FAX: (503) 286-5938

## Pennsylvania

### Philadelphia Distributor
Cummins Power Systems, Inc.
2727 Ford Road
Bristol, PA 19007
Telephone: (215) 785-6005 and
(609) 563–0005
FAX: (215) 785-4085

### Bristol Branch
Cummins Power Systems, Inc.
2727 Ford Road
Bristol, PA 19007
Telephone: (215) 785-6005 and
(609) 563–0005
FAX: (215) 785–4728

### Pittsburgh Branch
Cummins Power Systems, Inc.
3 Alpha Drive
Pittsburgh, PA 15238–2901
Telephone: (412) 820–8300
FAX: (412) 820–8308

### Harrisburg Branch
Cummins Power Systems, Inc.
4499 Lewis Road
Harrisburg, PA 17111-2541
Telephone: (717) 564-1344
FAX: (717) 558-8217

## Puerto Rico

### Puerto Nuevo - (Branch of Tampa)
Cummins Diesel Power, Inc.
#31 Calle “C”
El Matadero
Puerto Nuevo, Puerto Rico 00920
Telephone: (787) 793–0300
FAX: (787) 793–1072

## South Carolina

### Charleston - (Branch of Charlotte)
Cummins Atlantic, Inc.
3028 West Montague Avenue
Charleston, SC 29418–5593
Telephone: (843) 554-5112
FAX: (843) 745–0745

### Charleston - (Branch of Charlotte)
Cummins Atlantic Inc.
231 Farmington Road
Charleston, SC 29483
Telephone: (843) 851-9819
FAX: (843) 875–4338

### Columbia - (Branch of Charlotte)
Cummins Atlantic, Inc.
1233 Bluff Road (29201)
P.O. Box 13543
Columbia, SC 29201–3543
Telephone: (803) 799-2410
FAX: (803) 779–3427

## South Dakota

### Sioux Falls - (Branch of Omaha)
Cummins Great Plains Diesel, Inc.
701 East 54th Street North
Sioux Falls, SD 57104
Telephone: (605) 336-1715
FAX: (605) 336–1748

## Tennessee

### Memphis Distributor & Distribution Center
Cummins Mid-South, Inc.
666 Riverside Drive
Memphis, TN 38703
Telephone: (901) 577-0666
FAX: (901) 522–8758

### Chattanooga - (Branch of Atlanta)
Cummins South, Inc.
1509 East 26th Street
Chattanooga, TN 37407-1095
Telephone: (615) 629-1447
FAX: (615) 629–1494

### Knoxville - (Branch of Louisville)
Cummins Cumberland, Inc.
1211 Ault Road
Knoxville, TN 37914
Telephone: (423) 523-0446
FAX: (423) 523-0343

### Memphis Branch
Cummins Mid-South, Inc.
1784 E. Brooks Road
Memphis, TN 38116
Telephone:
Sales/Admin.: (901) 345-7424
Parts: (901) 345-1784
Service: (901) 345-6185
FAX: (901) 346–4735

### Nashville - (Branch of Louisville)
Cummins Cumberland, Inc.
706 Spence Lane
Nashville, TN 37217
Telephone: (615) 366-4341
FAX: (615) 366–5693

## Texas

### Arlington Distributor
Cummins Southern Plains, Inc.
600 N Watson Road
Arlington, TX 76004-3027
Telephone: (817) 640-6801
FAX: (817) 640-6852

### Amarillo Branch
Cummins Southern Plains, Inc.
5224 Interstate 40 -
Expressway East
P.O. Box 31570
Amarillo, TX 79120-1570
Telephone: (806) 373-3793 (24 hours)
FAX: (806) 372–8547

### Dallas Branch
Cummins Southern Plains, Inc.
3707 Irving Boulevard
Dallas, TX 75247
Telephone: (214) 631-6400 (24 hours)
FAX: (214) 631–2322

### El Paso - (Branch of Phoenix)
Cummins Southwest, Inc.
14333 Gateway West
El Paso, TX 79927
Telephone: (915) 852-4200
FAX: (915) 852-3295

### Fort Worth Branch
Cummins Southern Plains, Inc.
3250 North Freeway
Fort Worth, TX 76111
Telephone: (817) 624-2107 (24 hours)
FAX: (817) 624–3296

### Houston Branch
Cummins Southern Plains, Inc.
4750 Homestead Road
P.O. Box 1367
Houston, TX 77251-1367
Telephone: (713) 675-7421 (24 hours)
FAX: (713) 675–1515

### Mesquite Branch
Cummins Southern Plains, Inc.
2615 Big Town Blvd.
Mesquite, TX 75150
Telephone: (214) 321-5555 (24 hours)
FAX: (214) 328–2732

### Odessa Branch
Cummins Southern Plains, Inc.
1210 South Grandview
P.O. Box 633
Odessa, TX 79760-0633
Telephone: (915) 332-9121 (24 hours)
FAX: (915) 333–4655

### San Antonio Branch
Cummins Southern Plains, Inc.
6226 Pan Am Expressway North
P.O. Box 18385
San Antonio, TX 78218–0385
Telephone: (512) 655-5420 (24 hours)
FAX: (512) 655–3865

### Houston Onan Branch
Southern Plains Power
A Division of Cummins Southern Plains
1155 West Loop North
Houston, TX 77055
Telephone: (713) 956-0020
FAX: (713) 956-0266

## Utah

### Salt Lake City Distributor
Cummins Intermountain, Inc.
1030 South 300 West
Salt Lake City, UT 84101
Telephone: (801) 355-6500
FAX: (801) 524–1351

### Vernal Branch
Cummins Intermountain, Inc.
1435 East 335 South
Vernal, UT 84078
Telephone: (435) 789-5732
FAX: (435) 789-2853

## Virginia

### Cloverdale - (Branch of Charlotte)
Cummins Atlantic, Inc.
263 Simmons Drive
Cloverdale, VA 24077
Telephone: (540) 966-3169
FAX: (540) 966-3749

### Richmond - (Branch of Charlotte)
Cummins Atlantic, Inc.
3900 Deepwater Terminal Road
Richmond, VA 23234
Telephone: (804) 232-7891
FAX: (804) 232-7428

### Tidewater - (Branch of Charlotte)
Cummins Atlantic, Inc.
Atlantic Power Generation
3729 Holland Blvd.
Chesapeake, VA 23323
Telephone: (757) 485-4848
FAX: (757) 485-5085

## Washington

### Seattle Distributor
Cummins Northwest, Inc.
811 S.W. Grady Way (98055-2944)
P.O. Box 9811
Renton, WA 98057–9811
Telephone: (425) 235-3400
FAX: (425) 235–8202

### Chehalis Branch
Cummins Northwest, Inc.
926 N.W. Maryland
Chehalis, WA 98532-0339
Telephone: (360) 748-8841
FAX: (360) 748–8843

### Spokane Branch
Cummins Northwest, Inc.
11134 W. Westbow Blvd.
Spokane, WA 99204
Telephone: (509) 455–4411
FAX: (509) 624–4681

### Tacoma Branch
Cummins Northwest, Inc.
3701 Pacific Highway East
Tacoma, WA 98424-1135
Telephone: (253) 922-2191
FAX: (253) 922–2379

### Yakima Branch
Cummins Northwest, Inc.
1905 East Central Avenue (98901-3609)
P.O. Box 9129
Yakima, WA 98909-0129
Telephone: (509) 248-9033
FAX: (509) 248–9035

## West Virginia

### Charleston - (Branch of Louisville)
Cummins Cumberland, Inc.
3100 MacCorkle Ave. SW
P.O. Box 8456
South Charleston, WV 25303
Telephone: (304) 744-6373
FAX: (304) 744-8605

### Fairmont - (Branch of Louisville)
Cummins Cumberland, Inc.
South Fairmount Exit, I-79
145 Middletown Road
Fairmont, WV 26554
Telephone: (304) 367-0196
FAX: (304) 367–1077

## Wisconsin

### DePere Distributor
Cummins Great Lakes, Inc.
Corporate Office
875 Lawrence Drive
P.O. Box 5070
DePere, WI 54115–5070
Telephone: (920) 337-1991
FAX: (920) 337-9746

### Chippewa Falls Branch
Cummins Great Lakes, Inc.
2030 St. Highway 53
Chippewa Falls, WI 54729
Telephone: (715) 720-0680
FAX: (715) 720–0685

### DePere Branch
Cummins Great Lakes, Inc.
939 Lawrence Drive
P. O. Box 5070
DePere, WI 54115–5070
Telephone: (920) 336-9631
(800) 236–1191
FAX: (920) 336–8984

### Milwaukee Branch
Cummins Great Lakes, Inc.
9401 South 13th Street
P.O. Box D
Oak Creek, WI 53154
Telephone: (414) 768-7400
(800) 472-8283
FAX: (414) 768-9441

### Wausau Branch
Cummins Great Lakes, Inc.
4703 Rib Mountain Drive
Wausau, WI 54401
Telephone: (715) 359-6888
(800) 236-3744
FAX: (715) 359-3744

## Wyoming

### Gillette - (Branch of Denver)
Cummins Rocky Mountain, Inc.
2700 Hwy. 14 & 16 North
P.O. Box 1207 (82717)
Gillette, WY 82716
Telephone: (307) 682-9611
FAX: (307) 682–8242

### Rock Springs - (Branch of Salt Lake City)
Cummins Intermountain, Inc.
2000 Foothill Blvd.
P.O. Box 1634
Rock Springs, WY 82901
Telephone: (307) 362-5168
FAX: (307) 362–5171

# Distributors and Branches - Canada

## Alberta

### Edmonton Distributor and Branch
Cummins Alberta
11751 - 181 Street
Edmonton, AB T5S 2K5
Telephone: (780) 455-2151
FAX: (780) 454-9512

### Calgary Branch
Cummins Alberta
4887 - 35th Street S.E.
Calgary, Alberta T2B 3H6, Canada
Telephone: (403) 569-1122
FAX: (403) 569-0027

### Grande Prairie
Cummins Alberta - Grande Praire
RR2, Site 9, Box 22
Sexsmith, AB CN T0H 3C0
Telephone: (780) 568-3359
FAX: (780) 568-2263

### Hinton Branch
Cummins Alberta
135 Veats Avenue
Hinton, Alberta T7V 1S8, Canada
Telephone: (780) 865-5111
FAX: (780) 865-5714

### Lethbridge Branch
Cummins Alberta
240 - 24th Street North
Lethbridge, Alberta T1H 3T8, Canada
Telephone: (403) 329-6144
FAX: (403) 320-5383

## British Columbia

### Vancouver Distributor
Cummins British Columbia
18452 - 96th Avenue
Surrey, B.C., Canada
V4N 3P8
Telephone: (604) 882-5000
FAX: (604) 882-5080

### Kamloops Branch
Cummins British Columbia
976 Laval Crescent
Kamloops, B.C. Canada V2C 5P5
Telephone: (250) 828-2388
FAX: (250) 828-6713

### Prince George Branch
Cummins British Columbia
102- 3851- 18th Avenue
Prince George, B.C. V2N 1B1
Telephone: (250) 564-9111
FAX: (250) 564-5853

### Sparwood Branch
Cummins British Columbia
731 Douglas Fir Road
Sparwood, B.C. VOB 2GO, Canada
Telephone: (250) 425-0522
FAX: (250) 425–0323

### Tumbler Ridge Branch
Cummins British Columbia
Industrial Site, Box 226
Tumbler Ridge, B.C.
Canada VOC 2WO
Telephone: (250) 242-4217
FAX: (250) 242–4906

## Manitoba

### Winnipeg Distributor
Cummins Mid-Canada Ltd.
489 Oak Point Road
P.O. Box 1860
Winnipeg, MB R3C 3R1, Canada
Telephone: (204) 632-5470
FAX: (204) 697–0267

## New Brunswick

### Fredericton - (Branch of Montreal)
Cummins Eastern Canada, Inc.
R.R.#1 Doak Road
P.O. Box 1178, Station 'A'
Fredericton,
New Brunswick E3B 4X2, Canada
Telephone: (506) 451-1929
FAX: (506) 451-1921

## Newfoundland

### St. John's - (Branch of Montreal)
Cummins Eastern Canada, Inc.
122 Clyde Avenue
Donovans Industrial Park
Mount Pearl, Newfoundland A1N 2C2
Canada
Telephone: (709) 747-0176
FAX: (709) 747–2283

### Wabush - (Branch of Montreal)
Cummins Eastern Canada, Inc.
Wabush Industrial Park
Wabush, Newfoundland A0R 1B0
Telephone: (709) 282-3626
FAX: (709) 282–3108

## Nova Scotia

### Halifax - (Branch of Montreal)
Cummins Eastern Canada, Inc.
50 Simmonds Drive
Dartmouth, Nova Scotia B3B 1R3
Telephone: (902) 468-7938
FAX: (902) 468–5177
Parts: (902) 468–6560

## Ontario

### Toronto Distributor
Cummins Ontario, Inc.
7175 Pacific Circle
Mississauga, ON L5T 2A5
Telephone: (905) 795–0050
FAX: (905) 795–0021

### Kenora - (Branch of Winnipeg)
Cummins Mid-Canada Ltd.
Highway 17 East
P.O. Box 8
Kenora, Ontario P9N 3X1
Telephone: (807) 548–1941
FAX: (807) 548–8302

### Ottawa Branch
Cummins Ontario Inc.
3189 Swansea Crescent
Ottawa, Ontario K1G 3W5,
Telephone: (613) 736-1146
FAX: (613) 736-1202

### Thunder Bay Branch
Cummins Ontario Inc.
1400 W. Walsh Street
Thunder Bay
Ontario P7E 4X4
Telephone: (807) 577-7561
FAX: (807) 577–1727

### Whitby Branch
Cummins Ontario Inc.
1311 Hopkins Street
Whitby, Ontario L1N 2C2, Canada
Telephone: (905) 668-6886
FAX: (905) 668-1375

## Quebec

### Montreal Distributor
Cummins Eastern Canada, Inc.
7200 Trans Canada Highway
Pointe Claire, Quebec H9R 1C2,
Telephone: (514) 695-8410
FAX: (514) 695–8917

### Montreal Branch
Cummins Eastern Canada, Inc.
7200 Trans Canada Highway
Pointe Claire, Quebec H9R 1C2,
Canada
Telephone: (514) 695-8410
Sales: (514) 695-4555
Parts: (514) 694-5880
FAX: (514) 695–8917

### Dorval Onan Branch
Cummins, Eastern Canada, Inc.
580 Lepihe
Dorval, Quebec H9H 1G2
Telephone: (514) 631-5000
FAX: (514) 631-0104

### Quebec City Branch
Cummins Diesel
Branch of Cummins Americas, Inc.
2575 Dalton Street
Ste. Foy, Quebec G1P 3S7
Telephone: (418) 653-6411
FAX: (418) 653-5844

### Val D'Or Branch
Cummins, Eastern Canada, Inc.
1025 Rue Del
Val D'Or, Quebec 59P 4P6
Telephone: (819) 825-0993
FAX: (819) 825-8488

## Saskatchewan

### Lloydminster - (Branch of Winnipeg)
Cummins Mid-Canada Ltd.
4005 52nd
Lloydminster, SK S9V 0Y9
Telephone: (305) 825–2062
FAX: (305) 825–6702

### Regina - (Branch of Winnipeg)
Cummins Mid-Canada Ltd.
110 Kress Street
P.O. Box 98
Regina, SK S4P 2Z5
Telephone: (306) 721-9710
FAX: (306) 721–2962

### Saskatoon - (Branch of Winnipeg)
Cummins Mid-Canada, Ltd.
3001 Faithful Avenue
P.O. Box 7679
Saskatoon, SK S7K 4R4, Canada
Telephone: (306) 933-4022
FAX: (306) 242–1722

# Distributors and Branches - Australia

## Branches:

### Gepps Cross
Cummins Engine Company, Pty. Ltd.
P.O. Box 108
Blair Athol, 5084
South Australia, Australia
Location:
45-49 Cavan Road
Gepps Cross, 5094
Telephone: (61-8) 8262-5211

### Dosra
Cummins Engine Company, Pty. Ltd.
P.O. Box 124
Darra, 4076
Queensland, Australia
Location:
33 Kimberley Street
Darra, 4076, Australia
Telephone: (61-7) 3375-3277

### Bunbury
Cummins Engine Company, Pty. Ltd.
P.O. Box 1751
Bunbury, WA 6230
Australia
Location:
11 Dryanda Court
Picton, WA 6230
Telephone: (61-8) 9725-6777
FAX: (61-8) 9725-6444

### Cairns
Cummins Engine Company, Pty. Ltd.
P.O. Box 7189
Cairns Mail Centre, 4870
Queensland, Australia
Location:
Liberty Street
Cairns, 4870
Telephone: (61-7) 935-2999

### Campbellfield
Cummins Engine Company, Pty. Ltd.
Private Bag 9
Campbellfield, 3061
Victoria, Australia
Location:
1788-1800 Hume Highway
Campbellfield, 3061
Telephone: (613) 9357-9200

### Dandenong
Cummins Engine Company, Pty. Ltd.
Lot 7 Greens Road
Dandenong, 3175
Victoria, Australia
Telephone: (613) 9706-8088

### Darwin
Cummins Engine Company, Pty. Ltd.
P.O. Box 37587
Winnellie, 0821
Northern Territory, Australia
Location:
Lot 1758 Graffin Crescent
Winnellie, 0821
Telephone: (61-8) 8947-0766

### Devonport
Cummins Engine Company, Pty. Ltd.
P.O. Box 72E
Tasmania, Australia
Location:
2 Matthews Way
Devonport, 7310
Telephone: (61-3) 6424-8800

### Emerald
Cummins Engine Company, Pty. Ltd.
P.O. Box 668
Emerald, 4720
Queensland, Australia
Location:
Capricorn Highway
Emerald, 4720
Telephone: (61-7) 4982-4022

### Grafton
Cummins Engine Company, Pty. Ltd.
P.O. Box 18
South Grafton, 2461
New South Wales, Australia
Location:
18-20 Induna Street
South Grafton, 2461
Telephone: (61-2) 6642-3655

### Hexham
Cummins Engine Company, Pty. Ltd.
21 Galleghan Street
Hexham
New South Wales, Australia
Telephone: (61-2) 4964-8466
FAX: (61-2) 4964-8616

### Kalgoorlie
Cummins Engine Company, Pty. Ltd.
P.O. Box 706
Kalgoorlie, 6430
Western Australia, Australia
Location:
16 Atbara Street
Kalgoorlie, 6430
Telephone: (61-8) 9021-2588

### Karratha
Cummins Engine Company, Pty. Ltd.
P.O. Box 377
Karratha, WA 6714
Australia
Location:
1490 Lambert Road
Karratha, WA 6714
Australia
Telephone: (61-8) 9144-4646
FAX: (61-8) 9143-1507

### Laverton
Cummins Engine Company, Pty. Ltd.
Locked Bag 1
Laverton, Victoria 3028
Australia
Location:
195 Boundary Road
Laverton North, Victoria 3028
Australia
Telephone: (61-3) 9360-0800
FAX: (61-3) 9360-0438

### Leeton
Cummins Engine Company, Pty. Ltd.
P.O. Box 775
Leeton, NSW 2705
Australia
Location:
29 Brady Way
Leeton, NSW 2705
Australia
Telephone: (61-2) 6953-3077
FAX: (61–2) 6953-3109

### Mackay
Cummins Engine Company, Pty. Ltd.
P.O. Box 842
Mackay, 4740
Queensland, Australia
Location:
4 Presto Avenue
Mackay, 4746
Telephone: (61-7) 4955-1222

### Mount Gambier
Cummins Engine Company, Pty. Ltd.
P.O. Box 2219
Mount Gambier, 5290
South Australia, Australia
Location:
2 Avey Road
Mount Gambier, 5290
Telephone: (61-87) 25-6422

### Penrith
Cummins Engine Company, Pty. Ltd.
P.O. Box 132
Cambridge Park, 2747
New South Wales, Australia
Location:
7 Andrews Road
Penrith, 2750
Telephone: (61-2) 4729-1313

### Queanbeyan
Cummins Engine Company, Pty. Ltd.
P.O. Box 527
Queanbeyan, 2620
New South Wales, Australia
Location:
15-27 Bayldon Road
Queanbeyan, 2620
Telephone: (61-2) 6297-3433
FAX: (61-2) 6297-6709

### Regency Park
Cummins Engine Company, Pty. Ltd.
P.O. Box 2147
Regency Park, SA 5942
Australia
Location:
11 Manton Street
Hindmarsh, SA 5942
Australia
Telephone: (61-8) 8346-3832
FAX: (61-8) 8340-2045

### Swan Hill
Cummins Engine Company, Pty. Ltd.
P.O. Box 1264
Swan Hill, 3585
Victoria, Australia
Location:
5 McAllister Road
Swan Hill, 3585
Telephone: (61-3) 5032-1511

### Tamworth
Cummins Engine Company, Pty. Ltd.
P.O. Box 677
Tamworth, 2320
New South Wales, Australia
Location:
Lot 65 Gunnedah Road
Tamworth, 2340
Telephone: (61-2) 6765-5455

### Townsville
Cummins Engine Company, Pty. Ltd.
P.O. Box 7339
Garbutt Business Centre, QLD4814
Australia
Location:
704-710 Ingham Road
Townsville, QLD 4814
Telephone: (61-7) 4774-7733
FAX: (61-7) 4774-7640

### Welshpool
Cummins Engine Company, Pty. Ltd.
P. O. Box 52
Welshpool, 6986
Western Australia, Australia
Location:
50 Kewdale Road
Welshpool, 6106
Telephone: (61-8) 9458-5911

### Wetherill Park
Cummins Engine Company, Pty. Ltd.
Private Bag 150
Wetherill Park, NSW 2164
Australia
Location:
492-494 Victoria Street
Wetherill Park, NSW 2164
Australia
Telephone: (61-2) 9616-5300
FAX: (61-2) 9616-5399

### Wodonga
Cummins Engine Company, Pty. Ltd.
P.O. Box 174
Wodonga, 3690
Victoria, Australia
Location:
9-11 McKoy Street
Wodonga, 3690
Telephone: (61-2) 6024-3655

# Distributors and Branches - New Zealand

## Auckland

Cummins Diesel Sales & Service (NZ) Ltd.
Private Bag 92804
Penrose, Auckland, New Zealand
Location:
440 Church Street
Penrose
Telephone: (64-9) 579-0085

## Branches:

### Auckland

Cummins Diesel Engines
Private Bag 92804
Penrose, Auckland, New Zealand
Location:
440 Church Street
Penrose
Telephone: (64-9) 579-0085

### Christchurch

Cummins Diesel Engines
P.O. Box 16-149
Hornby, Christchurch, New Zealand
Location:
35 Parkhouse Road
Sockburn, Christchurch
Telephone: (64-3) 348-8170

### Mt. Maunganui

Cummins Diesel Engines
P.O. Box 4005
Mt. Maunganui, New Zealand
Location:
101 Totara Street
Mt. Maunganui
Telephone: (64-7) 575-0545

### Palmerston North

Cummins Diesel Engines
P.O. Box 9024
Palmerston North, New Zealand
Location:
852-860 Tremaine Avenue
Telephone: (64-6) 356-2209

# NOTES

# Section TS - Troubleshooting Symptoms

## Section Contents

| | Page |
|---|---|
| **Troubleshooting Procedures and Techniques** | TS-1 |
| General Information | TS-1 |
| **Troubleshooting Symptoms Charts** | TS-2 |
| Alternator Not Charging or Insufficient Charging | TS-3 |
| Coolant Contamination | TS-4 |
| Coolant Loss | TS-5 |
| Coolant Temperature Above Normal | TS-7 |
| Coolant Temperature is Below Normal | TS-6 |
| Engine Difficult to Start or Will Not Start (Exhaust Smoke) | TS-10 |
| Engine Difficult to Start or Will Not Start (No Exhaust Smoke) | TS-12 |
| Engine Noise Excessive | TS-14 |
| Engine Power Output Low | TS-15 |
| Engine Runs Rough at Idle, Warm Engine | TS-19 |
| Engine Runs Rough or Misfires | TS-21 |
| Engine Speed Surges at Low or High Idle | TS-23 |
| Engine Starts But Will Not Keep Running | TS-24 |
| Engine Vibration Excessive | TS-25 |
| Engine Will Not Crank or Cranks Slowly | TS-26 |
| Engine Will Not Reach Rated Speed (RPM) | TS-27 |
| Engine Will Not Shut Off | TS-29 |
| Exhaust Smoke Excessive Under Load | TS-30 |
| Fuel Knock | TS-32 |
| Fuel or Lubricating Oil Leaking From Exhaust Manifold | TS-33 |
| General Information | TS-2 |
| Lubricating Oil Contaminated | TS-34 |
| Lubricating Oil Loss | TS-35 |

Page

Lubricating Oil Pressure High ..... TS-37
Lubricating Oil Pressure Low ..... TS-38
Smoke, White — Excessive ..... TS-40

# Troubleshooting Procedures and Techniques

## General Information

This guide describes some typical engine operating problems, their causes, and some acceptable corrections to those problems. Unless noted otherwise, the problems listed are those which an operator can diagnose and repair.

**⚠ WARNING ⚠**

**Performing troubleshooting procedures NOT outlined in this section can result in equipment damage or personal injury or death. Troubleshooting must be performed by trained, experienced technicians. Consult a Cummins Authorized Repair Location for diagnosis and repair beyond that which is outlined, and for symptoms not listed in this section. Before beginning any troubleshooting, refer to General Safety Instructions in Section i of this manual.**

Follow the suggestions below for troubleshooting:

- Study the complaint thoroughly before acting
- Refer to the engine system diagrams
- Do the easiest and most logical things first
- Find and correct the cause of the complaint

# Troubleshooting Symptoms Charts

## General Information

Use the charts on the following pages of this section to aid in diagnosing specific engine symptoms. Read each row of blocks from top to bottom. Follow through the chart to identify the corrective action.

**⚠ WARNING ⚠**

**Troubleshooting presents the risk of equipment damage, personal injury or death. Troubleshooting must be performed by trained experienced technicians.**

# Alternator Not Charging or Insufficient Charging

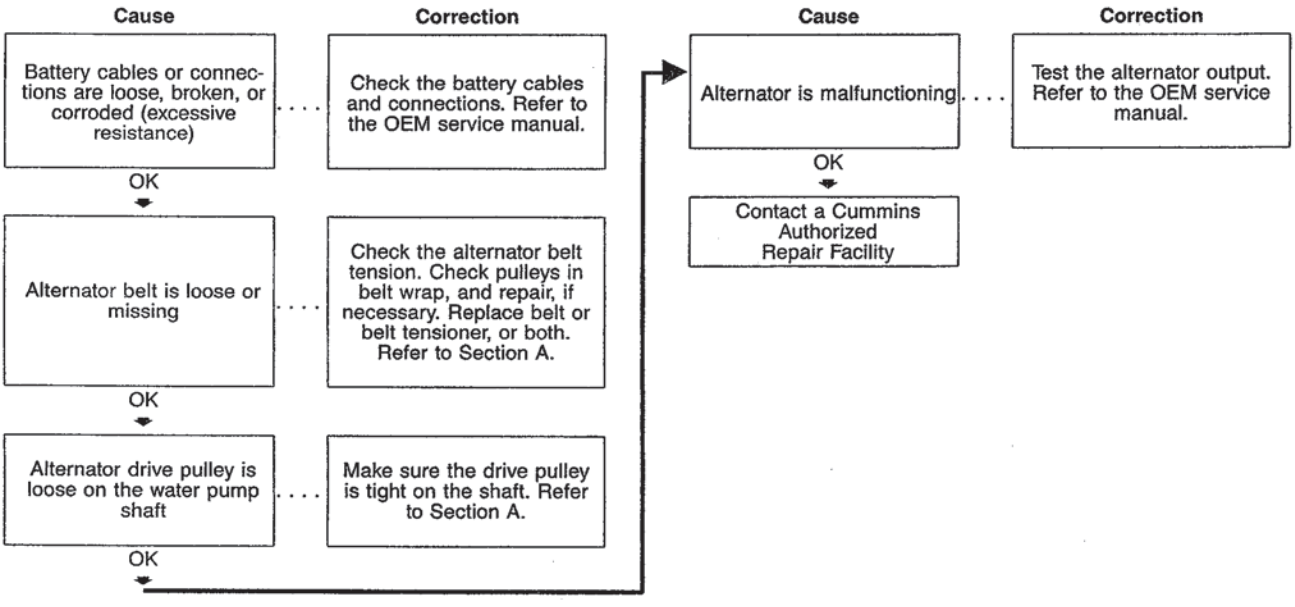

## Coolant Contamination

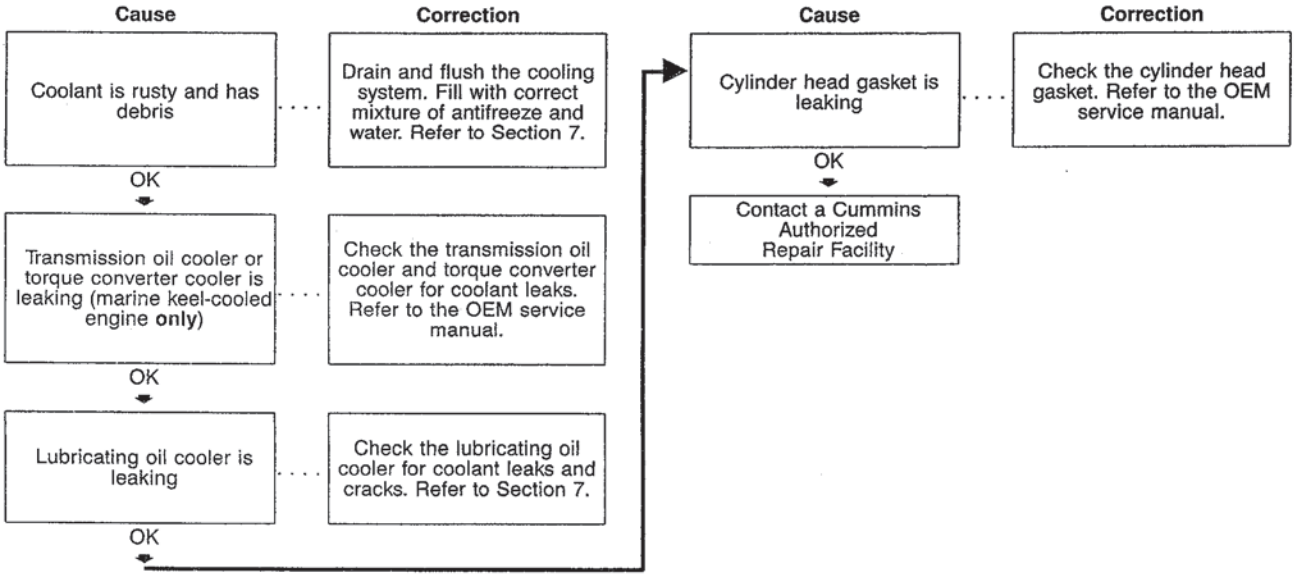

# Coolant Loss

| Cause | Correction |
|---|---|
| Coolant is rusty and has debris | Drain and flush the cooling system. Fill with correct mixture of antifreeze and water. Refer to Section 7. |
| OK | |
| External engine leak | Inspect the engine and its components for seal, gasket, tappet cover, oil cooler, or drain cock leaks. |
| OK | |
| Combustion gases are entering the cooling system | Check for combustion gases in the cooling system. Refer to the OEM service manual. |
| OK | |
| Transmission oil cooler or torque converter cooler is leaking (marine keel-cooled engine **only**) | Check the transmission oil cooler and torque converter cooler for coolant leaks. Refer to the OEM service manual. |
| OK | |
| Air compressor cylinder head is cracked or porous, or has a leaking gasket (nonmarine engines **only** ) | Inspect the air compressor cylinder head and gasket. Refer to the OEM service manual. |
| OK | |
| Lubricating oil cooler is leaking oil | Check the lubricating oil cooler for oil leaks. Refer to Section A. |
| OK | |
| Contact a Cummins Authorized Repair Facility | |

# Coolant Temperature is Below Normal

| Cause | Correction |
|---|---|
| Radiator shutters are stuck open or opening early | Check the shutter operation. Repair or replace the shutters if necessary. Refer to the OEM service manual. |
| OK | |
| Fan drive or fan controls are malfunctioning | Check the fan drive and controls. Refer to the OEM service manual. |
| OK | |
| Temperature switch failed | With the key system on, short out the harness at the temperature switch. If it engages, troubleshoot the sensor or check for air in the coolant system. Remove the sensor and make sure at ambient conditions the sensor is open; and at the correct temperature, 91°C [196°F], make sure the sensor closes. Replace if necessary. |
| OK | |
| Temperature gauge malfunction | Check or replace the temperature gauge. Refer to the OEM service manual. |
| OK | |
| Thermostat is **not** correct or is malfunctioning | Check the thermostat for the correct part number and for correct operation. Refer to the OEM service manual. |
| OK | |
| Contact a Cummins Authorized Repair Facility | |

# Coolant Temperature Above Normal

| Cause | Correction |
|---|---|
| Coolant level is below specification | Inspect the engine and cooling system for external coolant leaks. Repair if necessary. Add coolant. Refer to Section 7. |
| OK | |
| Radiator fins are damaged or obstructed with debris | Inspect the radiator fins. Clean and repair the fins as necessary. Refer to the OEM service manual. |
| OK | |
| Cooling system hose is collapsed, restricted, or leaking | Inspect the radiator hoses. Refer to Section 7. |
| OK | |
| Lubricating oil level is below specification | Check the oil level. Verify the dipstick calibration and the oil pan capacity. Fill the system to the specified level. Refer to Section 3. |
| OK | |
| Fan shroud is damaged or missing, or the air recirculation baffles are damaged or missing | Inspect the shroud and the recirculation baffles. Repair, replace, or install if necessary. Refer to the OEM service manual. |
| OK | |
| Fan drive belt is loose, tight, or **not** in alignment | Check the fan drive belt. Refer to Section A. |
| OK | |
| Fan drive or fan controls are malfunctioning | Check the fan drive and controls. Refer to the OEM service manual. |
| OK | |
| Radiator cap is **not** correct, is malfunctioning, or has low-pressure rating | Check the radiator pressure cap. Refer to the OEM service manual. |
| OK | |

(Continued)

## Coolant Temperature Above Normal (Continued)

| Cause | Correction |
| --- | --- |
| Radiator shutters are **not** opening completely or the shutterstat setting is wrong | Inspect the radiator shutters. Repair or replace if necessary. Refer to the manufacturer's instructions. Check the shutterstat setting. Refer to the OEM service manual. |
| OK | |
| Temperature gauge malfunction | Check or replace the temperature gauge. Refer to the OEM service manual. |
| OK | |
| Thermostat is **not** correct or is malfunctioning | Check the thermostat for the correct part number and for correct operation. Refer to the OEM service manual. |
| OK | |
| Fuel pump is malfunctioning | Test the fuel pump on a fuel pump test stand. Replace the fuel pump if necessary. |
| OK | |
| Vehicle speed is too low for adequate cooling with high engine load | Reduce the engine load. Increase the engine (fan) rpm by downshifting. |
| OK | |
| Water pump is malfunctioning | Check the water pump for correct operation. Replace the water pump if necessary. |
| OK | |
| Air in the cooling system | Inspect and bleed the cooling system. |
| OK | |

(Continued)

## Coolant Temperature Above Normal (Continued)

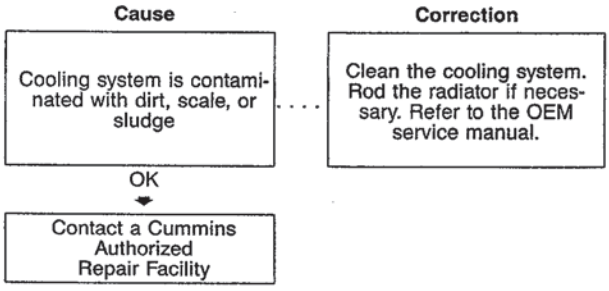

# Engine Difficult to Start or Will Not Start (Exhaust Smoke)

| Cause | Correction |
|---|---|
| Starting procedure is **not** correct | Verify the correct starting procedure. Refer to Section 1. |
| OK | |
| Engine cranking speed is too slow | Check the engine cranking speed with a handheld tachometer or electronic service tool. If the cranking speed is slower than 150 rpm, refer to the OEM service manual. |
| OK | |
| Starting aid is necessary for cold weather, or starting aid is malfunctioning | Check for correct operation of cold starting aid. Refer to Section 1. |
| OK | |
| Air in the fuel system | Bleed the fuel system and check for leaks. Refer to Seciton V. |
| OK | |

| Cause | Correction |
|---|---|
| Fuel supply is **not** adequate | Check the flow through the filter to locate the source of the restriction. Refer to the OEM service manual. |
| OK | |
| Fuel drain backup | Verify the fuel return line is plumbed to the bottom of the fuel tank. |
| OK | |
| Fuel pump overflow valve is malfunctioning | Check the overflow valve. Replace if necessary. Refer to the OEM service manual. |
| OK | |
| Fuel transfer pump malfunctioning | Inspect the fuel transfer pump. Replace if necessary. Refer to the OEM service manual. |
| OK | |

(Continued)

# Engine Difficult to Start or Will Not Start (Exhaust Smoke) (Continued)

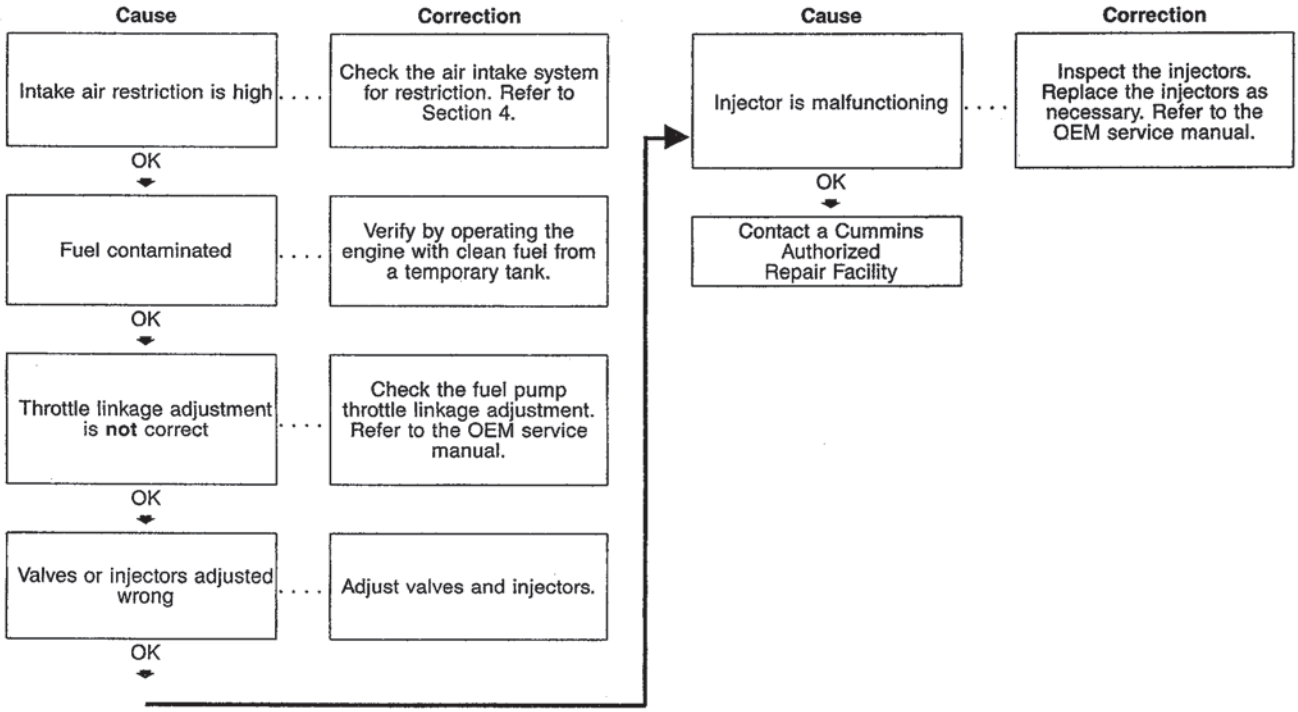

# Engine Difficult to Start or Will Not Start (No Exhaust Smoke)

| Cause | Correction |
|---|---|
| Starting procedure is **not** correct | Verify the correct starting procedure. Refer to Section 1. |
| OK | |
| Fuel level is low in the tank | Fill the supply tank. Refer to the OEM service manual. |
| OK | |
| Electrical or manual fuel shutdown binds | Check for loose wires and verify that the solenoid is functioning. Check to be sure manual shutoff lever is **not** binding at the injection pump. Refer to the OEM service manual. |
| OK | |
| Air in the fuel system | Bleed the fuel system and check for leaks. Refer to Section V. |
| OK | |
| Fuel transfer pump malfunctioning | Inspect the fuel transfer pump. Replace if necessary. Refer to Section V. |
| OK | |
| Fuel drain backup | Verify the fuel return line is plumbed to the bottom of the fuel tank. |
| OK | |
| Fuel pump overflow valve is malfunctioning | Check the overflow valve. Replace if necessary. Refer to the OEM service manual. |
| OK | |
| Throttle linkage misadjusted or damaged | Adjust or repair the linkage. Refer to the OEM service manual. |
| OK | |

(Continued)

## Engine Difficult to Start or Will Not Start (No Exhaust Smoke) (Continued)

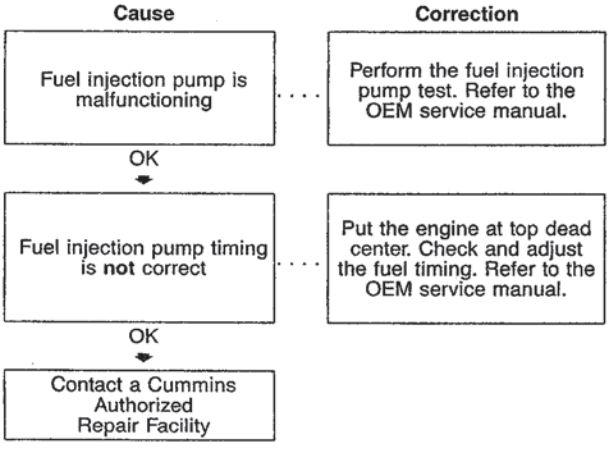

## Engine Noise Excessive

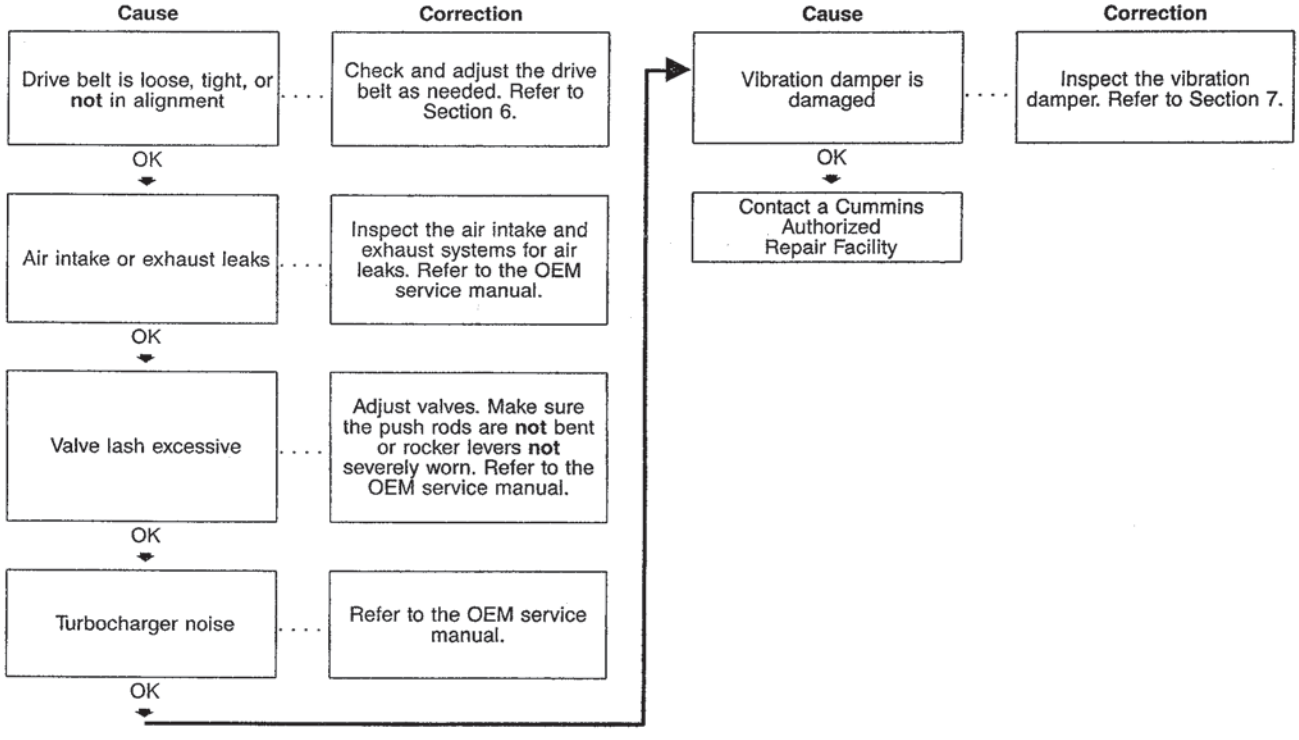

# Engine Power Output Low

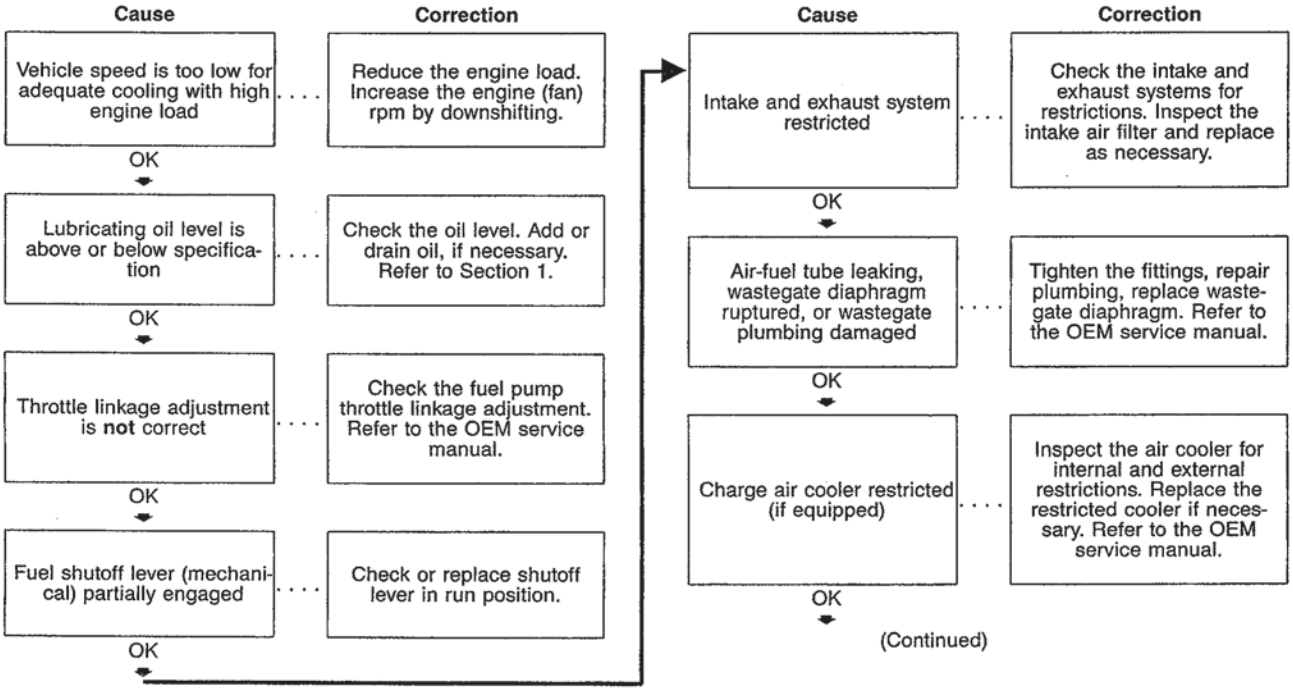


(Continued)

# Engine Power Output Low (Continued)

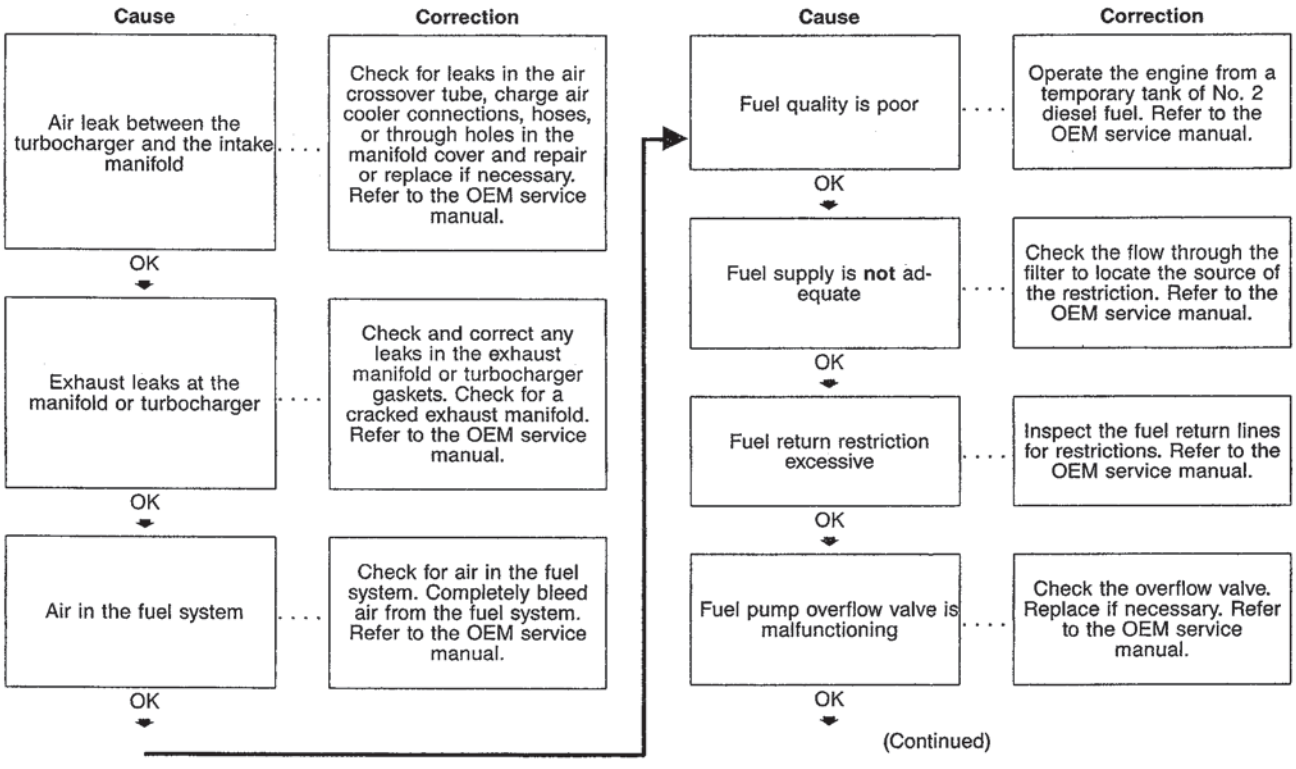


(Continued)

# Engine Power Output Low (Continued)

| Cause | Correction |
|---|---|
| Fuel lift pump is malfunctioning | Check the fuel lift pump for correct operation. Check the pump output pressure. Replace the fuel lift pump if necessary. Refer to the OEM service manual. |
| OK | |
| Intake manifold air temperature is above specification | Check intake air temperature. Refer to Section A. |
| OK | |
| Fuel temperature is above specification | Fill the fuel tanks. Turn off or bypass the fuel heaters, and check the fuel cooler. Refer to the OEM service manual. |
| OK | |

| Cause | Correction |
|---|---|
| Fuel injection pump timing is **not** correct | Put the engine at top dead center. Check and adjust the fuel timing. Refer to the OEM service manual. |
| OK | |
| Exhaust system restriction is above specification | Perform the Oxidation Catalyst Pressure Test. Refer to the OEM service manual. |
| OK | |
| Turbocharger wastegate is malfunctioning (if equipped) | Check the wastegate for correct operation. Refer to the OEM service manual. |
| OK | |
| Turbocharger is worn or malfunctioning | Check for the specified boost pressure. Inspect the turbocharger. Replace if necessary. Refer to Section A. |
| OK | |

(Continued)

## Engine Power Output Low (Continued)

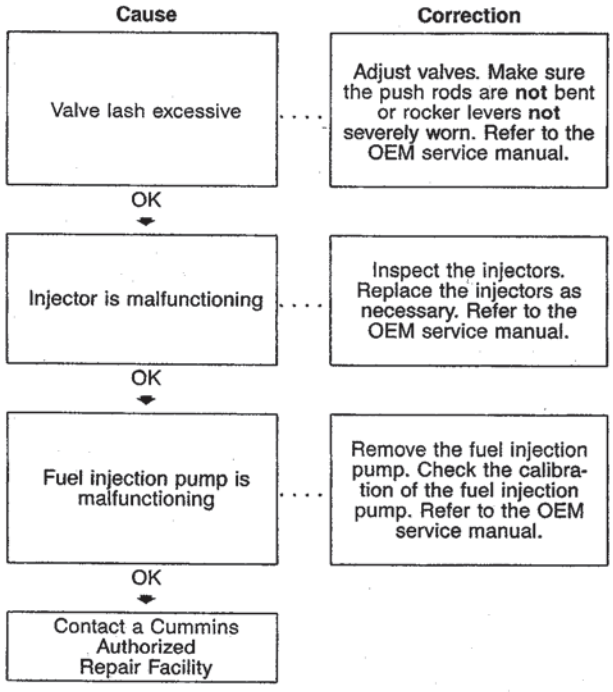

# Engine Runs Rough at Idle, Warm Engine

| Cause | Correction |
|---|---|
| Idle speed is set too low for accessories | Check and adjust the low-idle screw. Refer to the OEM service manual. |
| OK | |
| Air in the fuel system | Bleed the fuel system and check for leaks. Refer to the OEM service manual. |
| OK | |
| Fuel pump overflow valve is malfunctioning | Check the overflow valve. Replace if necessary. Refer to the OEM service manual. |
| OK | |
| Fuel transfer pump malfunctioning | Inspect the fuel transfer pump. Replace if necessary. Refer to the OEM service manual. |
| OK | |
| Fuel injection pump timing is incorrect | Check and adjust the injection pump timing. Refer to the OEM service manual. |
| OK | |
| Injector is malfunctioning | Inspect the injectors. Replace the injectors as necessary. Refer to the OEM service manual. |
| OK | |
| Engine mounts are worn, damaged, or **not** correct | Inspect the engine mounts. Refer to the OEM service manual. |
| OK | |

(Continued)

## Engine Runs Rough at Idle, Warm Engine (Continued)

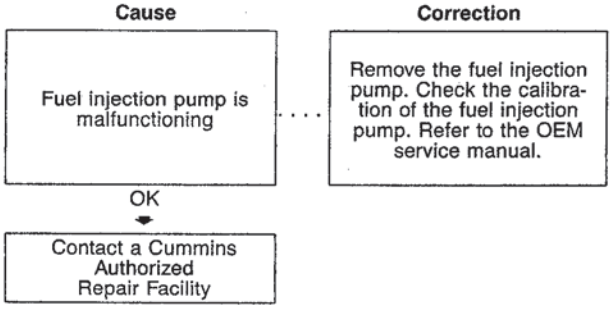

# Engine Runs Rough or Misfires

| Cause | Correction |
|---|---|
| Fuel contaminated | Verify by operating the engine with clean fuel from a temporary tank. |
| OK | |
| Air in the fuel system | Bleed the fuel system and check for leaks. Refer to the OEM service manual. |
| OK | |
| Fuel leak | Check the fuel lines, fuel connections, and fuel filters for leaks. Refer to the OEM service manual. |
| OK | |
| Fuel pump overflow valve is malfunctioning | Check the overflow valve. Replace if necessary. Refer to the OEM service manual. |
| OK | |
| Fuel lift pump is malfunctioning | Check the fuel lift pump for correct operation. Check the pump output pressure. Replace the fuel lift pump if necessary. Refer to the OEM service manual. |
| OK | |
| Valve lash excessive | Adjust valves. Make sure the push rods are **not** bent or rocker levers **not** severely worn. Refer to the OEM service manual. |
| OK | |
| Injector is malfunctioning | Inspect the injectors. Replace the injectors as necessary. Refer to the OEM service manual. |
| OK | |

(Continued)

## Engine Runs Rough or Misfires (Continued)

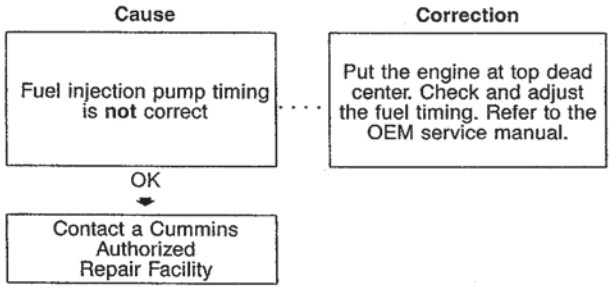

# Engine Speed Surges at Low or High Idle

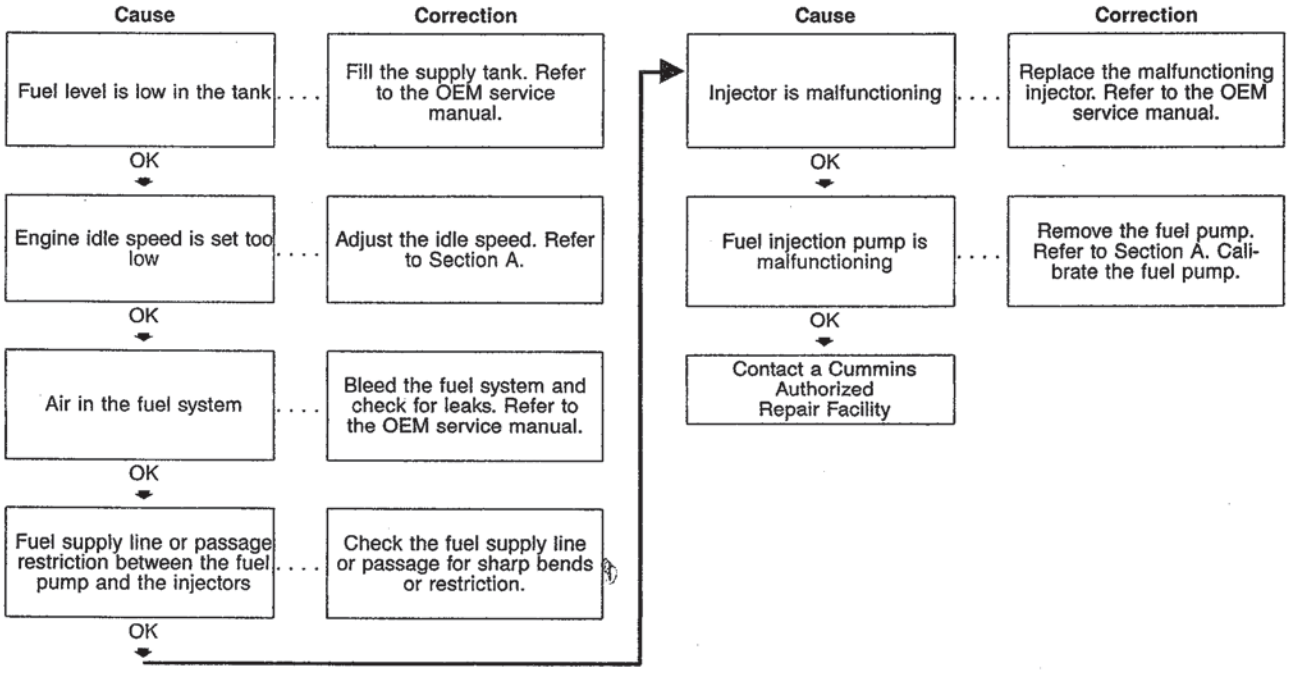

# Engine Starts But Will Not Keep Running

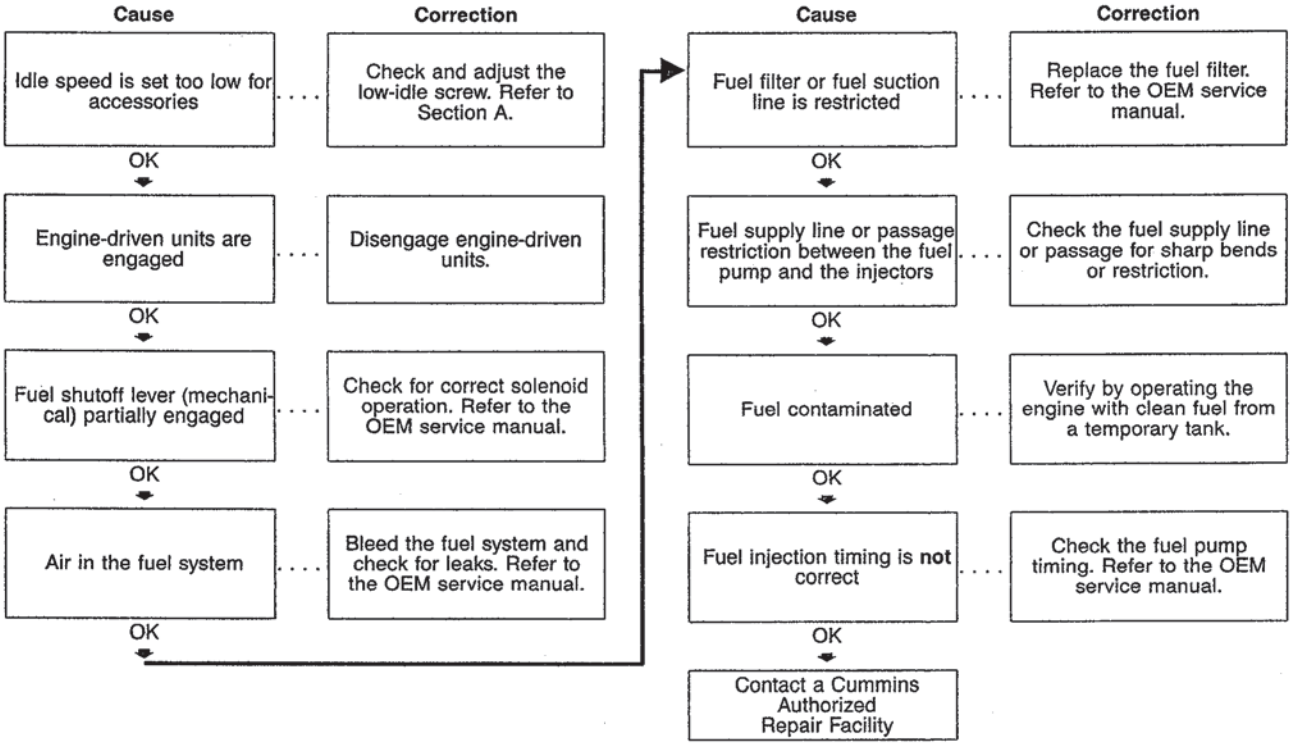

# Engine Vibration Excessive

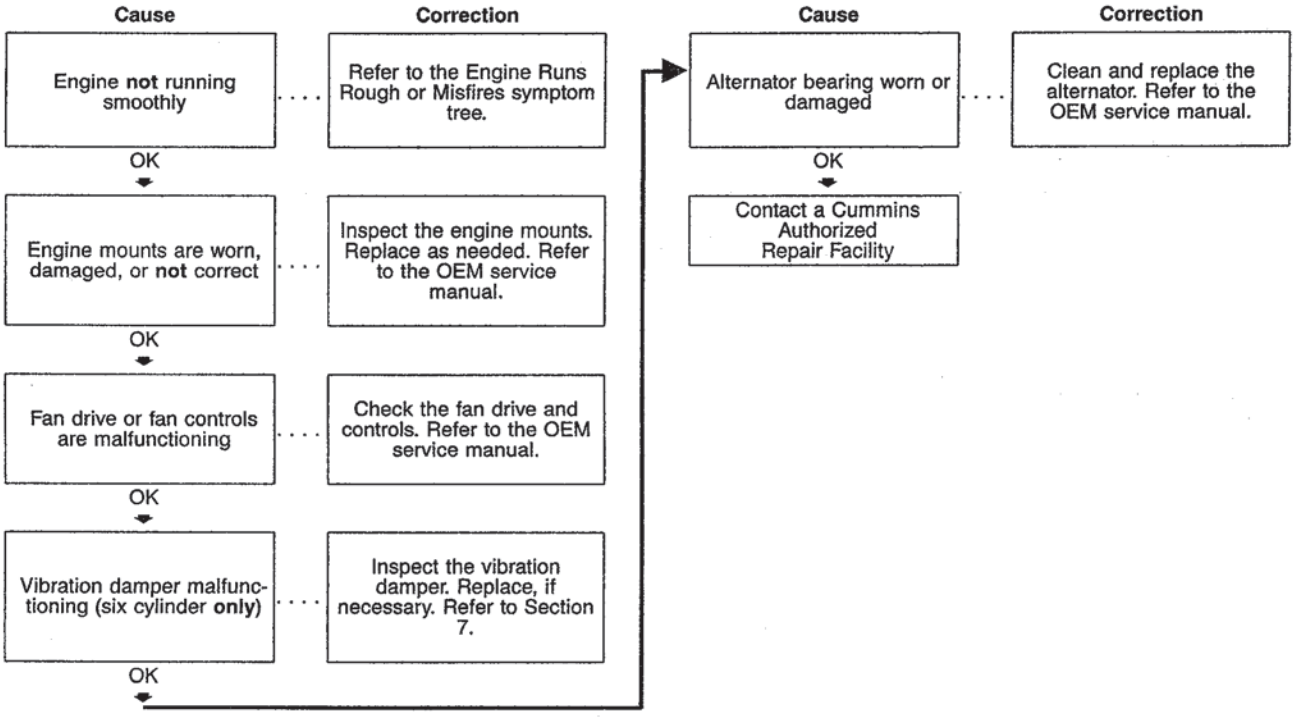

# Engine Will Not Crank or Cranks Slowly

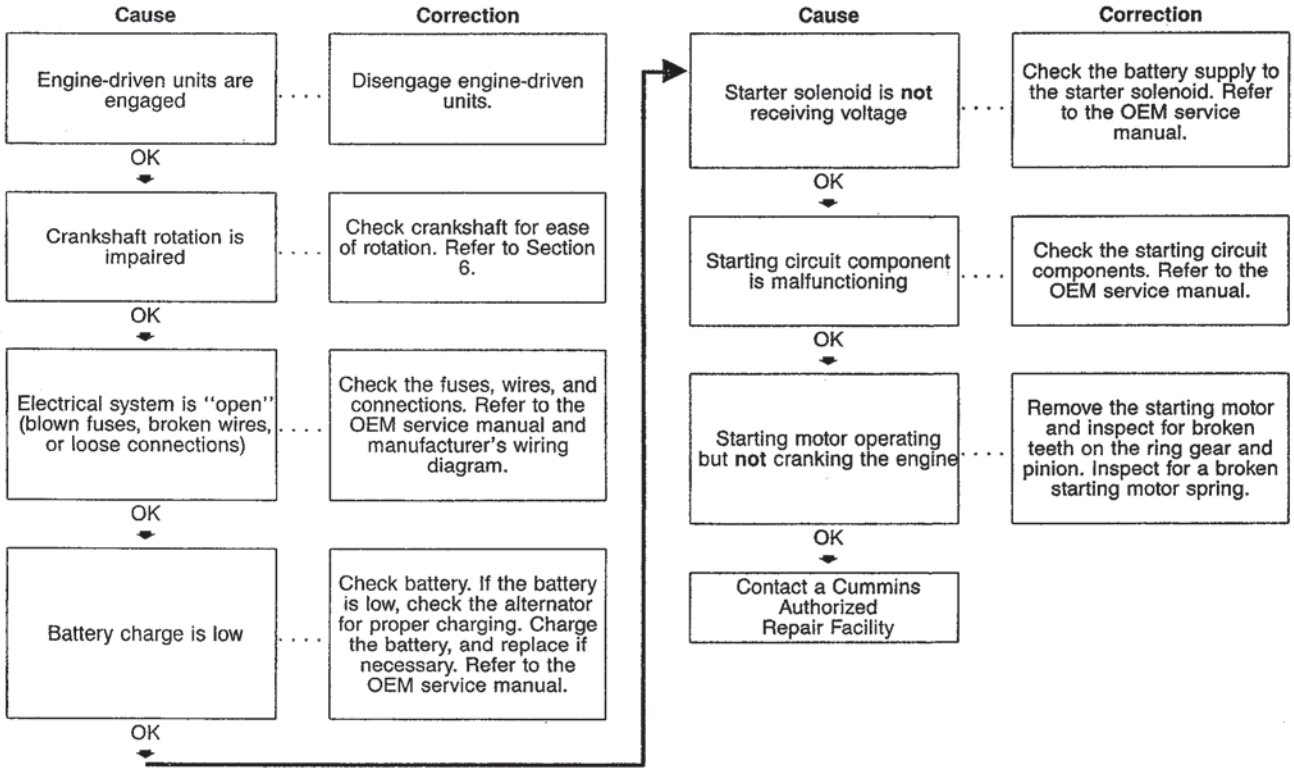

# Engine Will Not Reach Rated Speed (RPM)

| Cause | Correction |
|---|---|
| Vehicle speed is too low for adequate cooling with high engine load | Reduce the engine load. Increase the engine (fan) rpm by downshifting. |
| OK | |
| Throttle linkage adjustment is **not** correct | Check throttle linkage adjustment. Refer to the OEM service manual. |
| OK | |
| Tachometer is **not** calibrated or is malfunctioning | Compare the tachometer reading with a handheld tachometer or an electronic service tool reading. Calibrate or replace the tachometer as necessary. Refer to the OEM service manual. |
| OK | |

| Cause | Correction |
|---|---|
| Air-fuel tube leaking, wastegate diaphragm ruptured, or wastegate plumbing damaged | Tighten the fittings, repair plumbing, replace wastegate diaphragm. Refer to the OEM service manual. |
| OK | |
| Charge air cooler restricted (if equipped) | Inspect the air cooler for internal and external restrictions. Replace the restricted cooler if necessary. Refer to the OEM service manual. |
| OK | |
| Fuel supply is **not** adequate | Check the flow through the filter to locate the source of the restriction. Refer to the OEM service manual. |
| OK | |

(Continued)

# Engine Will Not Reach Rated Speed (RPM) (Continued)

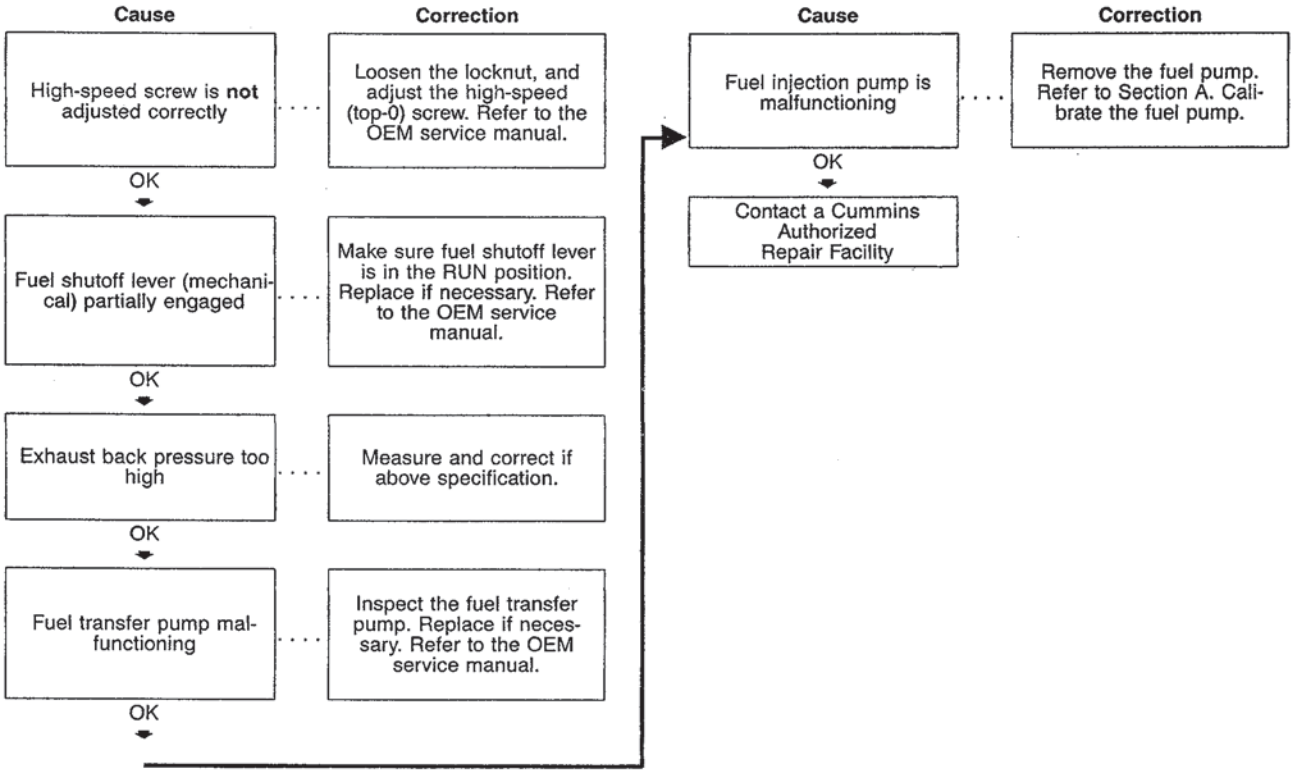

## Engine Will Not Shut Off

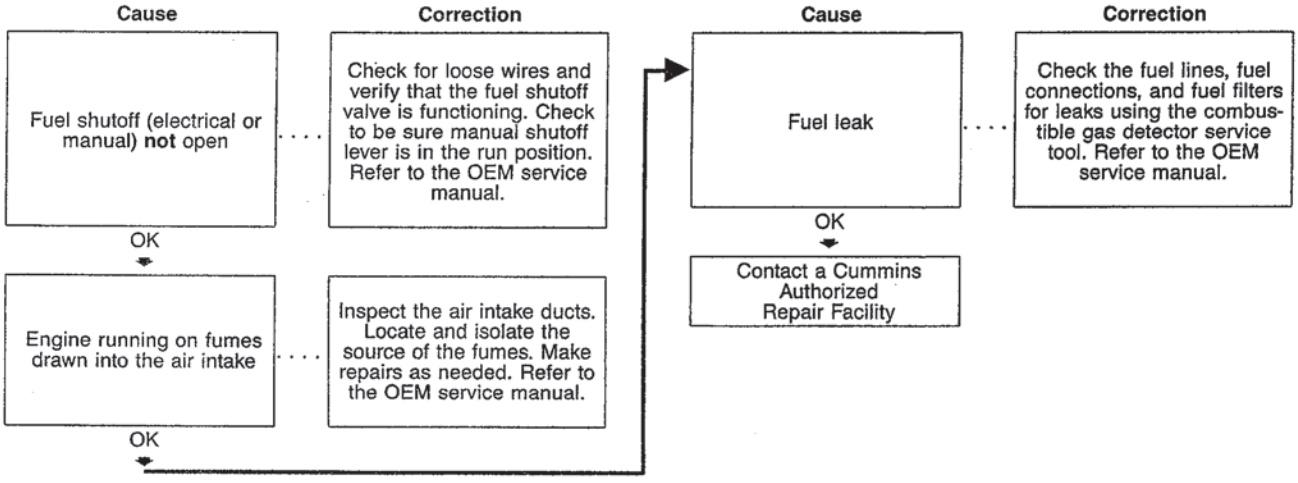

## Exhaust Smoke Excessive Under Load

| Cause | Correction |
|---|---|
| Engine is being lugged down | Use lower gear. |
| OK | |
| Air in the fuel system | Check for air in the fuel system. Completely bleed air from the fuel system. Refer to the OEM service manual. |
| OK | |
| Air filter is restricted | Check the air filter for restrictions. Refer to Refer to Section 4. |
| OK | |
| Fuel injection pump timing is **not** correct | Put the engine at top dead center. Check and adjust the fuel timing. Refer to the OEM service manual. |
| OK | |
| Intake or exhaust leak | Check intake and exhaust systems for loose or damaged piping connections and/or missing pipe plugs. Check turbocharger and exhaust manifold mounting. Refer to the OEM service manual. |
| OK | |
| Injector sealing washer **not** correct | Check to see if an extra sealing washer is installed under injector. Remove any additional sealing washer. **Only** one is required. Refer to the OEM service manual. |
| OK | |
| Injector is malfunctioning | Inspect the injectors. Replace the injectors as necessary. Refer to the OEM service manual. |
| OK | |

(Continued)

# Exhaust Smoke Excessive Under Load (Continued)

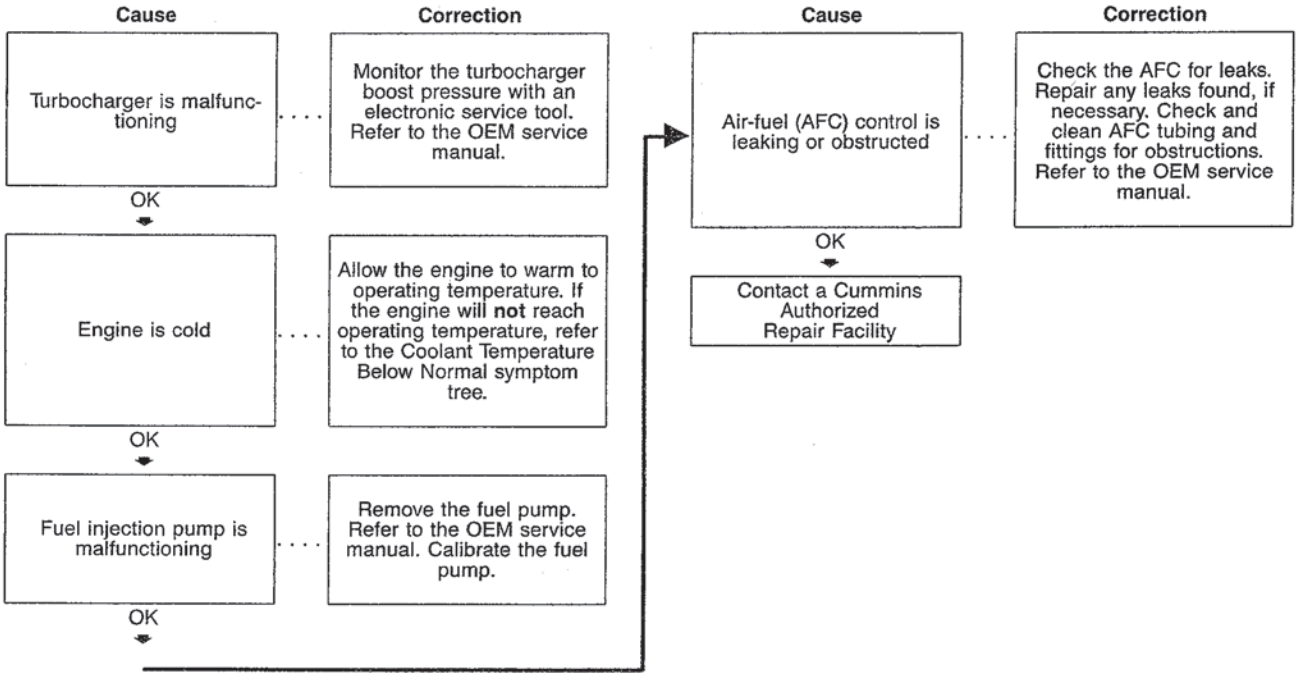

## Fuel Knock

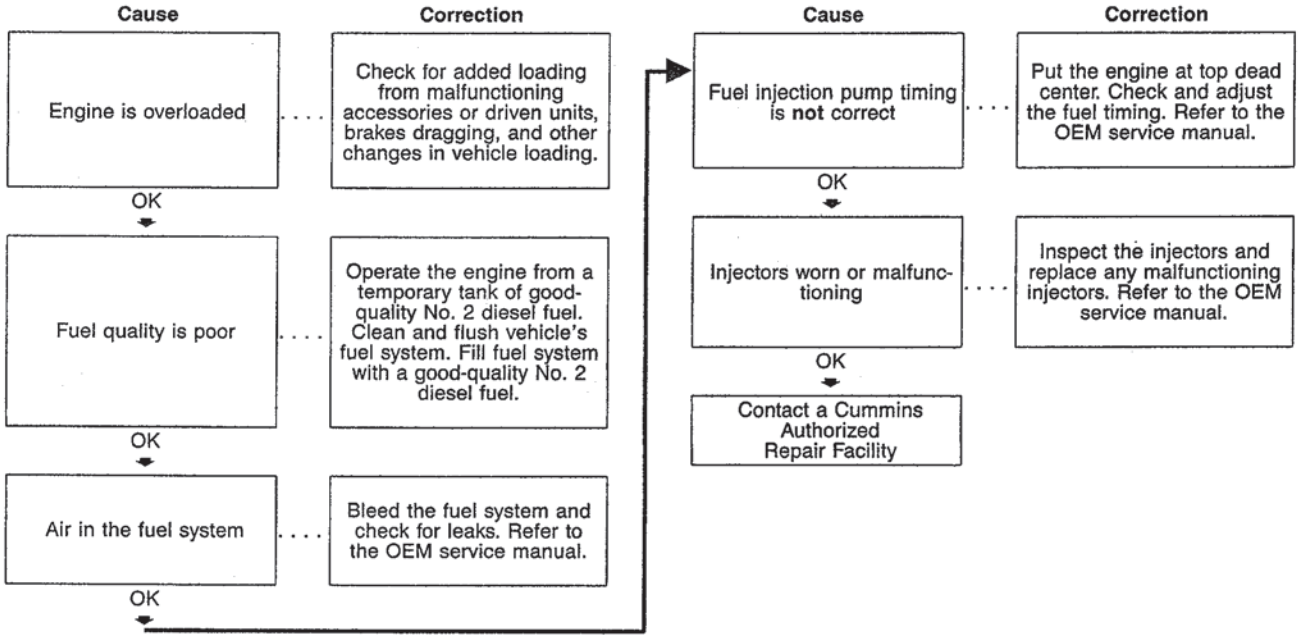
Cause
Correction
Engine is overloaded
Check for added loading from malfunctioning accessories or driven units, brakes dragging, and other changes in vehicle loading.
OK
Fuel quality is poor
Operate the engine from a temporary tank of good-quality No. 2 diesel fuel. Clean and flush vehicle's fuel system. Fill fuel system with a good-quality No. 2 diesel fuel.
OK
Air in the fuel system
Bleed the fuel system and check for leaks. Refer to the OEM service manual.
OK
Cause
Correction
Fuel injection pump timing is not correct
Put the engine at top dead center. Check and adjust the fuel timing. Refer to the OEM service manual.
OK
Injectors worn or malfunctioning
Inspect the injectors and replace any malfunctioning injectors. Refer to the OEM service manual.
OK
Contact a Cummins Authorized Repair Facility

# Fuel or Lubricating Oil Leaking From Exhaust Manifold

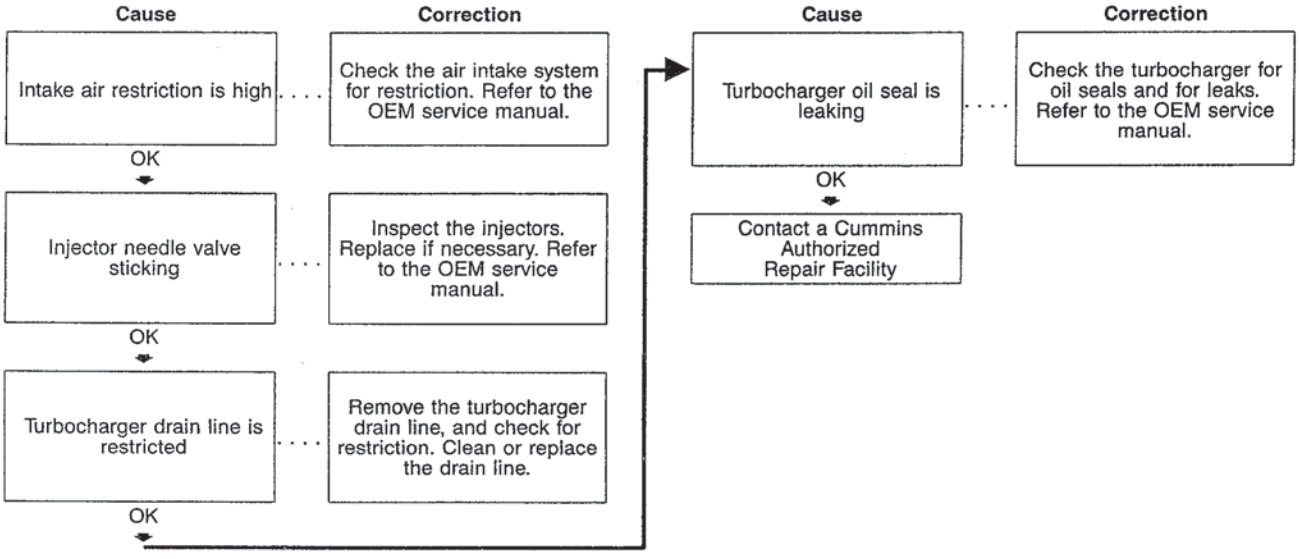

## Lubricating Oil Contaminated

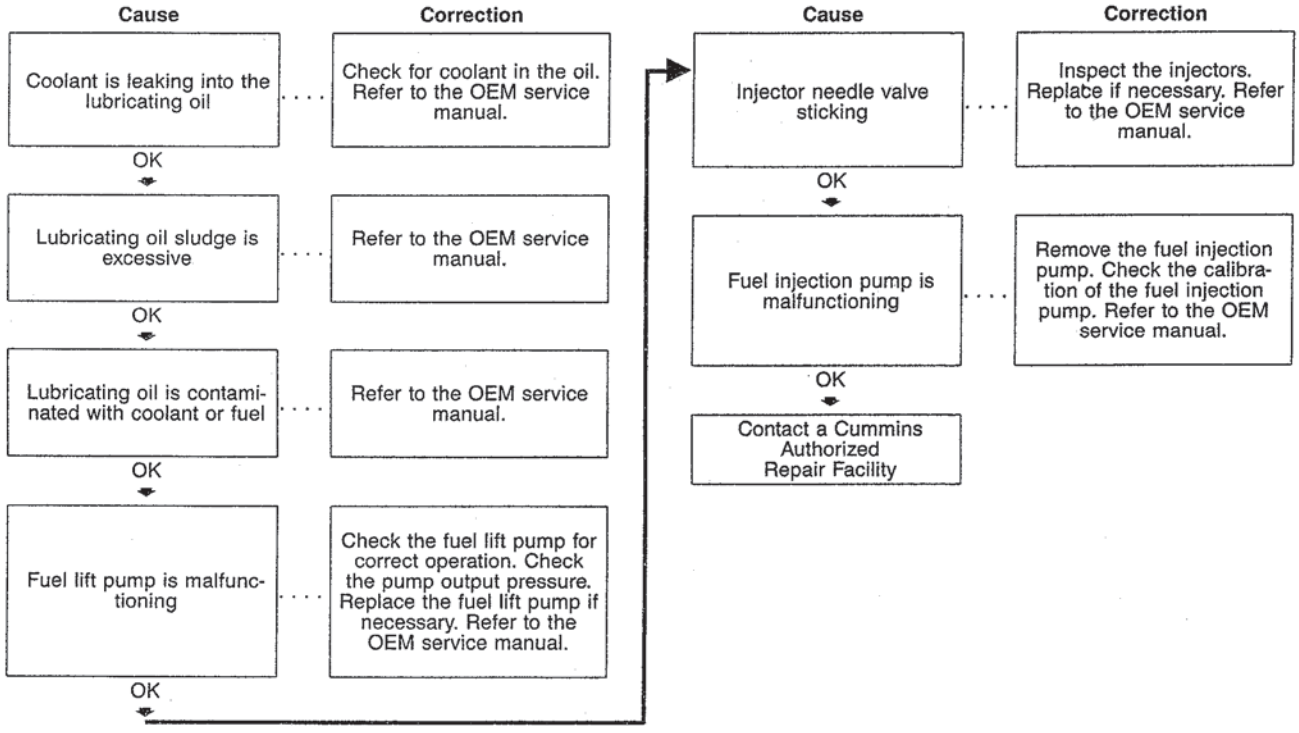

# Lubricating Oil Loss

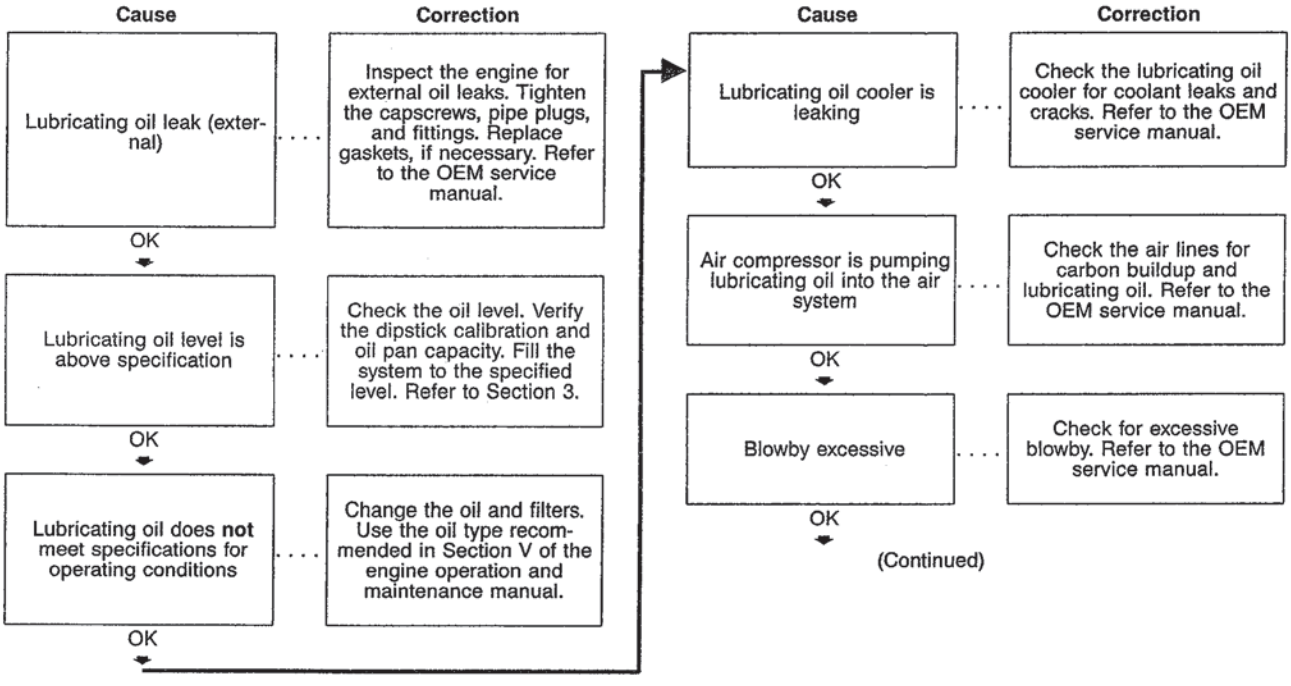


(Continued)

## Lubricating Oil Loss (Continued)

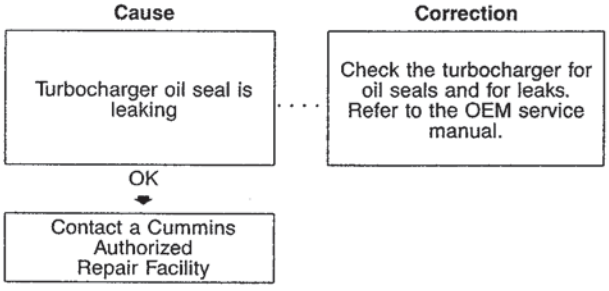

# Lubricating Oil Pressure High

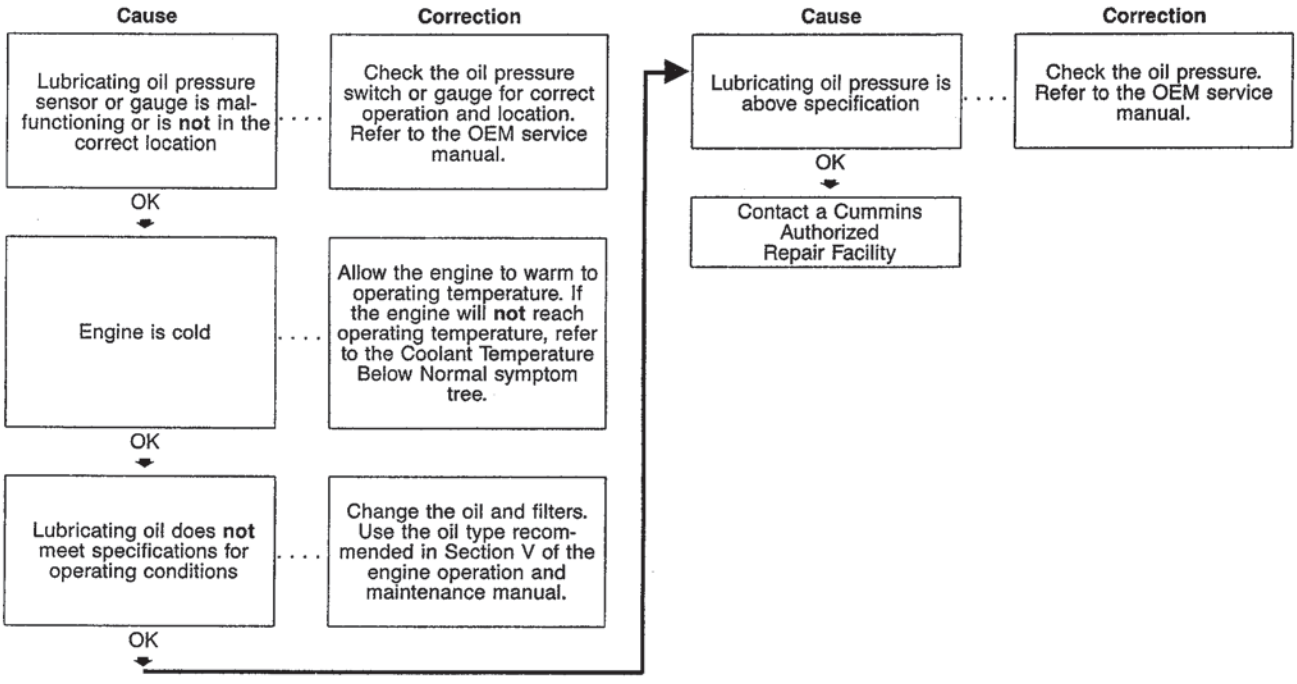

## Lubricating Oil Pressure Low

| Cause | Correction |
|---|---|
| Lubricating oil level is low | Check and replenish lubricating oil. Refer to Section 1. |
| OK | |
| Lubricating oil pressure sensor or gauge is malfunctioning or is **not** in the correct location | Check the oil pressure switch or gauge for correct operation and location. Refer to the OEM service manual. |
| OK | |
| Lubricating oil is diluted with fuel | Change the oil. Refer to Section 4. If the oil becomes diluted again, contact an Authorized Cummins Repair Facility. |
| OK | |
| Lubricating oil is diluted with water | Check for a missing dipstick, rain caps, or oil fill caps. Change the oil. Refer to the OEM service manual. |
| OK | |
| Lubricating oil does **not** meet specifications for operating conditions | Change the oil and filters. Use the oil type recommended in Section V of the engine operation and maintenance manual the OEM service manual. |
| OK | |
| Lubricating oil leak (external) | Inspect the engine for external oil leaks. Tighten the capscrews, pipe plugs, and fittings. Replace gaskets, if necessary. Refer to the OEM service manual. |
| OK | |

(Continued)

## Lubricating Oil Pressure Low (Continued)

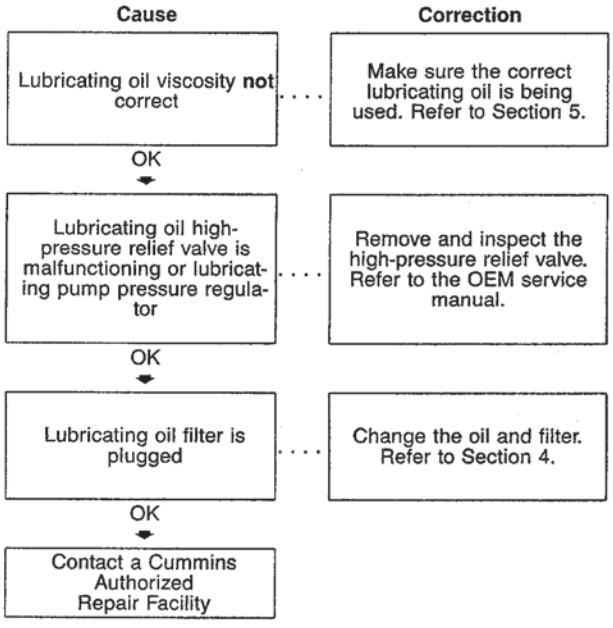

## Smoke, White — Excessive

| Cause | Correction |
|---|---|
| Starting procedure is **not** correct | Verify the correct starting procedure. Refer to Section 1. |
| OK | |
| Coolant temperature is below specification | Refer to the OEM service manual. |
| OK | |
| Intake manifold air temperature is below specification | Refer to the OEM service manual. |
| OK | |
| Fuel rate is low, fuel pressure is low, intake manifold pressure is low | Check the fuel pump output pressure, pulsation damper, and pressure regulator. Replace the fuel pump if necessary. |
| OK | |
| Injection timing incorrect | Check injection timing. Refer to the OEM service manual. |
| OK | |
| Fuel pump return overflow valve is malfunctioning | Inspect the return overflow valve. Replace if necessary. Refer to the OEM service manual. |
| OK | |
| Temperature switch failed | With the key system on, short out the harness at the temperature switch. If it engages, troubleshoot the sensor or check for air in the coolant system. Remove the sensor and make sure at ambient conditions the sensor is open; and at the correct temperature, 91°C [196°F], make sure the sensor closes. Replace if necessary. |
| OK | |

(Continued)

# Smoke, White — Excessive (Continued)

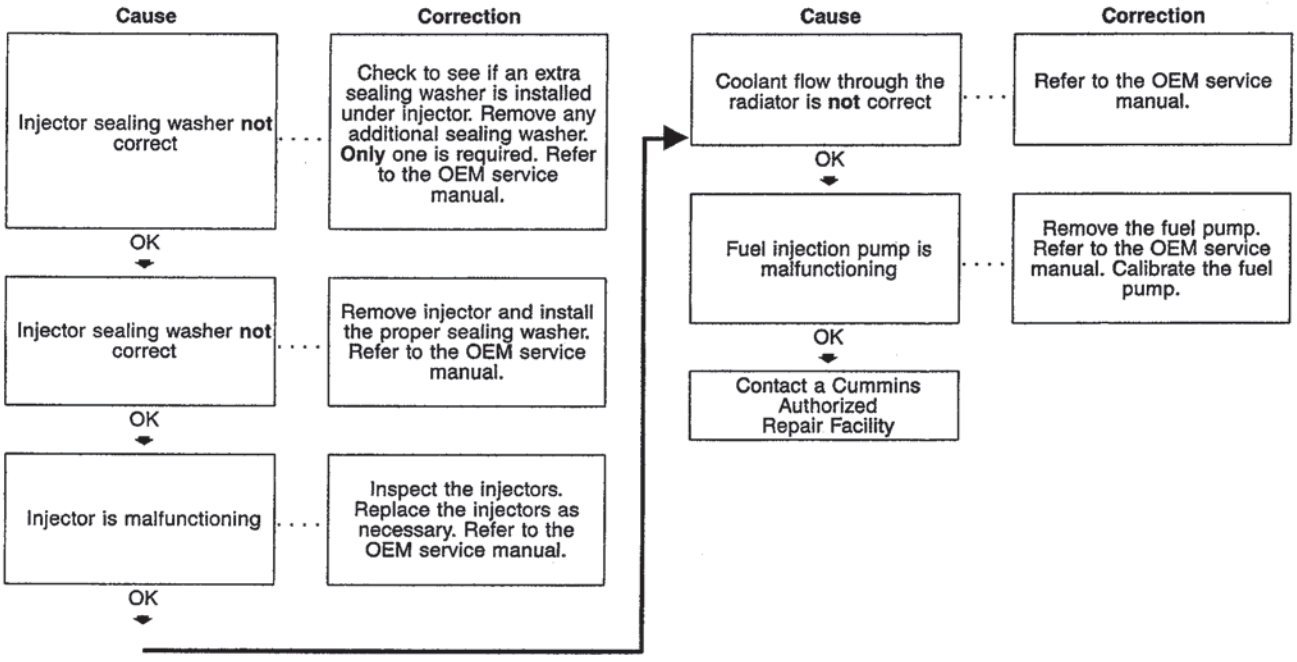

# NOTES

# Section V - Maintenance Specifications

## Section Contents

| | Page |
|---|---|
| **Arctic Operation** | V-14 |
| Preparatory | V-14 |
| **Capscrew Markings and Torque Values** | V-23 |
| Capscrew Markings and Torque Values - Metric | V-24 |
| Capscrew Markings and Torque Values - U.S. Customary | V-25 |
| General Information | V-23 |
| **Coolant Recommendations and Specifications** | V-15 |
| Preparatory | V-15 |
| **Engine Component Torque Values** | V-17 |
| General Information | V-17 |
| **Fuel Recommendations and Specifications** | V-8 |
| Fuel Recommendations | V-8 |
| **Lubricating Oil Recommendations and Specifications** | V-10 |
| Engine Dataplate | V-13 |
| General Information | V-10 |
| New Engine Break-in Oils | V-12 |
| **Specifications** | V-1 |
| Air Intake System | V-5 |
| Batteries (Specific Gravity) | V-7 |
| Cooling System | V-4 |
| Electrical System | V-6 |
| Fuel System | V-6 |
| General Specifications | V-1 |

Page

Lubricating Oil System ..... V-2

# Specifications

## General Specifications

### General Engine Data (automotive)

| | 6C8.3 | 6CT8.3 | 6CTA8.3 | C8.3 |
|---|---|---|---|---|
| Bore | 114 mm [4.49 in] | 114 mm [4.49 in] | 114 mm [4.49 in] | 114 mm [4.49 in] |
| Stroke | 135 mm [5.32 in] | 135 mm [5.32 in] | 135 mm [5.32 in] | 135 mm [5.32 in] |
| Displacement | 8.27 liters [504.7 C.I.D.] | 8.27 liters [504.7 C.I.D.] | 8.27 liters [504.7 C.I.D.] | 8.27 liters [504.7 C.I.D.] |
| Engine Weight (dry) with Standard Accessories | 603 to 612 kg [1330 to 1350 lb] | 603 to 612 kg [1330 to 1350 lb] | 603 to 612 kg [1330 to 1350 lb] | 603 to 612 kg [1330 to 1350 lb] |
| Wet Weight | 635 to 658 kg [1400 to 1450 lb] | 635 to 658 kg [1400 to 1450 lb] | 635 to 658 kg [1400 to 1450 lb] | 635 to 658 kg [1400 to 1450 lb] |
| Firing Order | 1-5-3-6-2-4 | 1-5-3-6-2-4 | 1-5-3-6-2-4 | 1-5-3-6-2-4 |
| Valve Clearances: | | | | |
| Intake | 0.30 mm [0.012 in] | 0.30 mm [0.012 in] | 0.30 mm [0.012 in] | 0.30 mm [0.012 in] |
| Exhaust | 0.61 mm [0.024 in] | 0.61 mm [0.024 in] | 0.61 mm [0.024 in] | 0.61 mm [0.024 in] |
| Compression Ratio | 16.4:1 | 17.3:1 | 16.5:1 | 17.3:1*/18:1** |
| Rotation, Viewed from the Front of the Engine | **Clockwise** | **Clockwise** | **Clockwise** | **Clockwise** |

** **NOTE**: High Torque
* **NOTE**: Low Torque

## Lubricating Oil System

Lubricating Oil Pressure at Idle (minimum allowable):
- 6C8.3 ..... 69 kPa [10 psi]
- 6CT8.3 ..... 69 kPa [10 psi]
- 6CTA8.3 ..... 69 kPa [10 psi]
- C8.3 ..... 69 kPa [10 psi]

Lubricating Oil Pressure at Rated (minimum allowable):
- 6C8.3 ..... 207 kPa [30 psi]
- 6CT8.3 ..... 207 kPa [30 psi]
- 6CTA8.3 ..... 207 kPa [30 psi]
- C8.3 ..... 207 kPa [30 psi]

Regulating Valve Opening Pressure:
- 6C8.3 ..... 518 kPa [75 psi]
- 6CT8.3 ..... 518 kPa [75 psi]
- 6CTA8.3 ..... 518 kPa [75 psi]
- C8.3 ..... 518 kPa [75 psi]

Differential Pressure to Open the Filter Bypass Valve:
- 6C8.3 ..... 172 kPa [25 psi]
- 6CT8.3 ..... 172 kPa [25 psi]
- 6CTA8.3 ..... 172 kPa [25 psi]
- C8.3 ..... 172 kPa [25 psi]

Lubricating Oil Capacity of Pan:
- High:
  - 6C8.3 ..... 18.9 liters [20 qt]
  - 6CT8.3 ..... 18.9 liters [20 qt]
  - 6CTA8.3 ..... 18.9 liters [20 qt]
  - C8.3 ..... 18.9 liters [20 qt]

Low:

| | |
|---|---|
| 6C8.3 | 15.1 liters [16 qt] |
| 6CT8.3 | 15.1 liters [16 qt] |
| 6CTA8.3 | 15.1 liters [16 qt] |
| C8.3 | 15.1 liters [16 qt] |

## Cooling System

| Cooling System | 6C8.3 | 6CT8.3 | 6CTA8.3 | C8.3 |
|---|---|---|---|---|
| Coolant capacity (engine **only**) | 9.9 liters [10.5 qt] | 9.9 liters [10.5 qt] | 9.9 liters [10.5 qt] | 9.9 liters [10.5 qt] |
| Standard modulating thermostat | Start 81°C [178°F] Fully open 95°C [203°F] | Start 81°C [178°F] Fully open 95°C [203°F] | Start 81°C [178°F] Fully open 95°C [203°F] | Start 81°C [178°F] Fully open 95°C [203°F] |
| Pressure cap | 50 kPa [7 psi] | 50 kPa [7 psi] | 50 kPa [7 psi] | 50 kPa [7 psi] |
| Maximum allowable top tank temperature | 100°C [212°F] | 100°C [212°F] | 100°C [212°F] | 100°C [212°F] |
| Minimum recommended top tank temperature | 70°C [158°F] | 70°C [158°F] | 70°C [158°F] | 70°C [158°F] |

## Air Intake System

Intake Restriction:
- Maximum:
  - with Clean Air Filter ..... 254 mm $H_2O$ [10 in $H_2O$]
  - with Dirty Air Filter ..... 635 mm $H_2O$ [25 in $H_2O$]

Exhaust:
- Maximum without Catalyst Restriction ..... 76.2 mm Hg [3 in Hg]
- Maximum with Catalyst Restriction ..... 152 mm Hg [6 in Hg]

## Fuel System

| Fuel System | 6C8.3 | 6CT8.3 | 6CTA8.3 | C8.3 |
|---|---|---|---|---|
| Maximum Fuel Filter Pressure Drop across Filters | 34 kPa [5 psi] | 34 kPa [5 psi] | 34 kPa [5 psi] | 34 kPa [5 psi] |
| Maximum Inlet Restriction to Fuel Transfer Pump | 100 mm Hg [4 in Hg] | 100 mm Hg [4 in Hg] | 100 mm Hg [4 in Hg] | 100 mm Hg [4 in Hg] |
| Maximum Allowable Return Line Restriction | 518 mm Hg [20.4 in Hg] | 518 mm Hg [20.4 in Hg] | 518 mm Hg [20.4 in Hg] | 518 mm Hg [20.4 in Hg] |

## Electrical System

### Minimum Recommended Battery Capacity

| Battery Size | Ambient Temperatures -18°C [0°F] | | 0°C [32°F] | |
|---|---|---|---|---|
| | Cold Cranking Amperes | Reserve Capacity[1] Amperes | Cold Cranking Amperes | Reserve Capacity[1] Amperes |
| 12 VDC | 1800 | 640 | 1280 | 480 |
| 24 VDC[2] | 900 | 320 | 640 | 240 |

1. The number of plates within a given battery size determines reserve capacity. Reserve capacity determines the duration of sustained cranking.
2. Per battery (two 12-VDC batteries in series) CCA ratings are based on -18°C [0°F].

## Batteries (Specific Gravity)

| Specific Gravity at 27°C [81°F] | State of Charge |
|---|---|
| 1.260 to 1.280 | 100% |
| 1.230 to 1.250 | 75% |
| 1.200 to 1.220 | 50% |
| 1.170 to 1.190 | 25% |
| 1.110 to 1.130 | Discharged |

# Fuel Recommendations and Specifications

## Fuel Recommendations

**⚠ WARNING ⚠**

**Do not mix gasoline or alcohol with diesel fuel. This mixture can cause an explosion.**

**⚠ CAUTION ⚠**

**Due to the precise tolerances of diesel injection systems, it is extremely important that the fuel be kept clean and free of dirt or water. Dirt or water in the system can cause severe damage to both the fuel injection pump and the nozzles.**

**NOTE:** The use of diesel fuel blended with lubricating oil is **not** acceptable for engines equipped with a catalytic converter. Automotive engines for model year 1994 and beyond are equipped with a catalyst as a part of emission control.

Use ASTM No. 2 D fuel with a minimum cetane number of 40. No. 2 diesel fuel gives the best economy and performance under most operating conditions. Fuels with cetane numbers higher than 40 are sometimes needed in high altitudes or extremely low ambient temperatures to prevent misfires and excessive smoke.

At operating temperatures below 0°C [32°F], use a blend of No. 1 D and No. 2 D fuels, also known as “winterized” No. 2 D.

**NOTE:** No. 1 D fuel can be used; however, fuel economy and performance will decrease.

Use low-sulfur content fuel having a cloud point that is at least 10 degrees below the lowest expected fuel temperature. Cloud point is the temperature at which wax crystals begin to form in diesel fuel.

The viscosity of the fuel **must** be kept above 1.3 centistokes at 40°C [104°F] to provide adequate fuel system lubrication.

For a more detailed description of fuel properties, refer to Fuel for Cummins Engines, Bulletin No. 3379001-04.

The following chart lists acceptable alternate fuels for midrange engines.

| Fuel Type | Acceptable Alternate Fuels Component Wear/Durability | |
|---|---|---|
| | Bosch In-Line Pumps | Nippondenso EP-9 |
| No. 1 D Diesel | OK | OK |
| No. 2 Fuel Oil | OK | OK |
| No. 1-K kerosene | OK | OK |
| No. 2-K kerosene | OK | OK |
| Jet-A | OK | OK |
| Jet A-1 | OK | OK |
| JP-5 | OK | OK |
| JP-8 | OK | OK |
| Jet-B | **Not** ok | **Not** ok |
| JP-4 | **Not** ok | **Not** ok |
| Cite | **Not** ok | **Not** ok |

**NOTE:** Any adjustment to compensate for reduced performance with a fuel system using alternate fuel is **not** warrantable.

**NOTE:** Wear on any midrange fuel injection pump component attributed to the lack of lubrication in the fuel is **not** a warrantable repair.

# Lubricating Oil Recommendations and Specifications

## General Information

The use of quality engine lubricating oils, combined with appropriate oil drain and filter change intervals, is a critical factor in maintaining engine performance and durability.

Cummins Engine Company, Inc. recommends the use of a high-quality SAE 15W-40 heavy-duty engine lubricating oil (such as Cummins Premium Blue®), which meets the American Petroleum Institute (API) performance classification CF4/SG.

**NOTE:** CE/SG/SF engine oils can be used in areas where CF4 oil is **not** yet available, but the oil change interval **must** be reduced to one half the interval given in the maintenance schedule.

A sulfated ash limit of 1.0 mass percent is suggested for optimum valve and piston deposit and lubricating oil consumption control. The sulfated ash **must not** exceed 1.85 mass percent.

### Lubricating Oil Viscosity Recommendations

Multiviscosity lubricating oil improves lubricating oil consumption control and engine cranking in cold temperatures while maintaining lubrication at high operating temperatures.

While 15W-40 oil is recommended for most climates, refer to the accompanying table for oil viscosity recommendations for extreme climates.

For further details and discussion of engine lubricating oils for Cummins engines, refer to Bulletin No. 3810340, Cummins Engine Oil Recommendations.

**⚠ CAUTION ⚠**

**Limited use of low-viscosity lubricating oils, such as 10W-30, can perhaps be used to aid in starting the engine and providing sufficient oil flow at ambient temperatures below -5°C [23°F]. However, continuous use of low-viscosity lubricating oils can decrease engine life due to wear. Refer to the accompanying chart.**

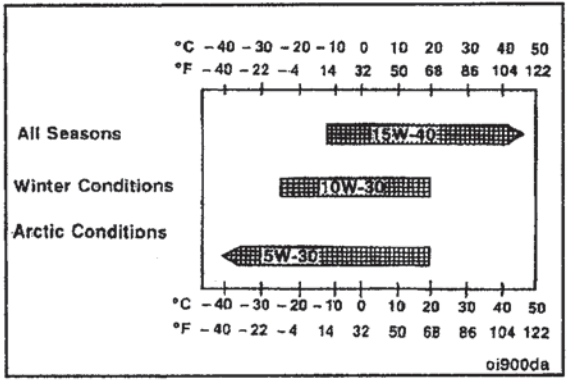

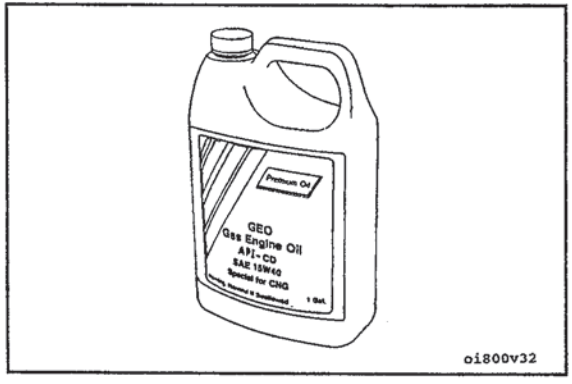


## New Engine Break-in Oils

Special “break-in” engine lubricating oils are **not** recommended for new or rebuilt Cummins engines. Use the same type of oil during the “break-in” as that which is used in normal operation.

Additional information regarding lubricating oil availability throughout the world is available in the E.M.A. Lubricating Oils Data Book for Heavy-Duty Automotive and Industrial Engines. The data book can be ordered from the Engine Manufacturers Association, One Illinois Center, 111 East Wacker Driver, Chicago, IL, U.S.A. 60601. The telephone number is (312) 644-6610.

The API service symbols are shown in the accompanying illustration. The upper half of the symbol displays the appropriate oil categories; the lower half can contain words to describe oil energy conserving features. The center section indetifies the SAE oil viscosity grade.

## Engine Dataplate

Fleetguard® Part No. LF3000 or Cummins Part No. 3318853.

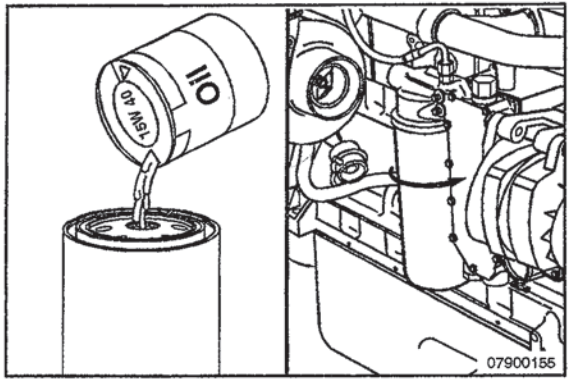

# Arctic Operation

## Preparatory

**△ CAUTION △**

**The use of a synthetic-base oil does not justify extended lubricating oil change intervals. Extended oil change intervals can decrease engine life due to factors such as corrosion, deposits, and wear.**

If an engine is operated in ambient temperatures consistently below -23°C [-9°F] and there are no provisions to keep the engine warm when it is **not** in operation, use a synthetic CC/CE engine lubricating oil with adequate low-temperature properties such as 5W-20 or 5W-30.

The oil supplier **must** be responsible for meeting the performance service specifications.

# Coolant Recommendations and Specifications

## Preparatory

### Antifreeze

Use low-silicate antifreeze that meets ASTM4985 test (GM6038M specification) criteria.

Antifreeze **must** be used in any climate for both freezing and boiling point protection. Cummins recommends a 50-percent concentration level (40-percent to 60-percent range) of ethylene glycol or propylene glycol in most climates. Antifreeze at 68-percent concentration provides the maximum freezing protection and **must never** be exceeded under any condition. Antifreeze protection decreases above 68 percent.

| Ethylene Glycol | Propylene Glycol |
|---|---|
| 40% = -23°C [-9°F] | 40% = -21°C [-6°F] |
| 50% = -37°C [-35°F] | 50% = -33°C [-27°F] |
| 60% = -54°C [-65°F] | 60% = -49°C [-56°F] |
| 68% = -71°C [-96°F] | 68% = -63°C [-81°F] |

Antifreeze concentration **must** be checked using a refractometer (such as Fleetguard Part No. CC2800). “Floating ball”-type density testers or hydrometers are **not** accurate enough for use with heavy-duty diesel cooling systems.

The coolant **must** be drained and replaced every 385,000 km [240,000 mi], 6000 hours, or 2 years (whichever occurs first) to eliminate buildup of harmful chemicals.

### Supplemental Coolant Additives

Supplemental coolant additives are recommended for all Cummins cooling systems. Antifreeze alone does **not** provide sufficient corrosion protection for heavy-duty diesel engines.

DCA4 is the recommended SCA for all Cummins engines. Other brands can be used, provided they provide adequate engine protection and do **not** cause seal or gasket degradation or corrosion/fouling.

The recommended concentration level of DCA4 is 1.5 units per 3.7 liters [1 US gal]. The DCA4 concentration **must never** exceed 3.0 units per 3.7 liters [1 U.S. gal] nor fall below 1.2 units per 3.7 liters [1 U.S. gal].

Supplemental coolant additives deplete during normal engine operation. Cummins recommends that the level be maintained by installation of a service coolant filter on the engine at every 10,000-km [6000-mi], 250-hour, or 3-month interval.

### Coolant Test Kits

As noted above, the primary method is to maintain proper DCA4 concentration levels by changing the service coolant filter at every 10,000 km [6000 mi], 250 hours, or 3 months. Fleetguard® DCA4 "dip strip" test kit, Part No. CC 2626, or Fleetguard Monitor C™, Part No. CC2700, **must** be used if testing is deemed necessary due to:

- Addition of untreated makeup coolant in excess of 5.7 liters [6 qt] between maintenance intervals
- Troubleshooting of cooling system problems in the fleet (such as corrosion or seal leakage)
- An optional program in some fleets to monitor SCA levels to determine if maintenance intervals are acceptable.

**NOTE:** The practice of using a test kit to determine when to add or change the coolant filter is specifically **not** recommended. No other test kit (such as the Fleetguard titration test kit, Part No. 3300846-S or the 3825379-S) can be used on Cummins engines with DCA4.

| Fleetguard® Part No. | Cummins Part No. | DCA4 Units |
|---|---|---|
| **DCA4 Liquid** | | |
| DCA 60L | 3315459 | 4* |
| **DCA4 Filter** | | |
| WF-2070 | 3318157 | 2 |
| WF-2071 | 3315116 | 4 |
| WF-2072 | 3318201 | 6 |
| WF-2073 | 3315115 | 8 |

| Fleetguard® Part No. | Cummins Part No. | DCA4 Units |
|---|---|---|
| WF-2074 | 3316053 | 12 |
| WF-2077 | None | 0 |

**NOTE:** *If DCA60L is used, do **not** use a coolant filter that contains coolant additives. The combination of liquid and filter coolant additives will result in overconcentration.

| | Maintenance Intervals | |
|---|---|---|
| **Total Cooling System Capacity Liters [US gal] (A)** | **Initial Charge (B)** | **3 Months, 250 Hours, or 10,000 km [6000 mi]** |
| 30 to 57 [6 to 12] | WF-2074 | WF-2070 |

A. Consult the vehicle equipment manufacturer's maintenance information for total cooling system capacity.

B. After draining and replacing the coolant, install the initial pre charge coolant filter to provide the recommended level of DCA4 concentration.

C. Change coolant filters at regular intervals to protect the cooling system.

D. Check the coolant additive concentration regularly. Check cooling systems using DCA4 **only** with DCA4 coolant test kit, Fleetguard® Part No. CC-2626.

# Engine Component Torque Values

## General Information

| Socket or Wrench Size mm [in] | | Torque N•m | ft-lb |
|---|---|---|---|
| 10 | Aftercooler mounting | 24 | [212 in-lb] |
| 8 | Aftercooler water hose clamp | 5 | [44 in-lb] |

| Socket or Wrench Size mm [in] | | Torque N•m | ft-lb |
|---|---|---|---|
| 13 | Alternator link | 24 | [212 in-lb] |
| 13 | Alternator mounting bolt (10 to 15 SI) | 43 | [32] |
| 10 | Alternator support (upper) | 24 | [212 in-lb] |
| 13 | Belt tensioner to bracket | 43 | [32] |
| 5 hex | Belt tensioner bracket to block | 24 | [212 in-lb] |
| 18 | Vibration damper | 200 | [148] |
| 8 | Crossover clamp | 5 | [44 in-lb] |
| 15 | Exhaust manifold | 43 | [32] |
| 16 | Exhaust outlet pipe mounting | 43 | [32] |
| 11 | Exhaust outlet pipe, v-band clamp | 5 | [44 in-lb] |
| 10 | Fan bracket mounting | 24 | [212 in-lb] |
| 13 | Fan hub | 43 | [32] |
| 16 | Fan hub (60-mm bolt circle) | 43 | [32] |
| 24 | Flame start aid | 40 | [30] |
| 19 | Flywheel | 137 | [101] |
| 18 | Flywheel housing | 77 | [57] |
| [1/2] | Flywheel housing drain plug | 43 | [32] |
| — | Front gear cover cap | -Hand-tighten- | |
| 15 | Front engine support mounting | 112 | [83] |
| 17 | Fuel banjo screw (in filter head) | 24 | [212 in-lb] |
| 10 | Fuel vent screw in banjo | 9 | [80 in-lb] |
| 75 to 80 | Fuel filter | 3/4 turn after contact | |
| 19 | Fuel low-pressure supply and return at fuel injection pump | 24 | [212 in-lb] |

| Socket or Wrench Size mm [in] | | Torque N•m | ft-lb |
|---|---|---|---|
| 10 | Fuel low-pressure return at filter head | 9 | [80 in-lb] |
| 24 | Fuel filter adapter nut | 32 | [24] |
| 17 | Fuel line fitting (high pressure) | 24 | [212 in-lb] |
| 19 | Fuel line fitting (high pressure) | 30 | [22] |
| 22 | Fuel injection pump drive gear (A) | 70 | [52] |
| 27 | Fuel injection pump drive gear (MW) | 105 | [77] |
| 30 | Fuel injection pump drive gear (P) | 131 | [97] |
| 24 | Fuel injection pump lock | 17 | [150 in-lb] |
| 15 | Fuel injection pump mounting nut | 43 | [32] |
| 10 | Fuel injection pump to bracket | 24 | [212 in-lb] |
| 10 | Fuel injection pump vent screw (PES.MW) | 5 | [44 in-lb] |
| 15 | Fuel solenoid bracket | 43 | [32] |
| 15 | Fuel injection pump support Bracket to cylinder block | 43 | [32] |
| 8 | Fuel solenoid mounting | 10 | [89 in-lb] |
| 10 | Fuel transfer pump mounting/cover plate | 24 | [212 in-lb] |
| 18 | Engine lifting bracket | 77 | [57] |
| 10 | Gear cover | 24 | [212 in-lb] |
| 10 | Injector fuel drain manifold | 9 | [80 in-lb] |
| 10 | Injector retaining capscrew | 24 | [212 in-lb] |
| 10 | Intake manifold cover | 24 | [212 in-lb] |
| 118 to 131 | Lubricating oil filter | 3/4 turn after contact | |
| 10 | Lubricating oil cooler cover | 24 | [212 in-lb] |
| 17 | Lubricating oil pan drain plug | 80 | [59] |
| 17 | Lubricating oil pan heater plug | 80 | [59] |

| Socket or Wrench Size mm [in] | | Torque N•m | ft-lb |
|---|---|---|---|
| 32 | Lubricating oil pressure regulator valve | 80 | [59] |
| 32 | Lubricating oil thermostat | 50 | [37] |
| 15 | PTO adapter | 77 | [57] |
| 13 | PTO adapter cover plate A drive | 43 | [32] |
| 15 | PTO adapter cover plate B drive | 77 | [57] |
| [3/4] | PTO gear nut A drive | 100 | [74] |
| [15/16] | PTO gear nut B drive | 134 | [99] |
| [11/16] | PTO flange companion | 85 | [63] |
| 14 | Rocker lever nut | 24 | [212 in-lb] |
| 15 | Stater mounting (12-point) | 77 | [57] |
| 10 | Tachometer drive retainer | 3 | [27 in-lb] |
| 10 | Thermostat housing | 24 | [212 in-lb] |
| T-25 Torx | Timing pin flange mounting | 5 | [44 in-lb] |
| 13 | Turbine housing | 11 | [97 in-lb] |
| 11 | Turbocharger compressor housing clamp | 6 | [53 in-lb] |
| 15 | Turbocharger mounting nut | 32 | [24] |
| 10 | Turbocharger drain tube | 24 | [212 in-lb] |
| 16 | Turbocharger oil supply (both ends) | 35 | [26] |
| 8 | Water hose clamps | 5 | [44 in-l |
| [3/8] | Water inlet plugs | 34 | [25] |
| 13 | Water pump mounting | 24 | [212 in-lb] |
| 15 | Valve cover | 24 | [212 in-lb] |
| | Valve cover oil fill | Hand-tighten | |

Use the sealants listed below or sealants containing equivalent properties.

| Description | Sealing Method |
|---|---|
| 1. Pipe plugs | Precoated Teflon™ or pipe sealer |
| 2. Gaskets | No sealant required |
| 3. Cup plugs | Loctite 277 or Cummins sealant, Part No. 3375068 |
| 4. O-rings | No sealant required |
| 5. Rear camshaft Expansion plug | Loctite 277 or Cummins sealant, Part No. 3375068 |
| 6. Fuel pump studs | Loctite 242 |
| 7. Turbocharger drain (in block) | Loctite 277 or Cummins sealant, Part No. 3375068 |
| 8. Dipstick tube (in block) | Loctite 277 or Cummins sealant, Part No. 3375068 |
| 9. Wet flywheel housing to block | Three-Bond sealant, Part No. 3823494 |
| 10. Rear seal (in rear cover) | No sealant |
| 11. Timing pin housing capscrews | No sealant |
| 12. Side oil fill | Loctite 277 or Cummins sealant, Part No. 3375068 |

Use the lubricants listed below or lubricants containing equivalent properties.

| Parts | Lubricant Required |
|---|---|
| Connecting rod bearings | Lubriplate™ 105 |
| Main bearings | Lubriplate™ 105 |
| Camshaft lobes and journals | Lubriplate™ 105 |
| Tappets | Lubriplate™ 105 |
| Pistons | 15W-40 engine lubricating oil |
| Piston rings | 15W-40 engine lubricating oil |
| Piston pin | 15W-40 engine lubricating oil |

| Parts | Lubricant Required |
|---|---|
| Rocker assemblies | 15W-40 engine lubricating oil |
| Push tubes | 15W-40 engine lubricating oil + Lubriplate 105 in cup |
| Cylinder liner o-ring | 15W-40 engine lubricating oil. |
| Capscrews - under head and on threads, as follows: | |
| Main bearing capscrews | 15W-40 engine lubricating oil |
| Cylinder head capscrews | 15W-40 engine lubricating oil |
| Connecting rod capscrews | 15W-40 engine lubricating oil |
| Flywheel mounting capscrews | 15W-40 engine lubricating oil |
| Damper mounting capscrews | 15W-40 engine lubricating oil |
| All other capscrews | Preservative lubricating oil or 15W-40 engine lubricating oil. |
| Valve stems and seals | 15W-40 engine lubricating oil |
| Lubricating oil pressure regulator | 15W-40 engine lubricating oil. |

# Capscrew Markings and Torque Values

## General Information

**⚠ CAUTION ⚠**

**When replacing capscrews, always use a capscrew of the same measurement and strength as the capscrew being replaced. Using the wrong capscrews can result in engine damage.**

Metric capscrews and nuts are identified by the grade number stamped on the head of the capscrew or on the surface of the nuts. U.S. Customary capscrews are identified by radial lines stamped on the head of the capscrew.

The following examples indicate how capscrews are identified:

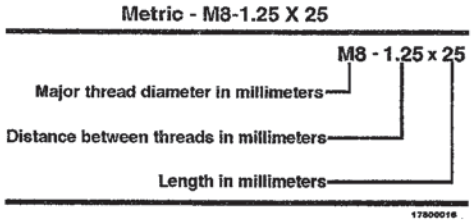


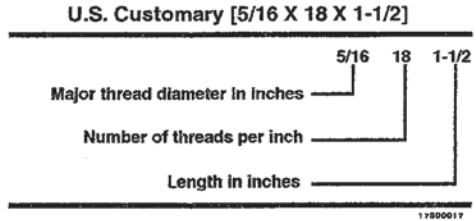


**NOTES:**

1. **Always** use the torque values listed in the following tables when specific torque values are **not** available.
2. Do **not** use the torque values in place of those specified in other sections of this manual.
3. The torque values in the table are based on the use of lubricated threads.
4. When the ft-lb value is less than 10, convert the ft-lb value to in-lb to obtain a better torque with an in-lb torque wrench. Example: 6 ft-lb equals 72 in-lb.

# Capscrew Markings and Torque Values - Metric

| Commercial Steel Class | 8.8 | 10.9 | 12.9 |
|---|---|---|---|
| Capscrew Head Markings | 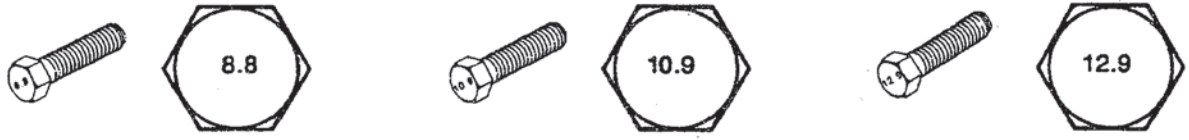 | | |



| Body Size | Torque | | | | Torque | | | | Torque | | | |
|---|---|---|---|---|---|---|---|---|---|---|---|---|
| Diameter | Cast Iron | | Aluminum | | Cast Iron | | Aluminum | | Cast Iron | | Aluminum | |
| mm | N•m | ft-lb | N•m | ft-lb | N•m | ft-lb | N•m | ft-lb | N•m | ft-lb | N•m | ft-lb |
| 6 | 9 | 5 | 7 | 4 | 13 | 10 | 7 | 4 | 14 | 9 | 7 | 4 |
| 7 | 14 | 9 | 11 | 7 | 18 | 14 | 11 | 7 | 23 | 18 | 11 | 7 |
| 8 | 23 | 17 | 18 | 14 | 33 | 25 | 18 | 14 | 40 | 29 | 18 | 14 |
| 10 | 45 | 33 | 30 | 25 | 65 | 50 | 30 | 25 | 70 | 50 | 30 | 25 |
| 12 | 80 | 60 | 55 | 40 | 115 | 85 | 55 | 40 | 125 | 95 | 55 | 40 |
| 14 | 125 | 90 | 90 | 65 | 180 | 133 | 90 | 65 | 195 | 145 | 90 | 65 |
| 16 | 195 | 140 | 140 | 100 | 280 | 200 | 140 | 100 | 290 | 210 | 140 | 100 |
| 18 | 280 | 200 | 180 | 135 | 390 | 285 | 180 | 135 | 400 | 290 | 180 | 135 |
| 20 | 400 | 290 | — | — | 550 | 400 | — | — | — | — | — | — |

# Capscrew Markings and Torque Values - U.S. Customary

| SAE Grade Number | 5 | 8 |
|---|---|---|
| Capscrew Head Markings |  | 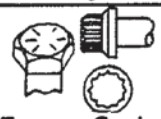 |
| These are all SAE Grade 5 (3 line) | | |
|  | | |

| Capscrew Body Size | Capscrew Torque - Grade 5 Capscrew | | | | Capscrew Torque - Grade 8 Capscrew | | | |
|---|---|---|---|---|---|---|---|---|
| | Cast Iron | | Aluminum | | Cast Iron | | Aluminum | |
| | N•m | ft-lb | N•m | ft-lb | N•m | ft-lb | N•m | ft-lb |
| 1/4 - 20 | 9 | 7 | 8 | 6 | 15 | 11 | 8 | 6 |
| 1/4 - 28 | 12 | 9 | 9 | 7 | 18 | 13 | 9 | 7 |
| 5/16 - 18 | 20 | 15 | 16 | 12 | 30 | 22 | 16 | 12 |
| 5/16 - 24 | 23 | 17 | 19 | 14 | 33 | 24 | 19 | 14 |
| 3/8 - 16 | 40 | 30 | 25 | 20 | 55 | 40 | 25 | 20 |
| 3/8 - 24 | 40 | 30 | 35 | 25 | 60 | 45 | 35 | 25 |
| 7/16 - 14 | 60 | 45 | 45 | 35 | 90 | 65 | 45 | 35 |
| 7/16 - 20 | 65 | 50 | 55 | 40 | 95 | 70 | 55 | 40 |
| 1/2 - 13 | 95 | 70 | 75 | 55 | 130 | 95 | 75 | 55 |
| 1/2 - 20 | 100 | 75 | 80 | 60 | 150 | 110 | 80 | 60 |
| 9/16 - 12 | 135 | 100 | 110 | 80 | 190 | 140 | 110 | 80 |
| 9/16 - 18 | 150 | 110 | 115 | 85 | 210 | 155 | 115 | 85 |
| 5/8 - 11 | 180 | 135 | 150 | 110 | 255 | 190 | 150 | 110 |
| 5/8 - 18 | 210 | 155 | 160 | 120 | 290 | 215 | 160 | 120 |
| 3/4 - 10 | 325 | 240 | 255 | 190 | 460 | 340 | 255 | 190 |
| 3/4 - 16 | 365 | 270 | 285 | 210 | 515 | 380 | 285 | 210 |
| 7/8 - 9 | 490 | 360 | 380 | 280 | 745 | 550 | 380 | 280 |
| 7/8 - 14 | 530 | 390 | 420 | 310 | 825 | 610 | 420 | 310 |
| 1 - 8 | 720 | 530 | 570 | 420 | 1100 | 820 | 570 | 420 |
| 1 - 14 | 800 | 590 | 650 | 480 | 1200 | 890 | 650 | 480 |

# NOTES

# Section W - Warranty

## Section Contents

| | Page |
|---|---|
| All Bus Categories Worldwide (Except U.S./Canada Diesel Powered School Buses) | W-6 |
| B5.9 & C8.3 Engines United States and Canada Recreational Vehicle | W-28 |
| C Engines United States and Canada Automotive | W-1 |
| C Series Engines Australia and New Zealand Automotive | W-44 |
| California Emission Control System Warranty, On-Highway | W-18 |
| Moteurs tout terrain Etats-Unis et Canada | W-22 |
| Off-Highway Engines International | W-39 |
| Off-Highway Engines United States and Canada | W-33 |
| United States and Canada Diesel Engine School Bus | W-12 |

THIS PAGE LEFT INTENTIONALLY BLANK

# C Engines United States and Canada Automotive

## Coverage

### Products Warranted

This warranty applies to new C Engines sold by Cummins and delivered to the first user on or after July 1, 1991, that are used in automotive on-highway applications in the United States* or Canada with three exceptions. Cummins provides different warranty coverage for engines used in fire truck, bus and coach, and recreational vehicle applications.

### Base Engine Warranty

This warranty covers any failures of the Engine which result, under normal use and service, from defects in material or workmanship (Warrantable Failure). This coverage begins with the sale of the engine by Cummins and continues for the Duration stated below. The Duration commences on the date of delivery of the Engine to the first user.

| | DURATION (whichever occurs first) | |
|---|---|---|
| ENGINE HORSEPOWER | YEARS | MILES (KILOMETERS) |
| Up to 225 | 2 | unlimited |
| 226 and over | 2 | 100,000 (160,935 kilometers) |

Additional coverage is outlined in the Emission Warranty section.

### Consumer Products

This warranty on Consumer Products in the United States is a **LIMITED** warranty. **CUMMINS IS NOT RESPONSIBLE FOR INCIDENTAL OR CONSEQUENTIAL DAMAGES.** Any implied warranties applicable to Consumer Products in the United States terminate concurrently with the expiration of the express warranties applicable to such products. In the United States, some states do not allow the exclusion of incidental or consequential damages, or limitations on how long an implied warranty lasts, so the limitations or exclusions herein may not apply to you.

**These warranties are made to all Owners in the chain of distribution and Coverage continues to all subsequent Owners until the end of the periods of Coverage.**

## Cummins Responsibilities

Cummins will pay for all parts and labor needed to repair the damage to the Engine resulting from a Warrantable Failure.

Cummins will pay for the lubricating oil, antifreeze, filter elements, and other maintenance items that are not reusable due to the Warrantable Failure.

Cummins will pay for reasonable labor costs for Engine removal and reinstallation when necessary to repair a Warrantable Failure.

Cummins will pay reasonable costs for towing a vehicle disabled by a Warrantable Failure to the nearest authorized repair station for the first year from the date of delivery of the Engine to the first user or the duration of the warranty, whichever occurs first. In lieu of the towing expense, Cummins will pay reasonable costs for mechanics to travel to and from the location of the vehicle, including meals, mileage, and lodging when the repair is performed at the site of the failure.

## Owner Responsibilities

Owner is responsible for the operation and maintenance of the Engine as specified in the applicable Cummins Operation and Maintenance Manual. Owner is also responsible for providing proof that all recommended maintenance has been performed.

Before the expiration of the applicable warranty, Owner must notify a Cummins distributor, authorized dealer or other repair location approved by Cummins of any Warrantable Failure and make the engine available for repair by such facility. Except for Engines disabled by Warrantable Failures during the first year or the duration of the warranty, whichever occurs first, Owner must deliver the Engine to the repair facility. Locations in the United States and Canada are listed in the Cummins United States and Canada Sales and Service Directory; other locations are listed in the Cummins International Sales and Service Directory.

Owner is responsible for the cost of lubricating oil, antifreeze, filter elements and other maintenance items provided during warranty repairs unless such items are not reusable due to the Warrantable Failure.

Owner is responsible for communication expenses, meals, lodging and similar costs incurred as a result of a Warrantable Failure.

Owner is responsible for non-Engine repairs and for ''downtime'' expenses, cargo damage, fines, all applicable taxes, all business costs and other losses resulting from a Warrantable Failure.

## Limitations

Cummins is not responsible for failures or damage resulting from what Cummins determines to be abuse or neglect, including, but not limited to: operation without adequate coolants or lubricants; overfueling; overspeeding; lack of maintenance of lubricating, cooling or intake systems; improper storage, starting, warm-up, run-in or shutdown practices; unauthorized modifications of the Engine. Cummins is also not responsible for failures caused by incorrect oil or fuel or by water, dirt or other contaminants in the fuel or oil.

This warranty does not apply to accessories supplied by Cummins which bear the name of another company. This category includes, but is not limited to: alternators, starters, fans, air conditioning compressors, clutches, filters, transmissions, torque converters, vacuum pumps, power steering pumps, fan drives and air compressors.

Failures resulting in excessive oil consumption are covered for the duration of the coverage or 100,000 miles (160,935 kilometers) or 7000 hours from the date of delivery of the Engine to the first user, whichever of the three occurs first. Before a claim for excessive oil consumption will be considered, Owner must submit adequate documentation to show that consumption exceeds Cummins published standards.

Failures of belts and hoses supplied by Cummins are covered for the first year from the date of delivery of the Engine to the first user or the duration of the warranty, whichever occurs first.

Parts used to repair a Warrantable Failure may be new Cummins parts, Cummins approved rebuilt parts, or repaired parts. Cummins is not responsible for failures resulting from the use of parts not approved by Cummins.

A new Cummins or Cummins approved rebuilt part used to repair a Warrantable Failure assumes the identity of the part it replaced and is entitled to the remaining coverage hereunder.

**CUMMINS DOES NOT COVER WEAR OR WEAROUT OF COVERED PARTS.**

**CUMMINS IS NOT RESPONSIBLE FOR INCIDENTAL OR CONSEQUENTIAL DAMAGES.**

**THIS WARRANTY AND THE EMISSION WARRANTY SET FORTH HEREINAFTER ARE THE SOLE WARRANTIES MADE BY CUMMINS IN REGARD TO THESE ENGINES. CUMMINS MAKES NO OTHER WARRANTIES, EXPRESS OR IMPLIED, OR OF MERCHANTABILITY OR FITNESS FOR A PARTICULAR PURPOSE.**

This warranty gives you specific legal rights, and you may also have other rights which vary from state to state.

# Emission Warranty

## Products Warranted

This emission warranty applies to new C series Engines marketed by Cummins that are used in the United States* in vehicles designed for transporting persons or property on a street or highway. This warranty applies to Engines delivered to the ultimate purchaser on or after April 1, 1988.

## Coverage

Cummins warrants to the ultimate purchaser and each subsequent purchaser that the Engine is designed, built and equipped so as to conform at the time of sale by Cummins with all U.S. Federal emission regulations applicable at the time of manufacture and that it is free from defects in workmanship or material which would cause it not to meet these regulations within the longer of the following periods: (A) Five years or 100,000 miles (160,935 kilometers) of operation, whichever occurs first, as measured from the date of delivery of the Engine to the ultimate purchaser, or
(B) The Base Engine Warranty.

If the vehicle in which the Engine is installed is registered in the state of California, a separate California Emission Warranty also applies.

## Limitations

Failures, other than those resulting from defects in materials or workmanship, are not covered by this warranty.

Cummins is not responsible for failures or damage resulting from what Cummins determines to be abuse or neglect, including, but not limited to: operation without adequate coolants or lubricants; overfueling; overspeeding; lack of maintenance of lubricating, cooling or intake systems; improper storage, starting, warm-up, run-in or shutdown practices; unauthorized modifications of the Engine. Cummins is also not responsible for failures caused by incorrect oil or fuel or by water, dirt or other contaminants in the fuel or oil.

Cummins is not responsible for non-Engine repairs, "downtime" expenses, cargo damage, fines, all applicable taxes, all business costs or other losses resulting from a Warrantable Failure.

**CUMMINS IS NOT RESPONSIBLE FOR INCIDENTAL OR CONSEQUENTIAL DAMAGES.**

* United States includes American Samoa, the Commonwealth of Northern Mariana Islands, Guam, Puerto Rico, and the U.S. Virgin Islands.

# All Bus Categories Worldwide (Except U.S./Canada Diesel Powered School Buses)

## Coverage

### Products Warranted

This warranty applies to new diesel, LPG, compressed or liquid natural gas fueled engines sold by Cummins and delivered to the first user on or after January 1, 1999, that are used in all bus categories worldwide (except U.S./Canada diesel powered school buses).

### Base Engine Warranty

The Base Engine Warranty covers any failures of the Engine which result, under normal use and service, from a defect in material or factory workmanship (Warrantable Failure). This coverage begins with the sale of the engine by Cummins and continues for two years from the date of delivery of the Engine to the first user.

### Extended Major Components Warranty

The Extended Major Components Warranty applies to all except B and ISB series Engines and covers Warrantable Failures of the engine cylinder block, camshaft, crankshaft, connecting rods and Cummins fan clutch (Covered Parts).

Bushing and bearing failures are not covered.

This coverage begins with the expiration of the Base Engine Warranty and ends three years or 300,000 miles (482,805 kilometers) or 10,800 hours of operation, whichever occurs first, from the date of delivery of the Engine to the first user.

### Emission Warranty

Additional coverage is outlined under the Emission Warranty.

## Consumer Products

This warranty on Consumer Products in the United States is a **LIMITED** warranty. **CUMMINS IS NOT RESPONSIBLE FOR INCIDENTAL OR CONSEQUENTIAL DAMAGES.** Any implied warranties applicable to Consumer Products in the United States terminate concurrently with the expiration of the express warranties applicable to such products. Some states or countries do not allow the exclusion of incidental or consequential damages, or limitations on how long an implied warranty lasts, so the limitations or exclusions herein may not apply to you.

**These warranties are made to all Owners in the chain of distribution and Coverage continues to all subsequent Owners until the end of the periods of Coverage.**

# Cummins Responsibilities

## During The Base Engine Warranty

Cummins will pay for all parts and labor needed to repair the damage to the Engine resulting from a Warrantable Failure.

Cummins will pay for the lubricating oil, antifreeze, filter elements, belts, hoses and other maintenance items that are not reusable due to the Warrantable Failure.

Cummins will pay for reasonable labor costs for Engine removal and reinstallation when necessary to repair a Warrantable Failure.

Cummins will pay reasonable costs for towing a vehicle disabled by a Warrantable Failure to the nearest authorized repair location. In lieu of towing expenses, Cummins will pay reasonable costs for mechanics to travel to and from the location of the vehicle, including meals, mileage, and lodging, when the repair is performed at the site of the failure.

## During The Extended Major Components Warranty

Cummins will pay for the repair or, at its option, replacement of the defective Covered Part and any Covered Part damaged by a Warrantable Failure of the defective Covered Part.

# Owner Responsibilities

## During The Base Engine Warranty

Owner is responsible for the cost of lubricating oil, antifreeze, filter elements and other maintenance items replaced during warranty repairs unless such items are not reusable due to the Warrantable Failure.

## During The Extended Major Components Warranty

Owner is responsible for the cost of all labor needed to repair the Engine, including the labor to remove and reinstall the engine. When Cummins elects to repair a part instead of replacing it, Owner is not responsible for the labor needed to repair the part.

Owner is responsible for the cost of all parts required for the repair except for the defective Covered Part and any Covered Part damaged by a Warrantable Failure of the defective Covered Part.

Owner is responsible for the cost of lubricating oil, antifreeze, filter elements and other maintenance items replaced during the repair.

## During The Base Engine and Extended Major Components Warranties

Owner is responsible for the operation and maintenance of the Engine as specified in the applicable Cummins Operation and Maintenance Manuals. Owner is also responsible for providing proof that all recommended maintenance has been performed.

Before the expiration of the applicable warranty, Owner must notify a Cummins distributor, authorized dealer or other repair location approved by Cummins of any Warrantable Failure and make the Engine available for repair by such facility. Except for Engines disabled by a Warrantable Failure during the Base Engine Warranty, the Owner must also deliver the Engine to the repair facility. Locations in the United States and Canada are listed in the Cummins United States and Canada Sales and Service Directory.

Owner is responsible for communication expenses, meals, lodging and similar costs incurred as a result of a Warrantable Failure.

Owner is responsible for non-Engine repairs and for ''downtime'' expenses, passenger delays, fines, cargo damage, all applicable taxes, all business costs, and other losses resulting from a Warrantable Failure.

## Limitations

Cummins is not responsible for failures or damage resulting from what Cummins determines to be abuse or neglect, including, but not limited to: operation without adequate coolants or lubricants; overfueling; overspeeding; lack of maintenance of lubricating, cooling or intake systems; improper storage, starting, warm-up, run-in or shutdown practices; unauthorized modifications of the Engine. Cummins is also not responsible for failures caused by incorrect oil or fuel or by water, dirt or other contaminants in the fuel or oil.

This warranty does not apply to accessories which bear the name of another company. Such non-warranted accessories include, but are not limited to: alternators, starters, fans, air conditioning compressors, clutches, filters, transmissions, torque converters, vacuum pumps, power steering pumps and air compressors.

Excessive oil consumption for B series engines is covered for the duration of the coverage or 100,000 miles (160,935 kilometers) or 7000 hours from the date of delivery of the Engine to the first user, whichever of the three occurs first. Before a claim for excessive oil consumption will be considered, Owner must submit adequate documentation to show that consumption exceeds Cummins published standards.

Failures of belts and hoses supplied by Cummins are covered for the first year from the date of delivery of the Engine to the first user.

Parts used to repair a Warrantable Failure may be new Cummins parts, Cummins approved rebuilt parts, or repaired parts. Cummins is not responsible for failures resulting from the use of parts not approved by Cummins.

A new Cummins or Cummins approved rebuilt part used to repair a Warrantable Failure assumes the identity of the part it replaced and is entitled to the remaining coverage hereunder.

**CUMMINS DOES NOT COVER WEAR OR WEAROUT OF COVERED PARTS.**

**CUMMINS IS NOT RESPONSIBLE FOR INCIDENTAL OR CONSEQUENTIAL DAMAGES.**

**THESE WARRANTIES AND THE EMISSION WARRANTY SET FORTH HEREINAFTER ARE THE SOLE WARRANTIES MADE BY CUMMINS IN REGARD TO THESE ENGINES. CUMMINS MAKES NO OTHER WARRANTIES, EXPRESS OR IMPLIED, OR OF MERCHANTABILITY OR FITNESS FOR A PARTICULAR PURPOSE.**

This warranty gives you specific legal rights, and you may also have other rights which vary from state to state or country to country.

# Emission Warranty

## Products Warranted

This emission warranty applies to new diesel, LPG, compressed or liquid natural gas fueled engines marketed by Cummins that are used in the United States* in vehicles designed for transporting persons or property on a street or highway. This warranty applies to Engines delivered to the ultimate purchaser on or after January 1, 1999.

## Coverage

Cummins warrants to the ultimate purchaser and each subsequent purchaser that the Engine is designed, built and equipped so as to conform at the time of sale by Cummins with all U.S. Federal emission regulations applicable at the time of manufacture and that it is free from defects in material or factory workmanship which would cause it not to meet these regulations within the longer of the following periods: (A) Five years or 100,000 miles (160,935 kilometers) of operation, whichever occurs first, as measured from the date of delivery of the Engine to the ultimate purchaser, or (B) The Base Engine Warranty.

If the vehicle in which the Engine is installed is registered in the state of California, a separate California Emission Warranty also applies.

## Limitations

Failures, other than those resulting from defects in material or factory workmanship, are not covered by this warranty.

Cummins is not responsible for failures or damage resulting from what Cummins determines to be abuse or neglect, including, but not limited to: operation without adequate coolants or lubricants; overfueling; overspeeding; lack of

maintenance of lubricating, cooling or intake systems; improper storage, starting, warm-up, run-in or shutdown practices; unauthorized modifications of the Engine. Cummins is also not responsible for failures caused by incorrect oil or fuel or by water, dirt or other contaminants in the fuel or oil.

Cummins is not responsible for non-Engine repairs, ''downtime'' expenses, cargo damage, fines, all applicable taxes, all business costs, and other losses resulting from a Warrantable Failure.

**CUMMINS IS NOT RESPONSIBLE FOR INCIDENTAL OR CONSEQUENTIAL DAMAGES.**

* United States includes American Samoa, the Commonwealth of Northern Mariana Islands, Guam, Puerto Rico, and the U.S. Virgin Islands.

# United States and Canada Diesel Engine School Bus

## Coverage

### Products Warranted

This warranty applies to new diesel Engines sold by Cummins Engine Company, Inc., hereafter ''Cummins'', and delivered to the first user on or after September 15, 1996, that are used in school bus* applications in the United States** or Canada.

### Base Engine Warranty

The Base Engine Warranty covers any failures of the Engine which result, under normal use and service, from a defect in material or factory workmanship (Warrantable Failure). This coverage begins with the sale of the Engine by Cummins and continues for five years or 100,000 miles (160,935 kilometers), whichever occurs first, from the date of delivery of the Engine to the first user.

### Extended Major Components Warranty

The Extended Major Components Warranty applies to all except B and ISB series Engines and covers Warrantable Failures of the engine cylinder block, camshaft, crankshaft, connecting rods and Cummins fan clutch (Covered Parts).

Bushing and bearing failures are not covered.

This coverage begins with the expiration of the Base Engine Warranty and ends three years or 300,000 miles (482,805 kilometers), whichever occurs first, from the date of delivery of the Engine to the first user.

### Emission Warranty

Additional coverage is outlined in the Emission Warranty on the back page.

### Consumer Products

This warranty on Consumer Products in the United States is a **LIMITED** warranty. **CUMMINS IS NOT RESPONSIBLE FOR INCIDENTAL OR CONSEQUENTIAL DAMAGES.** Any implied warranties applicable to Consumer Products in the United States terminate concurrently with the expiration of the express warranties applicable to such products. In the United States, some states do not allow the exclusion of incidental or consequential damages, or limitations on how long an implied warranty lasts, so the limitations or exclusions herein may not apply to you.

**THESE WARRANTIES ARE MADE TO ALL OWNERS IN THE CHAIN OF DISTRIBUTION, AND COVERAGE CONTINUES TO ALL SUBSEQUENT OWNERS UNTIL THE END OF THE PERIODS OF COVERAGE.**

## Cummins Responsibilities

### During The Base Engine Warranty

Cummins will pay for all parts and labor needed to repair the damage to the Engine resulting from a Warrantable Failure.

Cummins will pay for the lubricating oil, antifreeze, filter elements, belts, hoses and other maintenance items that are not reusable due to the Warrantable Failure.

Cummins will pay for reasonable labor costs for Engine removal and reinstallation when necessary to repair a Warrantable Failure.

Cummins will pay reasonable costs for towing a vehicle disabled by a Warrantable Failure to the nearest authorized repair location when necessary to make the repair for the first 2 years from the date of delivery of the Engine to the first user. In lieu of towing expenses, Cummins will pay reasonable costs for mechanics to travel to and from the location of the vehicle, including meals, mileage, and lodging, when the repair is performed at the site of the failure.

### During The Extended Major Components Warranty

Cummins will pay for the repair or, at its option, replacement of the defective Covered Part and any Covered Part damaged by a Warrantable Failure of the defective Covered Part.

# Owner Responsibilities

## During The Base Engine Warranty

Owner is responsible for the cost of lubricating oil, antifreeze, filter elements and other maintenance items provided during warranty repairs unless such items are not reusable due to the Warrantable Failure.

## During The Extended Major Components Warranty

Owner is responsible for the cost of all labor needed to repair the Engine, including the labor to remove and reinstall the Engine. When Cummins elects to repair a part instead of replacing it, Owner is not responsible for the labor needed to repair the part.

Owner is responsible for the cost of all parts required for the repair except for the defective Covered Part and any Covered Part damaged by a Warrantable Failure of the defective Covered Part.

Owner is responsible for the cost of lubricating oil, antifreeze, filter elements and other maintenance items replaced during the repair.

## During The Base Engine and Extended Major Components Warranties

Owner is responsible for the operation and maintenance of the Engine as specified in the applicable Cummins Operation and Maintenance Manual. Owner is also responsible for providing proof that all recommended maintenance has been performed.

Before the expiration of the applicable warranty, Owner must notify a Cummins distributor, authorized dealer or other repair location approved by Cummins of any Warrantable Failure and make the Engine available for repair by such facility. Except for Engines disabled by a Warrantable Failure during the first year from the date of delivery of the Engine to the first user, Owner must also deliver the Engine to the repair facility. Locations in the United States and Canada are listed in the Cummins United States and Canada Sales and Service Directory.

Owner is responsible for communication expenses, meals, lodging and similar costs incurred as a result of a Warrantable Failure.

Owner is responsible for non-Engine repairs and for "downtime" expenses, passenger delays, fines, all applicable taxes, all business costs and other losses resulting from a Warrantable Failure.

## Limitations

Cummins is not responsible for failures or damage resulting from what Cummins determines to be abuse or neglect, including but not limited to: operation without adequate coolants or lubricants; overfueling; overspeeding; lack of maintenance of lubricating, cooling or intake systems; improper storage, starting, warm-up, run-in or shutdown practices; unauthorized modifications of the Engine. Cummins is also not responsible for failures caused by incorrect oil or fuel or by water, dirt or other contaminants in the fuel or oil.

This warranty does not apply to accessories which bear the name of another company. This category includes, but is not limited to: alternators, starters, fans, air conditioning compressors, clutches, filters, transmissions, torque converters, vacuum pumps, power steering pumps and air compressors. Cummins branded alternators and starters are covered for the first two years from the date of delivery of the Engine to the first user, or the expiration of the Base Engine Warranty, whichever occurs first.

Excessive oil consumption for B series Engines is covered for the duration of the coverage or 100,000 miles (160,935 kilometers) or 7000 hours from the date of delivery of the Engine to the first user, whichever of the three occurs first. Before a claim for excessive oil consumption will be considered, Owner must submit adequate documentation to show that consumption exceeds Cummins published standards.

Failures of belts and hoses supplied by Cummins are not covered beyond the first year from the date of delivery of the Engine to the first user or the expiration of the applicable Base Warranty, whichever occurs first.

Parts used to repair a Warrantable Failure may be new Cummins parts, Cummins approved rebuilt parts, or repaired parts. Cummins is not responsible for failures resulting from the use of parts not approved by Cummins.

A new Cummins or Cummins approved rebuilt part used to repair a Warrantable Failure assumes the identity of the part it replaced and is entitled to the remaining coverage hereunder.

**CUMMINS DOES NOT COVER WEAR OR WEAROUT OF COVERED PARTS.**

**CUMMINS IS NOT RESPONSIBLE FOR INCIDENTAL OR CONSEQUENTIAL DAMAGES.**

**THESE WARRANTIES AND THE EMISSION WARRANTY SET FORTH HEREINAFTER ARE THE SOLE WARRANTIES MADE BY CUMMINS IN REGARD TO THESE ENGINES. CUMMINS MAKES NO OTHER WARRANTIES, EXPRESS OR IMPLIED, OR OF MERCHANTABILITY OR FITNESS FOR A PARTICULAR PURPOSE.**

This warranty gives you specific legal rights, and you may also have other rights which vary from state to state.

# Emission Warranty

## Products Warranted

This emission warranty applies to new Engines marketed by Cummins that are used in the United States* in vehicles designed for transporting persons or property on a street or highway. This warranty applies to Engines delivered to the ultimate purchaser on or after January 1, 1996.

## Coverage

Cummins warrants to the ultimate purchaser and each subsequent purchaser that the Engine is designed, built and equipped so as to conform at the time of sale by Cummins with all U.S. Federal emission regulations applicable at the time of manufacture and that it is free from defects in material or factory workmanship which would cause it not to meet these regulations within the longer of the following periods: (A) Five years or 100,000 miles (160,935 kilometers) of operation, whichever occurs first, as measured from the date of delivery of the Engine to the ultimate purchaser, or (B) The Base Engine Warranty.

If the vehicle in which the Engine is installed is registered in the state of California, a separate California Emission Warranty also applies.

## Limitations

Failures, other than those resulting from defects in material or factory workmanship, are not covered by this warranty.

Cummins is not responsible for failures or damage resulting from what Cummins determines to be abuse or neglect, including, but not limited to: operation without adequate coolants or lubricants; overfueling; overspeeding; lack of

maintenance of lubricating, cooling or intake systems; improper storage, starting, warm-up, run-in or shutdown practices; unauthorized modifications of the Engine. Cummins is also not responsible for failures caused by incorrect oil or fuel or by water, dirt or other contaminants in the fuel or oil.

Cummins is not responsible for non-Engine repairs, ''downtime'' expenses, cargo damage, fines, all applicable taxes, all business costs or other losses resulting from a Warrantable Failure.

**CUMMINS IS NOT RESPONSIBLE FOR INCIDENTAL OR CONSEQUENTIAL DAMAGES.**

* A vehicle used to transport students to and from school and school-related events. Vehicle must have warning lights and the words ''SCHOOL BUS'' written on the front and rear roof caps.

** Includes American Samoa, the Commonwealth of Northern Mariana Islands, Guam, Puerto Rico, and the U.S. Virgin Islands.

# California Emission Control System Warranty, On-Highway

## Products Warranted

This Emission Control System Warranty applies to heavy duty diesel engines (hereafter, engines) certified with the California Air Resources Board beginning with the year 1991, marketed by Cummins, and registered in California for use in automotive on-highway applications.

## Your Warranty Rights and Obligations

The California Air Resources Board and Cummins Engine Company, Inc., are pleased to explain the emission control system warranty on your 1992 and subsequent model year heavy duty diesel engine. In California, new motor vehicle engines must be designed, built and equipped to meet the State's stringent anti-smog standards. Cummins must warrant the emission control system on your heavy duty diesel engine for the periods of time listed below provided there has been no abuse, neglect or improper maintenance of your heavy duty diesel engine.

Your emission control system may include parts such as the fuel injection system and engine electronic control module. Also included may be hoses, connectors and other emission-related assemblies.

If an emission-related part on your engine is found to have a defect in material or factory workmanship (Warrantable Condition), the part will be repaired or replaced by Cummins. This is your emission control system defects warranty.

## Manufacturer's Warranty Coverage

This warranty coverage is provided for five years or 160,935 km [100,000 miles] or 3,000 hours of engine operation, whichever first occurs from the date of delivery of the engine to the first user.

Where a Warrantable Condition exists, Cummins will repair your engine at no cost to you including diagnosis, parts and labor.

## Owner's Warranty Responsibilities

As the engine owner, you are responsible for the performance of the required maintenance listed in your Cummins Operation and Maintenance Manual. Cummins recommends that you retain all receipts covering maintenance on your engine, but Cummins cannot deny warranty solely for the lack of receipts or for your failure to substantiate the performance of all scheduled maintenance.

You are responsible for presenting your engine to a Cummins dealer as soon as a problem exists. The warranty repairs should be completed in a reasonable amount of time, not to exceed 30 days.

As the engine owner, you should also be aware that Cummins may deny you warranty coverage if your engine or a part has failed due to abuse, neglect, improper maintenance or unapproved modifications.

If you have any questions regarding your warranty rights and responsibilities, you should contact Cummins Customer Relation Department at 1-800-343-7357 or the California Air Resources Board at 9528 Telstar Avenue, El Monte, CA 91731.

A warranted part which is scheduled for replacement as required maintenance is warranted up to the first scheduled replacement point.

Prior to the expiration of the applicable warranty, Owner must give notice of any warranted emission control failure to a Cummins distributor, authorized dealer or other repair location approved by Cummins and deliver the engine to such facility for repair. Repair locations are listed in Cummins United States and Canada Service Directory.

Owner is responsible for incidental costs such as: communication expenses, meals, lodging incurred by Owner or employees of Owner as a result of a Warrantable Condition.

Owner is responsible for "downtime" expenses, cargo damage, fines, all applicable taxes, all business costs, and other losses resulting from a Warrantable Condition.

**CUMMINS IS NOT RESPONSIBLE FOR OTHER INCIDENTAL OR CONSEQUENTIAL DAMAGES. INCIDENTAL OR CONSEQUENTIAL DAMAGES INCLUDE BUT ARE NOT LIMITED TO FINES, THEFT, VANDALISM OR COLLISIONS.**

## Replacement Parts

Cummins recommends that any service parts used for maintenance, repair or replacement of emission control systems be new, genuine Cummins or Cummins approved rebuilt parts and assemblies, and that the engine be serviced by a Cummins distributor, authorized dealer or the repair location approved by Cummins. The owner may elect to have maintenance, replacement or repair of the emission control parts performed by a facility other than a Cummins distributor, an authorized dealer or a repair location approved by Cummins, and may elect to use parts other than new genuine Cummins or Cummins approved rebuilt parts and assemblies for such maintenance, replacement or repair; however, the cost of such service or parts and subsequent failures resulting from such service or parts will not be covered under this emission control system warranty, except for Emergency Repairs as described below.

## Cummins Responsibilities

The warranty coverage begins when the engine is delivered to the ultimate purchaser.

Repairs and service will be performed by any Cummins distributor, authorized dealer or other repair location approved by Cummins using new, genuine Cummins or Cummins approved rebuilt parts and assemblies. Cummins will repair any of the emission control parts found by Cummins to be defective without charge for parts or labor (including diagnosis which results in determination that there has been a failure of a warranted emission control part).

## Emergency Repairs

In the case of an emergency where a Cummins distributor, authorized dealer, or other repair location approved by Cummins is not available, repairs may be performed by any available repair location or by any individual using any replacement parts. A part not being available within 30 days or a repair not being complete within 30 days constitutes an emergency. Cummins will reimburse the Owner for expenses (including diagnosis), not to exceed the manufacturer's suggested retail price for all warranted parts replaced and labor charges based on the manufacturer's recommended time allowance for the warranty repair and the geographically appropriate hourly labor rate. Replaced parts and paid invoices must be presented at a Cummins authorized repair facility as a condition of reimbursement for emergency repairs not performed by a Cummins distributor, authorized dealer, or other repair location approved by Cummins.

## Warranty Limitations

Cummins is not responsible for failures or damage resulting from what Cummins determines to be abuse or neglect, including, but not limited to: operation without adequate coolants or lubricants; overfueling; overspeeding; lack of maintenance of cooling, lubricating or intake systems; improper storage, starting, warm-up, run-in or shutdown practices; unauthorized modifications to the engine. Cummins is also not responsible for failures caused by incorrect oil or fuel or by water, dirt or other contaminants in the fuel or oil.

Cummins is not responsible for failures resulting from improper repair or the use of parts which are not genuine Cummins or Cummins approved parts.

Cummins is not responsible for the material and labor costs of emission control parts and assemblies replaced during Scheduled Maintenance of the engine as specified in Cummins Operation and Maintenance Manuals.

**THIS WARRANTY, TOGETHER WITH THE EXPRESS COMMERCIAL WARRANTIES ARE THE SOLE WARRANTIES MADE BY CUMMINS. THERE ARE NO OTHER WARRANTIES, EXPRESS OR IMPLIED, OR OF MERCHANTABILITY OR FITNESS FOR A PARTICULAR PURPOSE.**

# Moteurs tout terrain Etats-Unis et Canada

## Garantie

### Produits garantis

La présente garantie s'applique aux nouveaux moteurs vendus par Cummins et livrés au premier utilisateur à compter du 1er avril 1999 pour un usage dans des applications industrielles (tout terrain) aux Etats-Unis* et au Canada, à l'exception des moteurs utilisés dans des applications marines et d'entraînement de générateur, ainsi que dans certaines applications militaires, pour lesquelles une couverture de garantie différente est fournie.

### Garantie de base du moteur

La présente garantie couvre toute panne du moteur, dans des conditions normales d'utilisation et d'entretien, provenant d'un défaut de matériau ou de fabrication en usine (pannes couvertes).

La garantie prend effet à dater de la vente du moteur. Elle s'étend sur une période de deux ans ou 2 000 heures d'utilisation, suivant lequel de ces termes intervient en premier, à compter de la date de livraison du moteur au premier utilisateur ou de la date à laquelle le moteur est mis en location de courte ou longue durée ou en prêt pour la première fois, ou encore lorsque le moteur a été utilisé pendant 50 heures, suivant lequel de ces termes intervient en premier. En cas d'une utilisation dépassant 2 000 heures durant la première année, la période de garantie s'étend jusqu'à la fin de la première année.

### Garantie étendue des composants principaux

La Garantie prolongée des principaux éléments couvre les pannes justifiables du bloc-cylindre, de l'arbre à cames, du vilebrequin, des bielles du moteur (pièces couvertes).

Les pannes de bagues et roulement de paliers ne sont pas garanties.

Cette couverture prend effet à la date d'expiration de la garantie de base du moteur et se termine trois ans ou 10 000 heures d'utilisation après la date de livraison du moteur au premier utilisateur ou à compter de la date à laquelle le moteur est mis en location de courte ou longue durée ou en prêt pour la première fois, ou encore lorsque le moteur

a été utilisé pendant 50 heures, suivant lequel de ces termes intervient en premier.

### Produits de consommation

La garantie sur les produits de consommation aux États-Unis est LIMITEE. CUMMINS N'EST PAS RESPONSABLE DES DOMMAGES INDIRECTS OU INDUITS Aux États-Unis, toute garantie implicite applicable aux produits de consommation vient à échéance à l'expiration des garanties expresses applicables au produit. Certains Etats d'Amérique réfutent l'exclusion des détériorations provoquées par des dommages indirects ou induits, ou les limitations de durée de garanties implicites.

Ces garanties s'appliquent à tous les propriétaires du circuit de distribution et la couverture s'applique à tous les propriétaires ultérieurs jusqu'à la fin de la période de couverture.

## Responsabilités Cummins

### Pendant la garantie de base du moteur

Cummins réglera tous les frais des pièces détachées et de la main d'oeuvre nécessaires à la réparation du produit endommagé en raison d'une panne justifiable.

Cummins prend en charge l'huile, l'antigel, les cartouches de filtre ainsi que d'autres pièces ou fournitures d'entretien non réutilisables en raison d'une panne sous garantie.

Cummins paie la majeure partie des frais de déplacement des mécaniciens ce qui comprend les frais de repas, les frais kilométriques et les frais d'hébergement, dans le cas où une réparation doit être effectuée sur les lieux de la panne.

Cummins prend en charge une partie des frais de main d'oeuvre lorsqu'il est nécessaire de déposer et de remonter le moteur lors d'une panne sous garantie.

### Pendant la garantie étendue des principaux composants

Cummins réglera la réparation ou, s'il préfère, le remplacement de la pièce couverte défectueuse et de toute pièce couverte endommagée par une panne justifiable de la pièce couverte défectueuse.

# Responsabilités du propriétaire

## Pendant la garantie de base du moteur

Le propriétaire doit régler l'huile de graissage, l'antigel, les éléments filtrants et les autres articles d'entretien remplacés au cours des réparations effectuées dans le cadre de la garantie à moins que ces articles ne puissent plus être utilisés en raison d'une panne justifiable.

## Pendant la garantie étendue des principaux composants

Le propriétaire est responsable de tous les frais de la main-d'oeuvre nécessaire à la réparation du moteur, y compris les frais de main-d'oeuvre pour démonter et réinstaller le moteur. Lorsque Cummins choisit de réparer une pièce plutôt que de la remplacer, le propriétaire n'est pas responsable de la main-d'oeuvre nécessaire à la réparation de la pièce.

Le propriétaire supporte les frais occasionnés par le remplacement des pièces excepté pour la pièce défectueuse sous garantie et toute pièce garantie dont la détérioration a été provoquée par une panne sous garantie de la pièce défectueuse sous garantie.

Le propriétaire supporte les frais de remplacement de l'huile, de l'antigel, des cartouches de filtre ainsi que des autres pièces ou fournitures lors d'une réparation en raison d'une panne sous garantie.

## PENDANT LA PÉRIODE DE GARANTIE DE BASE DU MOTEUR ET DE GARANTIE ETENDUE DES COMPOSANTS PRINCIPAUX

Le propriétaire est responsable de l'utilisation et de l'entretien du moteur comme il est spécifié dans le manuel d'utilisation et d'entretien Cummins. Le propriétaire doit également pouvoir prouver que tous les travaux d'entretien recommandés ont été effectués.

Avant la date d'expiration de la garantie en vigueur, le propriétaire doit avertir un concessionnaire Cummins, un concessionnaire agréé ou un autre site de réparation homologué, de toute panne sous garantie et pouvoir confier le moteur afin qu'il puisse être réparé. Les sites de réparation aux États-Unis ainsi qu'au Canada sont énumérés dans le répertoire des concessionnaires moteur tout terrain Cummins agréé.

Le propriétaire supporte les frais de communication, de repas, d'hébergement et d'autres ais similaires occasionnés par une panne sous garantie.

Le propriétaire est responsable des réparations autres que celles du moteur, des dépenses de temps mort, des dommages au chargement, des amendes, de toutes les taxes en vigueur, de tous les coûts commerciaux et de toute autre dépense résultant d'une panne sous garantie.

## Limites

Cummins décline toute responsabilité en cas de pannes ou de détériorations résultant de ce que Cummins considère comme un abus ou une négligence de la part du propriétaire, notamment et non limitativement: une utilisation sans les lubrifiants ou les liquides de refroidissement appropriés; surremplissage de carburant; vitesse trop élevée; négligence d'entretien des systèmes d'admission, de refroidissement ou de lubrification; mauvaises conditions d'entreposage, pratiques inappropriées de démarrage, de chauffage, de rodage ou d'arrêt; modifications non homologuées du moteur. Cummins n'est également pas responsable des pannes provoquées par l'utilisation d'une huile, d'un carburant ou d'une eau non appropriés, ainsi que des pannes provoquées par la présence de dépôts dans le carburant ou dans l'huile.

Pour les générateurs de courant et les pompes à incendie (unités conditionnées), cette garantie s'applique aux accessoires, sauf pour les embrayages et filtres fournis par Cummins qui portent le nom d'une autre société.

Mis à part les générateurs de courant et les pompes à incendie, Cummins ne garantit pas les accessoires portant le nom d'une autre société. Ces accessoires comprennent: les alternateurs, les démarreurs, les ventilateurs**, les compresseurs d'air conditionnés, les embrayages, les filtres, les transmissions, les convertisseurs de couple, les pompes d'assistance de direction, les entraînements ventilateurs d'une marque différente de celle de Cummins, les freins de compression moteur et les compresseurs d'air.

Les unités Compusave Cummins sont assujetties à une garantie différente.

Avant qu'une réclamation concernant une consommation excessive en huile soit prise en compte, le propriétaire doit fournir une documentation adéquate afin de pouvoir prouver que la consommation dépasse celle définie par Cummins.

Les détériorations des courroies et flexibles fournis par Cummins ne sont pas garanties au-delà des 500 premières heures ou après un an d'utilisation, suivant lequel de ces termes intervient en premier.

Les pièces utilisées pour la réparation d'une panne sous garantie peuvent être des pièces Cummins neuves, des pièces reconditionnées homologuées ou des pièces réparées. Cummins n'est pas responsable des pannes résultant de l'utilisation de pièces non homologuées.

Une nouvelle pièce Cummins ou une pièce reconditionnée homologuée utilisée pour la réparation d'une panne sous garantie est alors identifiée comme la pièce originale remplacée en vertu de cette garantie.

**CUMMINS NE COUVRE PAS L'USURE DES PIECES COUVERTES.**

**CUMMINS N'EST PAS RESPONSABLE DES DOMMAGES INDIRECTS OU INDUITS**

**LES PRESENTES GARANTIES SONT LES GARANTIES EXCLUSIVES DE CUMMINS CONCERNANT CES MOTEURS. CUMMINS NE CONSENT AUCUNE AUTRE GARANTIE EXPRESSE OU IMPLICITE ET AUCUNE GARANTIE DE BONNE QUALITÉ COMMERCIALE OU D'ADAPTATION A UN USAGE SPÉCIFIQUE.**

Cette garantie vous procure certains droits qui peuvent varier d'un État à l'autre.

## Garantie concernant l'émission de polluants

### Produits garantis

Cette garantie s'applique aux nouveaux moteurs commercialisés par Cummins et utilisés aux États-Unis* sur des véhicules à usage industriel tout-terrain. La présente garantie s'applique aux moteurs livrés à l'acheteur final à compter du 1er avril 1999 pour les moteurs jusqu'à 750 chevaux ou à compter du 1er janvier 2000 pour les moteurs d'au moins 751 chevaux.

### Garantie

Cummins garantit au dernier acheteur et à chaque futur acheteur que le moteur a été conçu, construit et équipé selon les lois américaines en vigueur portant sur la pollution et qu'il ne comporte aucun défaut de fabrication des composants, ce qui engendrerait une non-conformité du moteur pendant les périodes suivantes: (A) cinq ans ou 3 000 heures

d'utilisation, suivant lequel de ces termes intervient en premier, et à dater de la livraison du moteur à l'acquéreur final ou (B) la garantie de base des moteurs.

Si le véhicule muni du moteur Cummins est enregistré dans l'Etat de Californie, une autre garantie du système antipollution s'applique également.

## Limites

Les pannes autres que celles résultant d'un défaut de matériaux ou de main d'oeuvre, ne sont pas garanties.

Cummins décline toute responsabilité en cas de pannes ou de détériorations résultant de ce que Cummins considère comme un abus ou une négligence de la part du propriétaire, notamment et non limitativement: une utilisation sans les lubrifiants ou les liquides de refroidissement appropriés; surremplissage de carburant; vitesse trop élevée; négligence d'entretien des systèmes d'admission, de refroidissement ou de lubrification; mauvaises conditions d'entreposage, pratiques inappropriées de démarrage, de chauffage, de rodage ou d'arrêt; modifications non homologuées du moteur. Cummins n'est également pas responsable des pannes provoquées par l'utilisation d'une huile, d'un carburant ou d'une eau non appropriés, ainsi que des pannes provoquées par la présence de dépôts dans le carburant ou dans l'huile.

Cummins n'est pas responsable des réparations autres que celles du moteur, des dépenses de temps mort, des dommages au chargement, des amendes, de toutes les taxes en vigueur, de tous les coûts commerciaux et de toute autre dépense résultant d'une panne sous garantie.

**CUMMINS N'EST PAS RESPONSABLE DES DOMMAGES INDIRECTS OU INDUITS**

*Doivent être pris en compte l'archipel américain Samoa, le Commonwealth des îles Mariana du nord, les îles Guam, Porto Rico et les îles américaines Vierges.

** Les alternateurs, les démarreurs et les ventilateurs SONT couverts pendant la durée de la garantie de base des moteurs B3.3.

# B5.9 & C8.3 Engines United States and Canada Recreational Vehicle Coverage

## Products Warranted

This warranty applies to new B5.9 and C8.3 series diesel Engines sold by Cummins Engine Company, Inc., hereafter "Cummins", and delivered to the first user on or after March 15, 1998, that are used in recreational vehicle* applications in the United States** or Canada.

## Base Engine Warranty

The Base Engine Warranty covers any failures of the Engine which result, under normal use and service, from a defect in material or factory workmanship (Warrantable Failure). This coverage begins with the sale of the Engine by Cummins and continues for seven years or 150,000 miles (241,400 kilometers), whichever occurs first, from the date of delivery of the Engine to the first user.

## Emission Warranty

Additional coverage is outlined in the Emission Warranty on the back page.

## Consumer Products

This warranty on Consumer Products in the United States is a **LIMITED** warranty. **CUMMINS IS NOT RESPONSIBLE FOR INCIDENTAL OR CONSEQUENTIAL DAMAGES.** Any implied warranties applicable to Consumer Products in the United States terminate concurrently with the expiration of the express warranties applicable to such products. In the United States, some states do not allow the exclusion of incidental or consequential damages, or limitations on how long an implied warranty lasts, so the limitations or exclusions herein may not apply to you.

**These warranties are made to all Owners in the chain of distribution, and Coverage continues to all subsequent Owners until the end of the periods of Coverage.**

# Cummins Responsibilities

## During The Base Engine Warranty

Cummins will pay for all parts and labor needed to repair the damage to the Engine resulting from a Warrantable Failure.

Cummins will pay for the lubricating oil, antifreeze, filter elements, belts, hoses and other maintenance items that are not reusable due to the Warrantable Failure.

Cummins will pay for reasonable labor costs for Engine removal and reinstallation when necessary to repair a Warrantable Failure.

Cummins will pay reasonable costs for towing a vehicle disabled by a Warrantable Failure to the nearest authorized repair location when necessary to make the repair for the first year from the date of delivery of the Engine to the first user. In lieu of towing expenses, Cummins will pay reasonable costs for mechanics to travel to and from the location of the vehicle, including meals, mileage, and lodging, when the repair is performed at the site of the failure.

# Owner Responsibilities

## During The Base Engine Warranty

Owner is responsible for the cost of lubricating oil, antifreeze, filter elements and other maintenance items provided during warranty repairs unless such items are not reusable due to the Warrantable Failure.

Owner is responsible for the operation and maintenance of the Engine as specified in the applicable Cummins Operation and Maintenance Manual. Owner is also responsible for providing proof that all recommended maintenance has been performed.

Before the expiration of the applicable warranty, Owner must notify a Cummins distributor, authorized dealer or other repair location approved by Cummins of any Warrantable Failure and make the Engine available for repair by such facility. Except for Engines disabled by a Warrantable Failure during the first year from the date of delivery of the Engine to the first user, Owner must also deliver the Engine to the repair facility. Locations in the United States and Canada are listed in the Cummins United States and Canada Sales and Service Directory.

Owner is responsible for communication expenses, meals, lodging and similar costs incurred as a result of a Warrantable Failure.

Owner is responsible for non-Engine repairs and for ''downtime'' expenses, passenger delays, fines, all applicable taxes, all business costs and other losses resulting from a Warrantable Failure.

## Limitations

Cummins is not responsible for failures or damage resulting from what Cummins determines to be abuse or neglect, including but not limited to: operation without adequate coolants or lubricants; overfueling; overspeeding; lack of maintenance of lubricating, cooling or intake systems; improper storage, starting, warm-up, run-in or shutdown practices; unauthorized modifications of the Engine. Cummins is also not responsible for failures caused by incorrect oil or fuel or by water, dirt or other contaminants in the fuel or oil.

This warranty does not apply to accessories which bear the name of another company. This category includes, but is not limited to: alternators, starters, fans, air conditioning compressors, clutches, filters, transmissions, torque converters, vacuum pumps, power steering pumps and air compressors. Cummins branded alternators and starters are covered for the first two years from the date of delivery of the Engine to the first user, or the expiration of the Base Engine Warranty, whichever occurs first.

Excessive oil consumption for B series Engines is covered for the duration of the coverage or 150,000 miles (241,400 km) or 10,000 hours from the date of delivery of the Engine to the first user, whichever of the three occurs first. Before a claim for excessive oil consumption will be considered, Owner must submit adequate documentation to show that consumption exceeds Cummins published standards.

Failures of belts and hoses supplied by Cummins are not covered beyond the first 12 months from the date of delivery of the Engine to the first user or the expiration of the applicable Base Warranty, whichever occurs first.

Parts used to repair a Warrantable Failure may be new Cummins parts, Cummins approved rebuilt parts, or repaired parts. Cummins is not responsible for failures resulting from the use of parts not approved by Cummins.

A new Cummins or Cummins approved rebuilt part used to repair a Warrantable Failure assumes the identity of the part it replaced and is entitled to the remaining coverage hereunder.

**CUMMINS DOES NOT COVER WEAR OR WEAROUT OF COVERED PARTS.**

**CUMMINS IS NOT RESPONSIBLE FOR INCIDENTAL OR CONSEQUENTIAL DAMAGES.**

**THESE WARRANTIES AND THE EMISSION WARRANTY SET FORTH HEREINAFTER ARE THE SOLE WARRANTIES MADE BY CUMMINS IN REGARD TO THESE ENGINES. CUMMINS MAKES NO OTHER WARRANTIES, EXPRESS OR IMPLIED, OR OF MERCHANTABILITY OR FITNESS FOR A PARTICULAR PURPOSE.**

This warranty gives you specific legal rights, and you may also have other rights which vary from state to state.

# Emission Warranty

## Products Warranted

This emission warranty applies to new Engines marketed by Cummins that are used in the United States* in vehicles designed for transporting persons or property on a street or highway. This warranty applies to Engines delivered to the ultimate purchaser on or after January 1, 1998.

## Coverage

Cummins warrants to the ultimate purchaser and each subsequent purchaser that the Engine is designed, built and equipped so as to conform at the time of sale by Cummins with all U.S. Federal emission regulations applicable at the time of manufacture and that it is free from defects in material or factory workmanship which would cause it not to meet these regulations within the longer of the following periods: (A) Five years or 100,000 miles (160,935 kilometers) of operation, whichever occurs first, as measured from the date of delivery of the Engine to the ultimate purchaser, or (B) The Base Engine Warranty.

If the vehicle in which the Engine is installed is registered in the state of California, a separate California Emission Warranty also applies.

## Limitations

Failures, other than those resulting from defects in material or factory workmanship, are not covered by this warranty.

Cummins is not responsible for failures or damage resulting from what Cummins determines to be abuse or neglect, including, but not limited to: operation without adequate coolants or lubricants; overfueling; overspeeding; lack of maintenance of lubricating, cooling or intake systems; improper storage, starting, warm-up, run-in or shutdown practices; unauthorized modifications of the Engine. Cummins is also not responsible for failures caused by incorrect oil or fuel or by water, dirt or other contaminants in the fuel or oil.

Cummins is not responsible for non-Engine repairs, ''downtime'' expenses, cargo damage, fines, all applicable taxes, all business costs or other losses resulting from a Warrantable Failure.

**CUMMINS IS NOT RESPONSIBLE FOR INCIDENTAL OR CONSEQUENTIAL DAMAGES.**

* A 'recreational vehicle' for this warranty is defined as a Class A Motorhome which is a vehicular unit built on a self-propelled motor vehicle chassis, primarily designed or altered to provide temporary living quarters for recreational, travel or camping use. The living unit has been entirely constructed on a bare, specially-designed motor vehicle chassis.

** Includes American Samoa, the Commonwealth of Northern Mariana Islands, Guam, Puerto Rico, and the U.S. Virgin Islands.

# Off-Highway Engines United States and Canada

## Coverage

### Products Warranted

This warranty applies to new Engines sold by Cummins and delivered to the first user on or after April 1, 1999, that are used in industrial (off-highway) applications in the United States* and Canada, except for Engines used in marine, generator drive and certain defense applications, for which different warranty coverage is provided.

### Base Engine Warranty

This warranty covers any failures of the Engine, under normal use and service, which result from a defect in material or factory workmanship (Warrantable Failures).

Coverage begins with the sale of the Engine by Cummins. Coverage continues for two years or 2,000 hours of operation, whichever occurs first, from the date of delivery of the Engine to the first user, or from the date the unit is first leased, rented or loaned, or when the Engine has been operated for 50 hours, whichever occurs first. If the 2,000 hour limit is exceeded during the first year, Coverage continues until the end of the first year.

### Extended Major Components Warranty

The Extended Major Components Warranty covers Warrantable Failures of the Engine cylinder block, camshaft, crankshaft and connecting rods (Covered Parts).

Bushing and bearing failures are not covered.

This Coverage begins with the expiration of the Base Engine Warranty and ends three years or 10,000 hours of operation from the date of delivery of the Engine to the first user, or from the date the unit is first leased, rented or loaned, or from when the Engine has been operated for 50 hours, whichever occurs first.

## Consumer Products

The warranty on Consumer Products in the United States is a LIMITED warranty. **CUMMINS IS NOT RESPONSIBLE FOR INCIDENTAL OR CONSEQUENTIAL DAMAGES.** Any implied warranties applicable to Consumer Products in the United States terminate concurrently with the expiration of the express warranties applicable to the product. In the United States, some states do not allow the exclusion of incidental or consequential damages, or limitations on how long an implied warranty lasts, so the limitations or exclusions herein may not apply to you.

**These warranties are made to all Owners in the chain of distribution, and Coverage continues to all subsequent Owners until the end of the periods of Coverage.**

# Cummins' Responsibilities

## During The Base Engine Warranty

Cummins will pay for all parts and labor needed to repair the damage to the Engine resulting from a Warrantable Failure.

Cummins will pay for the lubricating oil, antifreeze, filter elements, and other maintenance items that are not reusable due to the Warrantable Failure.

Cummins will pay reasonable costs for mechanics to travel to and from the equipment site, including meals, mileage and lodging, when the repair is performed at the site of the failure.

Cummins will pay reasonable labor costs for Engine removal and reinstallation when necessary to repair a Warrantable Failure.

## During The Extended Major Components Warranty

Cummins will pay for the repair or, at its option, replacement of the defective Covered Part and any Covered Part damaged by a Warrantable Failure of the defective Covered part.

# Owner's Responsibilities

## During The Base Engine Warranty

Owner is responsible for the cost of lubricating oil, antifreeze, filter elements and other maintenance items provided during warranty repairs unless such items are not reusable due to the Warrantable Failure.

## During The Extended Major Components Warranty

Owner is responsible for the cost of all labor needed to repair the Engine, including the labor to remove and reinstall the Engine. When Cummins elects to repair a part instead of replacing it, Owner is not responsible for the labor needed to repair the part.

Owner is responsible for the cost of all parts required for the repair except for the defective Covered Part and any Covered Part damaged by a Warrantable Failure of the defective Covered Part.

Owner is responsible for the cost of lubricating oil, antifreeze, filter elements and other maintenance items replaced during repair of a Warrantable Failure.

## During The Base Engine and Extended Major Components Warranties

Owner is responsible for the operation and maintenance of the Engine as specified in the applicable Cummins Operation and Maintenance Manual. Owner is also responsible for providing proof that all recommended maintenance has been performed.

Before the expiration of the applicable warranty, Owner must notify a Cummins distributor, authorized dealer or other repair location approved by Cummins of any Warrantable Failure and make the Engine available for repair by such facility. Locations in the United States and Canada are listed in the Cummins Off Highway Authorized Dealer Directory.

Owner is responsible for communication expenses, meals, lodging and similar costs incurred as a result of a Warrantable Failure.

Owner is responsible for non-Engine repairs, ''downtime'' expenses, cargo damage, fines, all applicable taxes, all business costs and other losses resulting from a Warrantable Failure.

## Limitations

Cummins is not responsible for failures or damage resulting from what Cummins determines to be abuse or neglect, including, but not limited to: operation without adequate coolants or lubricants; overfueling; overspeeding; lack of maintenance of lubricating, cooling or intake systems; improper storage, starting, warm-up, run-in or shutdown practices; unauthorized modifications of the Engine. Cummins is also not responsible for failures caused by incorrect oil or fuel or by water, dirt or other contaminants in the fuel or oil.

For power units and fire pumps (package units), this warranty applies to accessories, except for clutches and filters, supplied by Cummins which bear the name of another company.

Except for power units and fire pumps, this warranty does not apply to accessories which bear the name of another company. Such non-warranted accessories include, but are not limited to: alternators, starters, fans**, air conditioning compressors, clutches, filters, transmissions, torque converters, steering pumps, and non-Cummins fan drives, engine compression brakes and air compressors.

Cummins Compusave units are covered by a separate warranty.

Before a claim for excessive oil consumption will be considered, Owner must submit adequate documentation to show that consumption exceeds Cummins published standards.

Failures of belts and hoses supplied by Cummins are not covered beyond the first 500 hours or one year of operation, whichever occurs first.

Parts used to repair a Warrantable Failure may be new Cummins parts, Cummins-approved rebuilt parts, or repaired parts. Cummins is not responsible for failures resulting from the use of parts not approved by Cummins.

A new Cummins or Cummins-approved rebuilt part used to repair a Warrantable Failure assumes the identity of the part it replaced and is entitled to the remaining coverage hereunder.

**CUMMINS DOES NOT COVER WEAR OR WEAROUT OF COVERED PARTS.**

**CUMMINS IS NOT RESPONSIBLE FOR INCIDENTAL OR CONSEQUENTIAL DAMAGES.**

**THESE WARRANTIES SET FORTH HEREIN ARE THE SOLE WARRANTIES MADE BY CUMMINS IN REGARD TO THESE ENGINES. CUMMINS MAKES NO OTHER WARRANTIES, EXPRESS OR IMPLIED, OR OF MERCHANTABILITY OR FITNESS FOR A PARTICULAR PURPOSE.**

This warranty gives you specific legal rights, and you may also have other rights which vary from state to state.

# Emission Warranty

## Products Warranted

This emission warranty applies to new Engines marketed by Cummins that are used in the United States* in vehicles designed for Industrial off-highway use. This warranty applies to Engines delivered to the ultimate purchaser on or after April 1, 1999 for engines up to 750 horsepower, on or after January 1, 2000 for engines 751 horsepower and over.

## Coverage

Cummins warrants to the ultimate purchaser and each subsequent purchaser that the Engine is designed, built and equipped so as to conform at the time of sale by Cummins with all U.S. Federal emission regulations applicable at the time of manufacture and that it is free from defects in workmanship or material which would cause it not to meet these regulations within the longer of the following periods: (A) Five years or 3,000 hours of operation, whichever occurs first, as measured from the date of delivery of the Engine to the ultimate purchaser, or (B) The Base Engine Warranty.

If the vehicle in which the Engine is installed is registered in the state of California, a separate California Emission Warranty also applies.

## Limitations

Failures, other than those resulting from defects in materials, or workmanship, are not covered by this warranty.

Cummins is not responsible for failures or damage resulting from what Cummins determines to be abuse or neglect, including, but not limited to: operation without adequate coolant or lubricants; overfueling; overspeeding; lack of maintenance of lubricating, cooling or intake systems; improper storage, starting, warm-up, run-in or shutdown practices; unauthorized modifications of the Engine. Cummins is also not responsible for failures caused by incorrect

fuel or by water, dirt or other contaminants in the fuel.

Cummins is not responsible for non-Engine repairs, ''downtime'' expenses, cargo damage, fines, all business costs or other losses resulting from a Warrantable Failure.

**CUMMINS IS NOT RESPONSIBLE FOR INCIDENTAL OR CONSEQUENTIAL DAMAGES.**

* Includes American Samoa, the Commonwealth of Northern Mariana Islands, Guam, Puerto Rico, and the U.S. Virgin Islands.

** Alternators, starters, and fans ARE covered for the duration of the base engine warranty on B3.3 engines.

# Off-Highway Engines International

## Coverage

### PRODUCTS WARRANTED

This warranty applies to new Engines sold by Cummins and delivered to the first user on or after April 1, 1999, that are used in industrial (off-highway) applications anywhere in the world where Cummins-approved service is available, except the United States* and Canada. Different warranty coverage is provided for Engines used in marine, generator drive and certain defense applications.

### BASE ENGINE WARRANTY

This warranty covers any failures of the Engine, under normal use and service, which result from a defect in material or factory workmanship (Warrantable Failure).

Coverage begins with the sale of the Engine by Cummins. Coverage continues for two years or 2,000 hours of operation, whichever occurs first, from the date of delivery of the Engine to the first user, or from the date the unit is first leased, rented or loaned, or when the Engine has been operated for 50 hours, whichever occurs first. If the 2,000 hour limit is exceeded during the first year, coverage continues until the end of the first year.

### EXTENDED MAJOR COMPONENTS WARRANTY

The Extended Major Components Warranty covers Warrantable Failures of the Engine cylinder block, camshaft, crankshaft and connecting rods (Covered Parts).

Bushing and bearing failures are not covered.

This coverage begins with the expiration of the Base Engine Warranty and ends three years or 10,000 hours of operation, from the date of delivery of the Engine to the first user, or from the date the unit is first leased, rented or loaned, or from when the Engine has been operated for 50 hours, whichever occurs first.

**These warranties are made to all Owners in the chain of distribution, and Coverage continues to all subsequent Owners until the end of the periods of Coverage.**

# Cummins' Responsibilities

## DURING THE BASE ENGINE WARRANTY

Cummins will pay for all parts and labor needed to repair the damage to the Engine resulting from a Warrantable Failure.

Cummins will pay for the lubricating oil, antifreeze, filter elements, and other maintenance items that are not reusable due to a Warrantable Failure.

Cummins will pay reasonable costs for mechanics to travel to and from the equipment site, including meals, mileage and lodging, when the repair is performed at the site of the failure.

Cummins will pay reasonable labor costs for Engine removal and reinstallation when necessary to repair a Warrantable Failure.

## DURING THE EXTENDED MAJOR COMPONENTS WARRANTY

Cummins will pay for the repair or, at its option, replacement of the defective Covered Part and any Covered Part damaged by a Warrantable Failure of the defective Covered part.

# Owner's Responsibilities

## DURING THE BASE ENGINE WARRANTY

Owner is responsible for the cost of lubricating oil, antifreeze, filter elements and other maintenance items replaced during warranty repairs unless such items are not reusable due to the Warrantable Failure.

## DURING THE EXTENDED MAJOR COMPONENTS WARRANTY

Owner is responsible for the cost of all labor needed to repair the Engine, including the labor to remove and reinstall the Engine. When Cummins elects to repair a part instead of replacing it, Owner is not responsible for the labor needed to repair the part.

Owner is responsible for the cost of all parts required for the repair except for the defective Covered Part and any Covered Part damaged by a Warrantable Failure of the defective Covered Part.

Owner is responsible for the cost of lubricating oil, antifreeze, filter elements and other maintenance items replaced during repair of a Warrantable Failure.

## DURING THE BASE ENGINE AND EXTENDED MAJOR COMPONENTS WARRANTIES

Owner is responsible for the operation and maintenance of the Engine as specified in the applicable Cummins Operation and Maintenance Manual. Owner is also responsible for providing proof that all recommended maintenance has been performed.

Before the expiration of the applicable warranty, Owner must notify a Cummins distributor, authorized dealer or other repair location approved by Cummins of any Warrantable Failure and make the product available for repair by such facility. Locations are listed in the Cummins International Sales and Service Directory.

Owner is responsible for communication expenses, meals, lodging and similar costs incurred as a result of a Warrantable Failure.

Owner is responsible for non-Engine repairs, ''downtime'' expenses, cargo damage, fines, all applicable taxes, all business costs and other losses resulting from a Warrantable Failure.

## Limitations

Cummins is not responsible for failures or damage resulting from what Cummins determines to be abuse or neglect, including, but not limited to: operation without adequate coolants or lubricants; overfueling; overspeeding; lack of maintenance of lubricating, cooling or intake systems; improper storage, starting, warm-up, run-in or shutdown practices; unauthorized modifications of the Engine. Cummins is also not responsible for failures caused by incorrect oil or fuel or by water, dirt or other contaminants in the fuel or oil.

For power units and fire pumps (package units) the warranty applies to accessories, except for clutches and filters supplied by Cummins which bear the name of another company.

Starters, alternators, power steering pumps and non-Cummins air compressors supplied by Cummins on B or C Series Engines that are not supplied as part of a package unit are covered for six months* from the date of delivery of the Engine to the first user, or the date the Engine is first leased, rented or loaned, or from when the Engine has been operated for 50 hours, whichever occurs first.

Except for the accessories noted previously, Cummins does not warrant accessories which bear the name of another company. Such non-warranted accessories include, but are not limited to: alternators, starters, fans*, air conditioning compressors, clutches, filters, transmissions, torque converters, steering pumps, non-Cummins fan drives, and air cleaners.

Cummins Compusave units are covered by a separate warranty.

Before a claim for excessive oil consumption will be considered, Owner must submit adequate documentation to show that consumption exceeds Cummins published standards.

Failures of belts and hoses supplied by Cummins are not covered beyond the first 500 hours or one year of operation, whichever occurs first.

Parts used to repair a Warrantable Failure may be new Cummins parts, Cummins-approved rebuilt parts, or repaired parts. Cummins is not responsible for failures resulting from the use of parts not approved by Cummins.

A new Cummins or Cummins-approved rebuilt part used to repair a Warrantable Failure assumes the identity of the part it replaced and is entitled to the remaining coverage hereunder.

**CUMMINS DOES NOT COVER WEAR OR WEAROUT OF COVERED PARTS.**

**CUMMINS IS NOT RESPONSIBLE FOR INCIDENTAL OR CONSEQUENTIAL DAMAGES.**

**THESE WARRANTIES SET FORTH HEREIN ARE THE SOLE WARRANTIES MADE BY CUMMINS IN REGARD TO THESE ENGINES. CUMMINS MAKES NO OTHER WARRANTIES, EXPRESS OR IMPLIED, OR OF MERCHANTABILITY OR FITNESS FOR A PARTICULAR PURPOSE.**

In case of consumer sales, in some countries, the Owner has statutory rights which cannot be affected or limited by the terms of this warranty.

Nothing in this warranty excludes or restricts any contractual rights the Owner may have against third parties.

* Alternators, starters, and fans ARE covered for the duration of the base engine warranty on B3.3 engines.

# C Series Engines Australia and New Zealand Automotive

## Coverage

### Products Warranted

This warranty applies to new C series engines sold by Cummins and delivered to the first user on or after June 1, 1989, that are used in automotive on-highway applications in Australia and New Zealand, except for Engines used in bus and coach applications for which different warranty coverage is provided.

### Base Engine Warranty

This warranty covers any failures of the Engine which result, under normal use and service, from a defect in material or factory workmanship (Warrantable Failure). This coverage begins with the sale of the Engine by Cummins and continues for two years, 100,000 miles (160,935 kilometers) or 3,600 hours of operation, whichever occurs first, from the date of delivery of the Engine to the first user.

## Cummins Responsibilities

Cummins will pay for all parts and labor needed to repair the damage to the Engine resulting from a Warrantable Failure.

Cummins will pay for the lubricating oil, antifreeze, filter elements, belts, hoses and other maintenance items that are not reusable due to a Warrantable Failure.

Cummins will pay for reasonable labor costs for Engine removal and reinstallation when necessary to repair a Warrantable Failure.

Cummins will pay reasonable costs for towing a vehicle disabled by a Warrantable Failure to the nearest authorized repair location. In lieu of towing expenses, Cummins will pay reasonable costs for mechanics to travel to and from the location of the vehicle, including meals, mileage and lodging, when the repair is performed at the site of the failure.

## Owner Responsibilities

Owner is responsible for the operation and maintenance of the Engine as specified in the applicable Cummins Operations and Maintenance Manual. Owner is also responsible for providing proof that all recommended maintenance has been performed.

Before the expiration of the applicable warranty, Owner must notify a Cummins distributor, authorized dealer or other repair location approved by Cummins of any Warrantable Failure and make the Engine available for repair by such facility. Except for Engines disabled by Warrantable Failures, Owner must also deliver the Engine to the repair facility. Locations are listed in the Cummins International Sales and Service Directory.

Owner is responsible for the cost of lubricating oil, antifreeze, filter elements and other maintenance items provided during warranty repairs unless such items are not reusable due to a Warrantable Failure.

Owner is responsible for communication expenses, meals, lodging and similar costs incurred as a result of a Warrantable Failure.

Owner is responsible for non-Engine repairs, ''downtime'' expenses, cargo damage, passenger delays, fines, all applicable taxes, all business costs and other losses resulting from a Warrantable Failure.

## Limitations

Cummins is not responsible for failures or damage resulting from what Cummins determines to be abuse or neglect, including, but not limited to: operation without adequate coolants or lubricants; overfueling; overspeeding; lack of maintenance of lubricating, cooling or intake systems; improper storage, starting, warm-up, run-in or shutdown practices; unauthorized modifications of the Engine. Cummins is also not responsible for failures caused by incorrect oil or fuel or by water, dirt or other contaminants in the fuel or oil.

Starters, alternators, non-Cummins air compressors, power steering pumps and vacuum pumps are covered for six months or 50,000 miles (80,468 kilometers) of operation, whichever occurs first, from the date of delivery of the Engine to the first user. Non-Cummins fuel pumps are covered for the duration of the Base Engine Warranty period.

Except for the accessories noted previously, Cummins does not warrant accessories which bear the name of another company. Such non-warranted accessories include, but are not limited to: fans, air conditioning compressors, clutches, filters, transmissions, torque converters, steering pumps, non-Cummins fan drives, and air cleaners.

Before a claim for excessive oil consumption will be considered, Owner must submit adequate documentation to show that consumption exceeds Cummins published standards.

Failures of belts supplied by Cummins are not covered beyond the first 15,000 miles (24,140 kilometer) or two years of operation, whichever occurs first.

Parts used to repair a Warrantable Failure may be new Cummins parts, Cummins approved rebuilt parts, or repaired parts. Cummins is not responsible for failures resulting from the use of parts not approved by Cummins.

A new Cummins or Cummins approved rebuilt part used to repair a Warrantable Failure assumes the identity of the part it replaced and is entitled to the remaining coverage hereunder.

**CUMMINS DOES NOT COVER WEAR OR WEAROUT OF COVERED PARTS.**

**CUMMINS IS NOT RESPONSIBLE FOR INCIDENTAL OR CONSEQUENTIAL DAMAGES.**

**THIS WARRANTY IS THE SOLE WARRANTY MADE BY CUMMINS IN REGARD TO THESE ENGINES. CUMMINS MAKES NO OTHER WARRANTIES, EXPRESS OR IMPLIED, OR OF MERCHANTABILITY OR FITNESS FOR A PARTICULAR PURPOSE.**

**About the Manual** ..... i-2
General Information ..... i-2
**Acronyms and Abbreviations** ..... i-8
General Information ..... i-8
**Additional Service Literature** ..... L-1
General Information ..... L-1
**Adjustment, Repair and Replacement - Overview** ..... A-1
General Information ..... A-1
**Aftercooler** ..... A-68
Clean ..... A-70
Fill ..... A-71
Install ..... A-70
Preparatory ..... A-68
Remove ..... A-69
**Air Cleaner Restriction** ..... 4-11
Maintenance Check ..... 4-11
**Air Compressor** ..... 7-9
Inspect ..... 7-9
**Air Connection Pipe (Turbocharger to Turbocharger)** ..... A-66
Clean ..... A-67
Install ..... A-67
Preparatory ..... A-66
Remove ..... A-66
Vent ..... A-68
**Air Intake Manifold** ..... A-73
Pressure Test ..... A-73
Temperature Differential Test ..... A-73
**Air Intake Piping** ..... 4-7
Inspect for Reuse ..... 4-7
Install ..... A-65
Remove ..... A-65
**Air Intake System - Overview** ..... A-64
General Information ..... A-64
**All Bus Categories Worldwide (Except U.S./Canada Diesel Powered School Buses)** ..... W-6
**Alternator** ..... A-99
Install ..... A-100
Remove ..... A-99
**Arctic Operation** ..... V-14
Preparatory ..... V-14
**B5.9 & C8.3 Engines United States and Canada Recreational Vehicle** ..... W-28
**Belt Tensioner, Automatic** ..... A-4
Install ..... A-5
Preparatory ..... A-4
Remove ..... A-4
**C Engines United States and Canada Automotive** ..... W-1
**C Series Engines Australia and New Zealand Automotive** ..... W-44
**California Emission Control System Warranty, On-Highway** ..... W-18
**Capscrew Markings and Torque Values** ..... V-23
Capscrew Markings and Torque Values - Metric ..... V-24
Capscrew Markings and Torque Values - U.S. Customary ..... V-25
General Information ..... V-23
**Charge-Air Cooler (CAC)** ..... 4-7
Clean ..... 4-8
Inspect for Reuse ..... 4-7
Leak Test ..... A-72
Pressure Test ..... A-72
**Cold Weather Operation** ..... 1-11
Operating Aids ..... 1-11
Shutters ..... 1-12
Winterfronts ..... 1-12
**Cold Weather Starting Aids** ..... 1-13
Grid Heater ..... 1-16
With Flame Start System ..... 1-15
With Mechanical or Electrical Metering Equipment (Ether) ..... 1-13
**Component Manufacturers' Addresses** ..... M-1
Air Compressors ..... M-1
Air Cylinders ..... M-1
Air Heaters ..... M-1

## Index
## Page X-2


Air Starting Motors ..... M-1
Alternators ..... M-2
Auxiliary Brakes ..... M-2
Belts ..... M-2
Catalytic Converters ..... M-3
Clutches ..... M-3
Coolant Heaters ..... M-3
Coolant Level Switches ..... M-3
Drive Plates ..... M-3
Electric Starting Motors ..... M-3
Electronic Switches ..... M-4
Engine Protection Controls ..... M-4
Fan Clutches ..... M-4
Fans ..... M-4
Fault Lamps ..... M-4
Filters ..... M-5
Flexplates ..... M-5
Fuel Coolers ..... M-5
Fuel Pumps ..... M-5
Fuel Warmers ..... M-5
Gauges ..... M-5
General Information ..... M-1
Governors ..... M-6
Heat Sleeves ..... M-6
Hydraulic and Power Steering Pumps ..... M-6
In-Line Connectors ..... M-6
Oil Heaters ..... M-7
Prelubrication Systems ..... M-7
Radiators ..... M-7
Throttle Assemblies ..... M-7
Torque Converters ..... M-7
**Coolant Filter** ..... 5-9
Install ..... 5-10
Remove ..... 5-9
**Coolant Level** ..... 3-4
Maintenance Check ..... 3-4
**Coolant Recommendations and Specifications** ..... V-15
Preparatory ..... V-15
**Coolant Thermostat** ..... A-14
Inspect for Reuse ..... A-18
Install ..... A-20
Preparatory ..... A-14
Remove ..... A-15
**Cooling System** ..... 7-2
Drain ..... 7-2
Fill ..... 7-6
Flush ..... 7-3
General Information ..... A-2
**Cooling System - Overview** ..... 5-7
Coolant Blending and Mixing ..... 5-7
Fleetguard® Nelson® DCA4 Service Filters and Liquid Precharge ..... 5-8
**Daily Maintenance Procedures - Overview** ..... 3-1
General Information ..... 3-1
**Drive Belt, Cooling Fan** ..... A-3
Install ..... A-3
Remove ..... A-3
**Drive Belts** ..... 3-6
Maintenance Check ..... 3-6
Test ..... 6-9
**Electrical Equipment - Overview** ..... A-96
General Information ..... A-96
**Engine Component Torque Values** ..... V-17
General Information ..... V-17
**Engine Diagrams** ..... E-11
Engine Views ..... E-11
**Engine Identification** ..... E-1
Cummins Engine Nomenclature ..... E-3
Engine Dataplate ..... E-1
Fuel Injection Pump Dataplate ..... E-4
**Engine Operating Range** ..... 1-17
General Information ..... 1-17

**Engine Shutdown** ..... 1-22
General Information ..... 1-22
**Exhaust Manifold, Dry** ..... A-83
Clean ..... A-84
Install ..... A-84
Preparatory ..... A-83
Remove ..... A-83
**Fan, Cooling** ..... 3-7
Maintenance Check ..... 3-7
**Fan Spacer and Pulley** ..... A-5
Install ..... A-6
Preparatory ..... A-5
Remove ..... A-6
**Flow Diagram, Air Intake System** ..... D-20
General Information ..... D-20
**Flow Diagram, Compressed Air System** ..... D-24
General Information ..... D-24
**Flow Diagram, Cooling System** ..... D-12
General Information ..... D-12
**Flow Diagram, Exhaust System** ..... D-22
General Information ..... D-22
**Flow Diagram, Fuel System** ..... D-2
General Information ..... D-2
**Flow Diagram, Lubricating Oil System** ..... D-4
General Information ..... D-4
**Fuel Filter Adapter** ..... A-28
Install ..... A-29
Preparatory ..... A-28
Remove ..... A-28
**Fuel Filter (Spin-On Type)** ..... 5-2
Clean ..... 5-2
Install ..... 5-3
Remove ..... 5-2
**Fuel Injection Pumps, In-Line** ..... 1-8
General Information ..... 1-8
Install ..... A-51
Preparatory ..... A-46
Remove ..... A-49
**Fuel Lift Pump** ..... A-29
Clean ..... A-31
Install ..... A-31
Preparatory ..... A-29
Remove ..... A-30
**Fuel Lines, Low Pressure** ..... A-26
Install ..... A-27
Preparatory ..... A-26
Remove ..... A-27
Vent ..... 5-5
**Fuel Manifold (Drain)** ..... A-36
Install ..... A-37
Preparatory ..... A-36
Remove ..... A-36
**Fuel Pump** ..... A-61
Adjust ..... A-61
**Fuel Recommendations and Specifications** ..... V-8
Fuel Recommendations ..... V-8
**Fuel Shutoff Valve** ..... A-43
Install ..... A-44
Preparatory ..... A-43
Remove ..... A-44
**Fuel Supply Lines** ..... 5-4
Vent ..... 5-4
**Fuel System - Overview** ..... A-25
General Information ..... A-25
**Fuel-Water Separator** ..... 3-2
Maintenance Check ..... 3-2
**General Safety Instructions** ..... i-6
Important Safety Notice ..... i-6
**How to Use the Manual** ..... i-3
General Information ..... i-3
**Illustrations** ..... i-5
General Information ..... i-5

## Index
## Page X-4


**Injector** ..... A-37
Clean ..... A-40
Install ..... A-41
Preparatory ..... A-37
Remove ..... A-39
**Injector Supply Lines (High Pressure)** ..... A-32
Install ..... A-34
Preparatory ..... A-32
Remove ..... A-32
Vent ..... 5-6
**Lubricating Oil and Filters** ..... 4-1
Drain ..... 4-1
Fill ..... 4-5
Install ..... 4-3
Remove ..... 4-3
**Lubricating Oil Cooler** ..... A-89
Clean ..... A-89
Fill ..... A-93
Install ..... A-92
Preparatory ..... A-89
Pressure Test ..... A-91
Remove ..... A-90
**Lubricating Oil Level** ..... 3-3
Maintenance Check ..... 3-3
**Lubricating Oil Pressure Regulator (Main Rifle)** ..... A-87
Clean ..... A-88
Install ..... A-88
Preparatory ..... A-87
Remove ..... A-87
**Lubricating Oil Recommendations and Specifications** ..... V-10
Engine Dataplate ..... V-13
General Information ..... V-10
New Engine Break-in Oils ..... V-12
**Lubricating Oil System - Overview** ..... A-86
General Information ..... A-86
**Lubricating Oil Thermostat** ..... A-94
Clean ..... A-95
Install ..... A-95
Preparatory ..... A-94
Remove ..... A-94
**Maintenance Guidelines - Overview** ..... 2-1
General Information ..... 2-1
**Maintenance Procedures - Overview** ..... 4-1
General Information ..... 4-1
**Maintenance Record Form** ..... 2-10
Maintenance Data ..... 2-10
**Maintenance Schedule** ..... 2-3
General Information ..... 2-3
**Moteurs tout terrain Etats-Unis et Canada** ..... W-22
**Normal Starting Procedure** ..... 1-3
General Information ..... 1-3
**Off-Highway Engines International** ..... W-39
**Off-Highway Engines United States and Canada** ..... W-33
**Operating Instructions - Overview** ..... 1-1
General Information ..... 1-1
**Operating the Engine** ..... 1-20
General Information ..... 1-20
**Overhead Set** ..... 6-2
Adjust ..... 6-2
**Page References for Maintenance Instructions** ..... 2-8
General Information ..... 2-8
**Service Assistance** ..... S-1
Distributors and Branches - Australia ..... S-22
Distributors and Branches - Canada ..... S-19
Distributors and Branches - New Zealand ..... S-25
Distributors and Branches - United States ..... S-4
Division and Regional Offices ..... S-3
Emergency and Technical Service ..... S-1
Problem Solving ..... S-2
Routine Service and Parts ..... S-1
**Service Literature Ordering Location** ..... L-2
Contact Information ..... L-2

**Specifications** ..... V-1
Air Intake System ..... V-5 , E-9
Batteries (Specific Gravity) ..... V-7 , E-10
Cooling System ..... V-4 , E-8
Electrical System ..... V-6 , E-10
Fuel System ..... V-6
General Specifications ..... V-1 , E-5
Lubricating Oil System ..... V-2 , E-6
**Starting Motor** ..... A-97
Install ..... A-98
Remove ..... A-97
**Starting Procedure After Extended Shutdown or Oil Change** ..... 1-19
General Information ..... 1-19
**Symbols** ..... i-4
General Information ..... i-4
**System Diagrams - Overview** ..... D-1
General Information ..... D-1
**To the Owner and Operator** ..... i-1
General Information ..... i-1
**Tool Requirements** ..... 2-2
General Information ..... 2-2
**Troubleshooting Procedures and Techniques** ..... TS-1
General Information ..... TS-1
**Troubleshooting Symptoms Charts** ..... TS-2
Alternator Not Charging or Insufficient Charging ..... TS-3
Coolant Contamination ..... TS-4
Coolant Loss ..... TS-5
Coolant Temperature Above Normal ..... TS-7
Coolant Temperature is Below Normal ..... TS-6
Engine Difficult to Start or Will Not Start (Exhaust Smoke) ..... TS-10
Engine Difficult to Start or Will Not Start (No Exhaust Smoke) ..... TS-12
Engine Noise Excessive ..... TS-14
Engine Power Output Low ..... TS-15
Engine Runs Rough at Idle, Warm Engine ..... TS-19
Engine Runs Rough or Misfires ..... TS-21
Engine Speed Surges at Low or High Idle ..... TS-23
Engine Starts But Will Not Keep Running ..... TS-24
Engine Vibration Excessive ..... TS-25
Engine Will Not Crank or Cranks Slowly ..... TS-26
Engine Will Not Reach Rated Speed (RPM) ..... TS-27
Engine Will Not Shut Off ..... TS-29
Exhaust Smoke Excessive Under Load ..... TS-30
Fuel Knock ..... TS-32
Fuel or Lubricating Oil Leaking From Exhaust Manifold ..... TS-33
General Information ..... TS-2
Lubricating Oil Contaminated ..... TS-34
Lubricating Oil Loss ..... TS-35
Lubricating Oil Pressure High ..... TS-37
Lubricating Oil Pressure Low ..... TS-38
Smoke, White — Excessive ..... TS-40
**Turbocharger** ..... A-74
Clean ..... A-76
Install ..... A-76
Preparatory ..... A-74
Remove ..... A-74
Test ..... A-82
**United States and Canada Diesel Engine School Bus** ..... W-12
**Vibration Damper** ..... 7-8
Inspect ..... 7-8
**Water Pump** ..... A-7
Clean ..... A-9
Fill ..... A-12
Install ..... A-10
Preparatory ..... A-7
Remove ..... A-8













# NOTES













# NOTES

























# NOTES













































