Operation and Maintenance Manual Automotive, Recreational Vehicle, Bus, and Industrial B3.9 and B5.9 Series Engines

U.S.A., Canada, Australia, New Zealand, and Puerto Rico

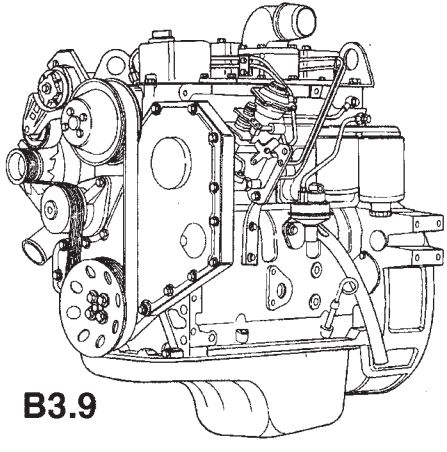

B3.9

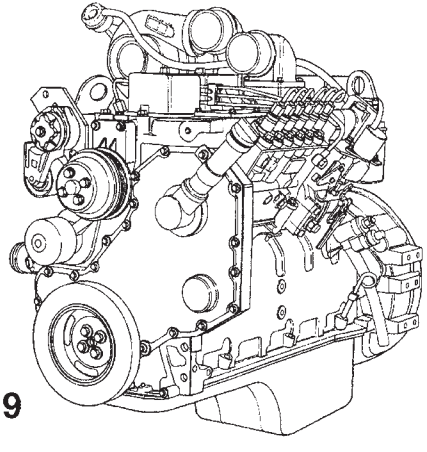

B5.9

00900282

Copyright© 2000
Cummins Engine Company, Inc.
All rights reserved

Bulletin No. 3810205-14
Printed 3/00

Foreword

This manual contains information for the correct operation and maintenance of your Cummins engine. It also includes important safety information, engine and systems specifications, troubleshooting guidelines, and listings of Cummins Authorized Repair Locations and component manufacturers.

Read and follow all safety instructions. Refer to the WARNING in the General Safety Instructions in Section i - Introduction.

Keep this manual with the equipment. If the equipment is traded or sold, give the manual to the new owner.

The information, specifications, and recommended maintenance guidelines in this manual are based on information in effect at the time of printing. Cummins Engine Company, Inc. reserves the right to make changes at any time without obligation. If you find differences between your engine and the information in this manual, contact your local Cummins Authorized Repair Location or call 1-800-DIESELS (1-800-343-7357) toll free in the U.S. and Canada.

The latest technology and the highest quality components were used to produce this engine. When replacement parts are needed, we recommend using only genuine Cummins or ReCon® exchange parts. These parts can be identified by the following trademarks:



Note: Warranty information is located in Section W. Make sure you are familiar with the warranty or warranties applicable to your engine.

Table of Contents

	Section
Introduction	i
Engine Identification	E
Operating Instructions	1
Maintenance Guidelines	2
Maintenance Procedures at Daily Interval	3
Maintenance Procedures at 10,000 Kilometers [6000 Miles], 250 Hours, or 3 Months	4
Maintenance Procedures at 19,000 Kilometers [12,000 Miles], 500 Hours, or 6 Months	5
Maintenance Procedures at 38,000 Kilometers [24,000 Miles], 1000 Hours, or 1 Year	6
Maintenance Procedures at 77,000 Kilometers [48,000 Miles], 2000 Hours, or 2 Years	7
Adjustment, Repair, and Replacement	A
System Diagrams	D

Service Literature	L
Component Manufacturers	M
Service Assistance	S
Troubleshooting Symptoms	TS
Maintenance Specifications	V
Warranty	W
Index	X













Important Reference Numbers

Fill in the part name and number in the blank spaces provided below. This will give you a reference whenever service or maintenance is required.

Part Name	Part Number	Part Number
Engine Model		
Engine Serial Number (ESN)		
Control Parts List (CPL)		
Fuel Pump Part Number		
Electronic Control Module (ECM)		
Electronic Control Module Serial Numbers (ECM)		
Filter Part Numbers:		
• Air Cleaner Element		
• Lubricating Oil Filter		
• Fuel		
• Fuel-Water Separator		
• Coolant		
• Remote Gas		

Part Name	Part Number	Part Number
Governor Control Module (GCM) (if applicable)		
Belt Part Numbers:		
•		
•		
•		
Clutch or Marine Gear (if applicable):		
• Model		
• Serial Number		
• Part Number		
• Oil Type		
• Sea Water Pump		
– Model		
– Part Number		

Section i - Introduction

Section Contents

Page

About the Manual i-2
General Information i-2

Acronyms and Abbreviations i-8
General Information i-8

General Safety Instructions i-6
Important Safety Notice i-6

How to Use the Manual i-3
General Information i-3

Illustrations i-5
General Information i-5

Symbols i-4
General Information i-4

To the Owner and Operator i-1
General Information i-1

THIS PAGE LEFT INTENTIONALLY BLANK

To the Owner and Operator

General Information

Preventive maintenance is the easiest and least expensive type of maintenance. Follow the maintenance schedule recommendations outlined in Maintenance Guidelines (Section 2).

Keep records of regularly scheduled maintenance.

Use the correct fuel, oil, and coolant in your engine as specified in Maintenance Specifications (Section V).

Cummins Engine Company, Inc. uses the latest technology and the highest quality components to produce its engines. Cummins recommends using **only** genuine Cummins parts and ReCon® exchange parts.

Personnel at Cummins Authorized Repair Locations have been trained to provide expert service and parts support. If you have a problem that can **not** be resolved by a Cummins Authorized Repair Location, follow the steps outlined in the Service Assistance (Section S).

About the Manual

General Information

This manual contains information needed to operate and maintain your engine correctly as recommended by Cummins Engine Company, Inc. Additional service literature can be ordered from your local Cummins Distributor. For problems with literature orders, contact (800) DIESELS ((800) 343-7357) for U.S.A. and Canada.

This manual does **not** cover vehicle or equipment maintenance procedures. Consult the vehicle or original equipment manufacturer (OEM) for specific maintenance recommendations.

Both metric and U.S. customary values are listed in this manual. The metric value is listed first, followed by the U.S. customary in brackets.

Numerous illustrations and symbols are used to aid in understanding the meaning of the text. Refer to Symbols (Section i) for a complete listing of symbols and their definitions.

Each section is preceded by a Section Contents to aid in locating information quickly.

How to Use the Manual

General Information

This manual is organized according to intervals at which maintenance on your engine is to be performed. A maintenance chart (table) that gives required intervals and checks to be made is located in Section 2. Locate the interval at which you are performing maintenance; then follow the steps given in that section for all the procedures to be performed. In addition, the procedures completed under previous maintenance intervals **must** also be performed.

Keep a record of all the checks and inspections made. A record form for recording the date or hours at which maintenance checks were performed is located in Section 2.

Refer to Section TS for a guide to troubleshooting your engine. Follow the directions given in that section to locate and correct engine problems.

Refer to Section V for specifications recommended by Cummins Engine Company, Inc. for your engine. Specifications and torque values for each engine system are given in that section.

Symbols

General Information

The following symbols have been used in this manual to help communicate the intent of the instructions. When one of the symbols appears, it conveys the meaning defined below:



WARNING - Serious personal injury or extensive property damage can result if the warning instructions are **not** followed.



CAUTION - Minor personal injury can result or a part, an assembly, or the engine can be damaged if the caution instructions are **not** followed.



Indicates a **REMOVAL or DISASSEMBLY** step.



Indicates an **INSTALLATION or ASSEMBLY step.**



INSPECTION is required.



CLEAN the part or assembly.



PERFORM a mechanical or time **MEASUREMENT.**



LUBRICATE the part or assembly.



Indicates that a **WRENCH or TOOL SIZE** will be given.



TIGHTEN to a specific torque.



PERFORM an electrical **MEASUREMENT.**



Refer to another location in this manual or another publication for additional information.



The component weighs 23 kg [50 lb] or more. To avoid personal injury, use a hoist or get assistance to lift the component.

17800009

Illustrations

General Information

Some of the illustrations throughout this manual are generic and will **not** look exactly like the engine or parts used in your application. The illustrations can contain symbols to indicate an action required and an acceptable or **not** acceptable condition.

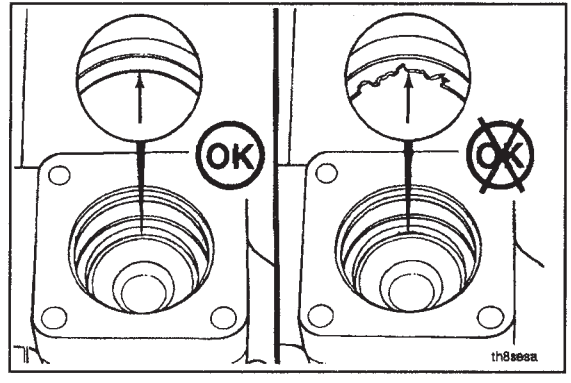

The illustrations are intended to show repair or replacement procedures. The procedure will be the same for all applications, although the illustration can differ.

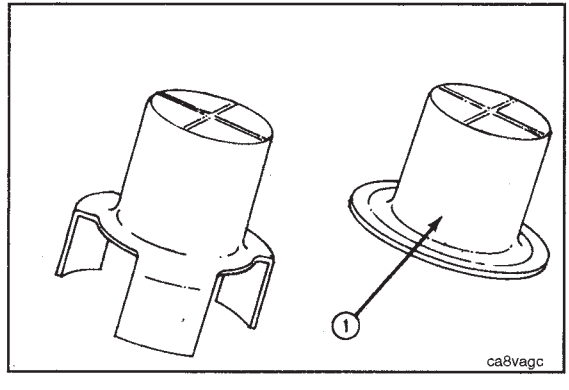

General Safety Instructions

Important Safety Notice

⚠ WARNING ⚠

Improper practices or carelessness can cause burns, cuts, mutilation, asphyxiation or other bodily injury or death.

Read and understand all of the safety precautions and warnings before performing any repair. This list contains the general safety precautions that **must** be followed to provide personal safety. Special safety precautions are included in the procedures when they apply.

- Make sure the work area surrounding the product is dry, well lit, ventilated, free from clutter, loose tools, parts, ignition sources and hazardous substances. Be aware of hazardous conditions that can exist.
- **Always** wear protective glasses and protective shoes when working.
- Rotating parts can cause cuts, mutilation or strangulation.
- Do **not** wear loose-fitting or torn clothing. Remove all jewelry when working.
- Disconnect the battery (negative [-] cable first) and discharge any capacitors before beginning any repair work. Disconnect the air starting motor if equipped to prevent accidental engine starting. Put a ''Do **Not** Operate'' tag in the operator's compartment or on the controls.
- Use ONLY the proper engine barring techniques for manually rotating the engine. Do **not** attempt to rotate the crankshaft by pulling or prying on the fan. This practice can cause serious personal injury, property damage, or damage to the fan blade(s) causing premature fan failure.
- If an engine has been operating and the coolant is hot, allow the engine to cool before you slowly loosen the filler cap and relieve the pressure from the cooling system.
- Do **not** work on anything that is supported ONLY by lifting jacks or a hoist. **Always** use blocks or proper stands to support the product before performing any service work.
- Relieve all pressure in the air, oil, fuel and the cooling systems before any lines, fittings, or related items are removed or disconnected. Be alert for possible pressure when disconnecting any device from a system that utilizes pressure. Do **not** check for pressure leaks with your hand. High pressure oil or fuel can cause personal

injury.

- To prevent suffocation and frostbite, wear protective clothing and ONLY disconnect fuel and liquid refrigerant (freon) lines in a well ventilated area. To protect the environment, liquid refrigerant systems **must** be properly emptied and filled using equipment that prevents the release of refrigerant gas (fluorocarbons) into the atmosphere. Federal law requires capturing and recycling refrigerant.
- To avoid personal injury, use a hoist or get assistance when lifting components that weigh 23 kg [50 lb] or more. Make sure all lifting devices such as chains, hooks, or slings are in good condition and are of the correct capacity. Make sure hooks are positioned correctly. **Always** use a spreader bar when necessary. The lifting hooks **must not** be side-loaded.
- Corrosion inhibitor, a component of SCA and lubricating oil, contains alkali. Do **not** get the substance in your eyes. Avoid prolonged or repeated contact with skin. Do **not** swallow internally. In case of contact, immediately wash skin with soap and water. In case of contact, immediately flood eyes with large amounts of water for a minimum of 15 minutes. IMMEDIATELY CALL A PHYSICIAN. KEEP OUT OF REACH OF CHILDREN.
- Naptha and Methyl Ethyl Ketone (MEK) are flammable materials and **must** be used with caution. Follow the manufacturer's instructions to provide complete safety when using these materials. KEEP OUT OF REACH OF CHILDREN.
- To avoid burns, be alert for hot parts on products that have just been turned off, and hot fluids in lines, tubes, and compartments.
- **Always** use tools that are in good condition. Make sure you understand how to use them before performing any service work. Use ONLY genuine Cummins or Cummins ReCon® replacement parts.
- **Always** use the same fastener part number (or equivalent) when replacing fasteners. Do **not** use a fastener of lesser quality if replacements are necessary.
- Do **not** perform any repair when fatigued or after consuming alcohol or drugs that can impair your functioning.
- Some state and federal agencies in the United States of America have determined that used engine oil can be carcinogenic and can cause reproductive toxicity. Avoid inhalation of vapors, ingestion, and prolonged contact with used engine oil.
- Coolant is toxic. If **not** reused, dispose of in accordance with local environmental regulations.

Acronyms and Abbreviations

General Information

AFC	Air Fuel Control
API	American Petroleum Institute
ASA	Air Signal Attenuator
ASTM	American Society of Testing and Materials
°C	Celsius
CARB	California Air Resources Board
C.I.D.	Cubic Inch Displacement
CNG	Compressed Natural Gas
CPL	Control Parts List
cSt	Centistokes
ECM	Electronic Control Module
ECS	Emission Control System
EPA	Environmental Protection Agency
EPS	Engine Position Sensor
°F	Fahrenheit
GVW	Gross Vehicle Weight
Hg	Mercury
hp	Horsepower
H_2O	Water
ICM	Ignition Control Module
km/l	Kilometers per Liter
kPa	Kilopascal
LNG	Liquid Natural Gas
LTA	Low Temperature Aftercooling
MIP	Mixer Inlet Pressure
MPa	Megapascal
mph	Miles Per Hour
mpq	Miles Per Quart
N•m	Newton-meter
NG	Natural Gas
OEM	Original Equipment Manufacturer
ppm	Parts Per Million
psi	Pounds Per Square Inch
PTO	Power Takeoff
rpm	Revolutions Per Minute
SAE	Society of Automotive Engineers
SCA	Supplemental Coolant Additive
STC	Step Timing Control
VS	Variable Speed
VSS	Vehicle Speed Sensor

Section E - Engine Identification

Section Contents

	Page
Engine Diagrams	E-27
Engine Views	E-27
Engine Identification	E-1
Cummins Engine Nomenclature	E-3
Engine Dataplate	E-1
Fuel Injection Pump Dataplate	E-4
Bosch®	E-4
CAV	E-5
Stanadyne	E-5
Specifications	E-7
Air Intake System	E-19
Batteries (Specific Gravity)	E-26
Cooling System	E-17
Electrical System	E-23
Exhaust System	E-21
Fuel System	E-11
General Specifications	E-7
Lubricating Oil System	E-14

THIS PAGE LEFT INTENTIONALLY BLANK

Engine Identification

Engine Dataplate

The engine dataplate shows specific information about the engine. The engine serial number (ESN) and control parts list (CPL) provide information for ordering parts and for service needs. The engine dataplate **must not** be changed unless approved by Cummins Engine Company, Inc.

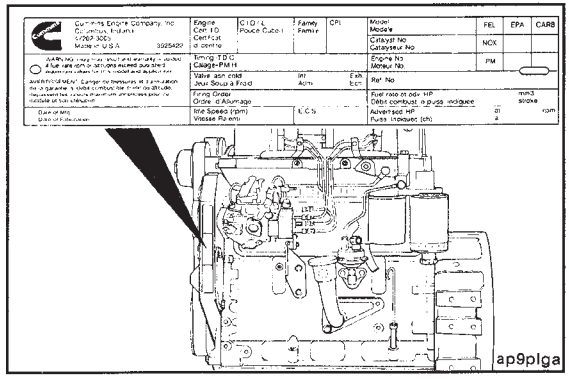

Have the following engine data available when communicating with a Cummins Authorized Repair Facility. The information on the dataplate is **mandatory** when sourcing service parts.

1. Engine Serial Number (ESN)
2. Control Parts List (CPL).

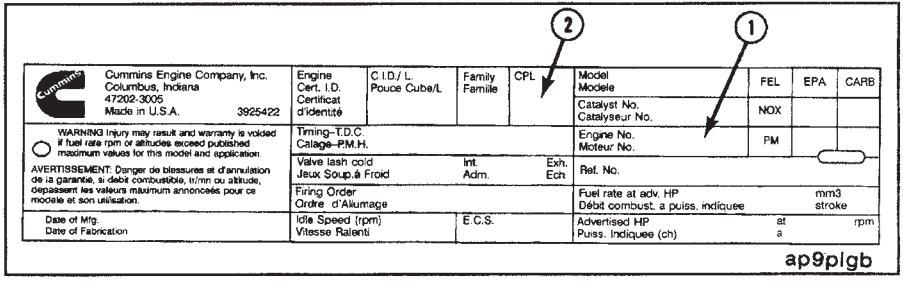

Cummins Engine Nomenclature

Automotive Applications

The model name for automotive engines provides the following engine data:

B5.9-C

B = Engine series

5.9 = Displacement

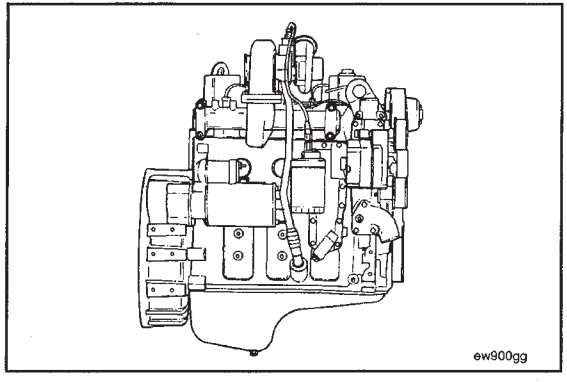

Industrial Applications

The model name for industrial engines provides the following engine data:

B3.9-C

B = Engine series

3.9 = Displacement in liters.

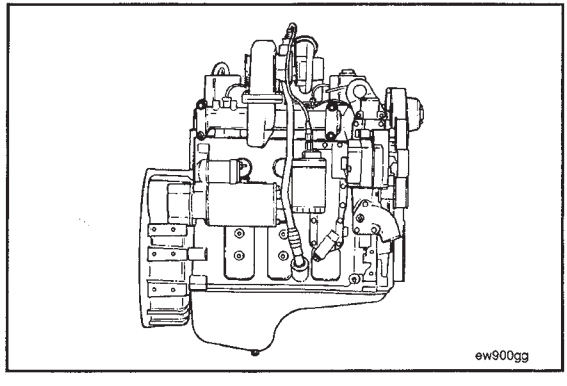

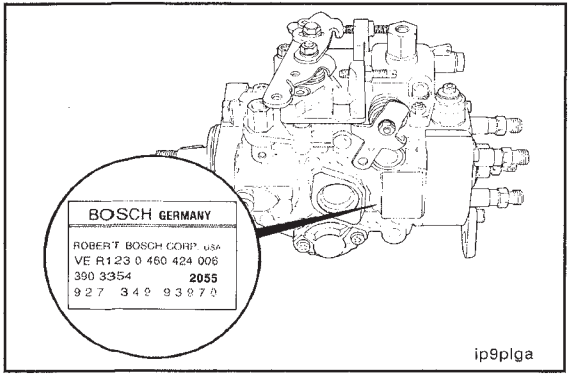

Fuel Injection Pump Dataplate

Bosch®

The injection pump dataplate for the Bosch® VE pump is located on the side of the injection pump. The dataplate provides information for fuel pump calibration.

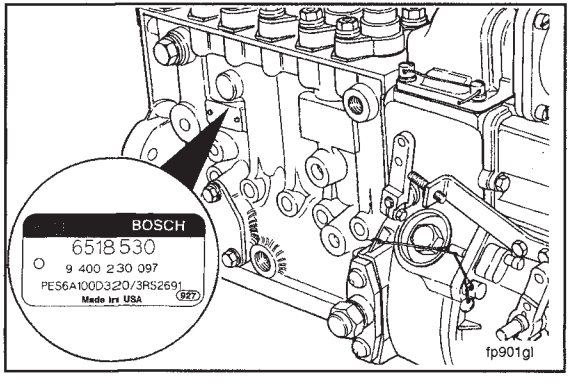

Bosch® In-line Dataplate

The injection pump dataplate for the Bosch® in-line pump is located on the side of the injection pump. The dataplate provides information for fuel pump calibration.

CAV

The injection pump dataplate for the Lucas DPA pump is located on the side of the injection pump. The dataplate provides information for fuel pump calibration.

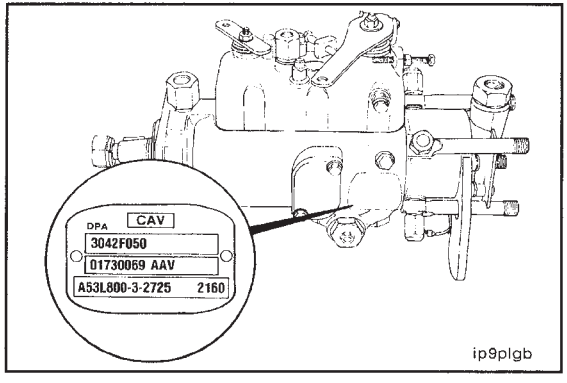

Stanadyne

The injection pump dataplate for the Stanadyne DB4 is located on the side of the injection pump. The dataplate provides information for the fuel pump calibration.

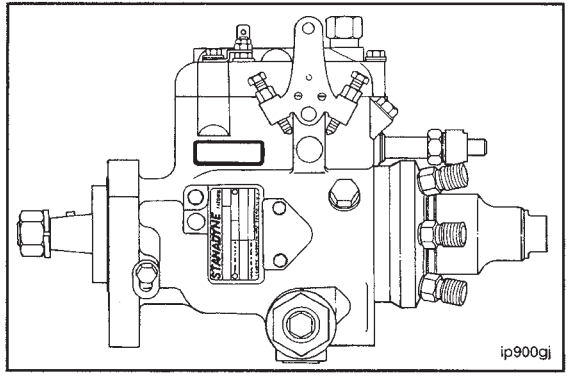

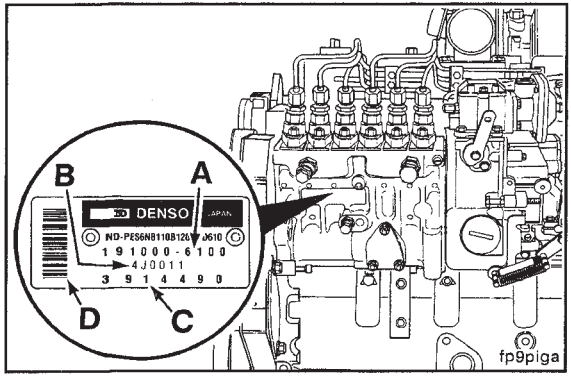

Denso Dataplate

The Denso fuel injection pump dataplate contains the following information:

(A) Fuel injection pump part number

(B) Denso serial number

(C) Cummins part number

(D) Fuel injection pump bar code.

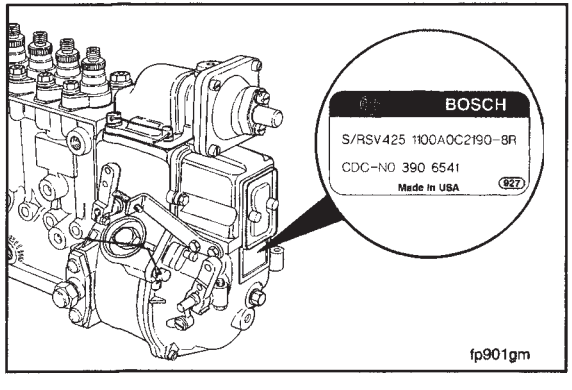

The Cummins part number for the fuel pump-governor combination is located on the governor dataplate.

Specifications

General Specifications

General 4B Engine Data (nonautomotive)

	4B3.9	4BT3.9	4BTA3.9
Bore	102 mm [4.02 in]	102 mm [4.02 in]	102 mm [4.02 in]
Stroke	120 mm [4.72 in]	120 mm [4.72 in]	120 mm [4.72 in]
Displacement	3.9 liters [238 in^3]	3.9 liters [238 in^3]	3.9 liters [238 in^3]
Engine Weight (dry) Less Flywheel and Electric Components	308 kg [679 lb]	320 kg [705 lb]	329 kg [725 lb]
Firing Order	1, 3, 4, 2	1, 3, 4, 2	1, 3, 4, 2
Valve Clearances:			
- Intake	0.25 mm [0.010 in]	0.25 mm [0.010 in]	0.25 mm [0.010 in]
- Exhaust	0.51 mm [0.020 in]	0.51 mm [0.020 in]	0.51 mm [0.020 in]
Compression Ratio	18.5:1	17.5:1	16.5:1
Rotation, Viewed from the Front of the Engine	**Clockwise**	**Clockwise**	**Clockwise**
Aspiration:			
- Naturally Aspirated	X		

	4B3.9	4BT3.9	4BTA3.9
- Turbocharged		X	X
- Aftercooled			X

General 6B Engine Data (nonautomotive)

	6B5.9	6BT5.9	6BTA5.9
Bore	102 mm [4.02 in]	102 mm [4.02 in]	102 mm [4.02 in]
Stroke	120 mm [4.72 in]	120 mm [4.72 in]	120 mm [4.72 in]
Displacement	5.88 liters [359 in^3]	5.88 liters [359 in^3]	5.88 liters [359 in^3]
Engine Weight (dry) Less Flywheel and Electric Components	388 kg [855 lb]	399 kg [880 lb]	411 kg [906 lb]
Firing Order	1, 5, 3, 6, 2, 4	1, 5, 3, 6, 2, 4	1, 5, 3, 6, 2, 4
Valve Clearances:			
- Intake	0.25 mm [0.010 in]	0.25 mm [0.010 in]	0.25 mm [0.010 in]
- Exhaust	0.51 mm [0.020 in]	0.51 mm [0.020 in]	0.51 mm [0.020 in]
Compression Ratio	18.5:1	17.5:1	16.5:1
Rotation, Viewed from the Front of the Engine	**Clockwise**	**Clockwise**	**Clockwise**
Aspiration:			
- Naturally Aspirated	X		
- Turbocharged		X	X
- Aftercooled			X

General Engine Data (automotive)

	B3.9	B5.9
Bore	102 mm [4.02 in]	102 mm [4.02 in]
Stroke	120 mm [4.72 in]	120 mm [4.72 in]
Displacement	3.9 liters [238 in^3]	5.9 liters [360 in^3]
Engine Weight (dry) Less Flywheel and Electric Components	308 to 329 kg [679 to 725 lb]	388 to 411 kg [855 to 906 lb]
Firing Order	1, 3, 4, 2	1, 5, 3, 6, 2, 4
Valve Clearances:		
-Intake	0.25 mm [0.010 in]	0.25 mm [0.010 in]
-Exhaust	0.51 mm [0.020 in]	0.51 mm [0.020 in]
Compression Ratio	(rotary pump) 17.6:1	(in-line pump) 17.9:1
Rotation, Viewed from the Front of the Engine	**Clockwise**	**Clockwise**
Aspiration:		
- Turbocharged	X	X
- Charge-Air Cooled	X	X

Fuel System

4B Fuel System Data (nonautomotive)

Distributor-Type Fuel Injection Pumps	4B3.9	4BT3.9	4BTA3.9
Maximum Allowable Restriction to the Fuel Transfer Pump **Must Not** Exceed	100 mm Hg [4 in Hg]	100 mm Hg [4 in Hg]	100 mm Hg [4 in Hg]
Maximum Allowable Return Line Restriction	518 mm Hg [20.4 in Hg]	518 mm Hg [20.4 in Hg]	518 mm Hg [20.4 in Hg]
Maximum Allowable Pressure Drop across Fuel Filter	35 kPa [5 psi]	35 kPa [5 psi]	35 kPa [5 psi]
Maximum Inlet Pressure to the Injection Pump **Must Not** Exceed	70 kPa [10 psi]	70 kPa [10 psi]	70 kPa [10 psi]
In-Line-Type Fuel Injection Pumps			
Maximum Inlet Restriction to the Fuel Transfer Pump **Must Not** Exceed	100 mm Hg [4 in Hg]	100 mm Hg [4 in Hg]	100 mm Hg [4 in Hg]
Fuel Transfer Pump Minimum Output Pressure	172 kPa [25 psi] High Flow and 90 kPa [13 psi] Low Flow @ Rated rpm	172 kPa [25 psi] High Flow and 90 kPa [13 psi] Low Flow @ Rated rpm	172 kPa [25 psi] High Flow and 90 kPa [13 psi] Low Flow @ Rated rpm
Fuel Filter Restriction (maximum pressure drop across filters)	35 kPa [5 psi]	35 kPa [5 psi]	35 kPa [5 psi]
Fuel Pump Gallery Pressure	* 140 kPa [20 psi] @ Rated rpm	* 140 kPa [20 psi] @ Rated rpm	* 140 kPa [20 psi] @ Rated rpm
Fuel Return Maximum Restriction	518 mm Hg [20.4 in Hg]	518 mm Hg [20.4 in Hg]	518 mm Hg [20.4 in Hg]

* The low-flow fuel transfer pump will have 82.7 kPa [12 psi].

6B Fuel System Data (nonautomotive)

Distributor-Type Fuel Injection Pumps	6B5.9	6BT5.9	6BTA5.9
Maximum Allowable Restriction to the Fuel Transfer Pump **Must Not** Exceed	100 mm Hg [4 in Hg]	100 mm Hg [4 in Hg]	100 mm Hg [4 in Hg]
Maximum Allowable Return Line Restriction	518 mm Hg [20.4 in Hg]	518 mm Hg [20.4 in Hg]	518 mm Hg [20.4 in Hg]
Maximum Allowable Pressure Drop across Fuel Filter	35 kPa [5 psi]	35 kPa [5 psi]	35 kPa [5 psi]
Maximum Inlet Pressure to the Injection Pump **Must Not** Exceed	70 kPa [10 psi]	70 kPa [10 psi]	70 kPa [10 psi]
In-Line-Type Fuel Injection Pumps			
Maximum Inlet Restriction to the Fuel Transfer Pump **Must Not** Exceed	100 mm Hg [4 in Hg]	100 mm Hg [4 in Hg]	100 mm Hg [4 in Hg]
Fuel Transfer Pump Minimum Output Pressure	172 kPa [25 psi] High Flow and 90 kPa [13 psi] Low Flow @ Rated rpm	172 kPa [25 psi] High Flow and 90 kPa [13 psi] Low Flow @ Rated rpm	172 kPa [25 psi] High Flow and 90 kPa [13 psi] Low Flow @ Rated rpm
Fuel Filter Restriction (maximum pressure drop across filters)	35 kPa [5 psi]	35 kPa [5 psi]	35 kPa [5 psi]
Fuel Pump Gallery Pressure	* 140 kPa [20 psi] @ Rated rpm	* 140 kPa [20 psi] @ Rated rpm	* 140 kPa [20 psi] @ Rated rpm
Fuel Return Maximum Restriction	518 mm Hg [20.4 in Hg]	518 mm Hg [20.4 in Hg]	518 mm Hg [20.4 in Hg]

* The low-flow fuel transfer pump will have 82.7 kPa [12 psi].

Fuel System Data (automotive)

Distributor-Type Fuel Injection Pumps	B3.9	B5.9
Maximum Inlet Restriction to the Fuel Transfer Pump **Must Not** Exceed	100 mm Hg [4 in Hg]	100 mm Hg [4 in Hg]
Maximum Allowable Return Line Restriction	518 mm Hg [20.4 in Hg]	518 mm Hg [20.4 in Hg]
Maximum Allowable Pressure Drop across Fuel Filter	35 kPa [5 psi]	35 kPa [5 psi]
Maximum Inlet Pressure to the Injection Pump **Must Not** Exceed	70 kPa [10 psi]	70 kPa [10 psi]

In-Line-Type Fuel Injection Pumps	B3.9	B5.9
Maximum Inlet Restriction to the Fuel Transfer Pump **Must Not** Exceed	100 mm Hg [4 in Hg]	100 mm Hg [4 in Hg]
Fuel Transfer Pump Minimum Output Pressure	175 kPa [25 psi] @ Rated rpm	175 kPa [25 psi] @ Rated rpm
Fuel Filter Restriction (maximum pressure drop across filters)	35 kPa [5 psi]	35 kPa [5 psi]
Fuel Pressure Gallery Pressure	140 kPa [20 psi] @ Rated rpm	140 kPa [20 psi] @ Rated rpm
Fuel Return Maximum Restriction	518 mm Hg [20.4 in Hg]	518 mm Hg [20.4 in Hg]

Lubricating Oil System

4B Lubrication System Data (nonautomotive)

	4B3.9	4BT3.9	4BTA3.9
Lubricating Oil Pressure at Idle - (minimum allowable)	69 kPa [10 psi]	69 kPa [10 psi]	69 kPa [10 psi]
Lubricating Oil Pressure at Rated - (minimum allowable)	207 kPa [30 psi]	207 kPa [30 psi]	207 kPa [30 psi]
Regulating Valve Opening Pressure	449 kPa [65 psi]	449 kPa [65 psi]	449 kPa [65 psi]
Lubricating Oil Capacity:			
Standard Pan **Only**	9.5 liters [10 qt]	9.5 liters [10 qt]	9.5 liters [10 qt]
Total System	10.9 liters [11.5 qt]	11 liters [11.6 qt]	11 liters [11.6 qt]
Low to High	0.9 liter [1 qt]	0.9 liter [1 qt]	0.9 liter [1 qt]

6B Lubrication System Data (nonautomotive)

	6B5.9	6BT5.9	6BTA5.9
Lubricating Oil Pressure at Idle - (minimum allowable)	69 kPa [10 psi]	69 kPa [10 psi]	69 kPa [10 psi]
Lubricating Oil Pressure at Rated - (minimum allowable)	207 kPa [30 psi]	207 kPa [30 psi]	207 kPa [30 psi]
Regulating Valve Opening Pressure	449 kPa [65 psi]	449 kPa [65 psi]	449 kPa [65 psi]
Lubricating Oil Capacity: Standard Pan **Only**	14.2 liters [15 qt]	14.2 liters [15 qt]	14.2 liters [15 qt]
Total System	16.3 liters [17.2 qt]	16.4 liters [17.3 qt]	16.4 liters [17.3 qt]
Low to High	1.9 liters [2 qt]	1.9 liters [2 qt]	1.9 liters [2 qt]

Lubrication System Data (automotive)

	B3.9	B5.9
Lubricating Oil Pressure at Idle - (minimum allowable)	69 kPa [10 psi]	69 kPa [10 psi]
Lubricating Oil Pressure at Rated - (minimum allowable)	207 kPa [30 psi]	207 kPa [30 psi]
Regulating Valve Opening Pressure	449 kPa [65 psi]	449 kPa [65 psi]
Lubricating Oil Capacity:		
Standard Pan **Only**	9.5 liters [10 qt]	14.2 liters [15 qt]
Total System - Liters [U.S. qt]	11 liters [11.6 qt]	16.4 liters [17.3 qt]
Low to High	0.9 liter [1 qt]	1.9 liters [2 qt]

Cooling System

4B Cooling System Data (nonautomotive)

	4B3.9	4BT3.9	4BTA3.9
Coolant Capacity (engine **only**)	7 liters [7.4 qt]	7 liters [7.4 qt]	9.7 liters [10.2 qt]
Standard Modulating Thermostat Range	Start 83°C [181°F]; Fully Open 95°C [203°F]	Start 83°C [181°F]; Fully Open 95°C [203°F]	Start 83°C [181°F]; Fully Open 95°C [203°F]
Pressure Cap:			
104°C [220°F] Systems	103 kPa [15 psi]	103 kPa [15 psi]	103 kPa [15 psi]
99°C [210°F] Systems	48 kPa [7 psi]	48 kPa [7 psi]	48 kPa [7 psi]

6B Cooling System Data (nonautomotive)

	6B5.9	6BT5.9	6BTA5.9
Coolant Capacity (engine **only**)	10.5 liters [11.1 qt]	10.5 liters [11.1 qt]	14.5 liters [15.3 qt]
Standard Modulating Thermostat Range	Start 83°C [181°F]; Fully Open 95°C [203°F]	Start 83°C [181°F]; Fully Open 95°C [203°F]	Start 83°C [181°F]; Fully Open 95°C [203°F]
Pressure Cap:			
104°C [220°F] Systems	103 kPa [15 psi]	103 kPa [15 psi]	103 kPa [15 psi]
99°C [210°F] Systems	48 kPa [7 psi]	48 kPa [7 psi]	48 kPa [7 psi]

Cooling System Data (automotive)

	B3.9	B5.9
Coolant Capacity (engine **only**)	7 liters [7.4 qt]	10.5 liters [11.1 qt]
Standard Modulating Thermostat Range	Start 83°C [181°F]	Fully Open 95°C [203°F]
Pressure Cap:		
104°C [220°F] Systems	103 kPa [15 psi]	103 kPa [15 psi]
99°C [210°F] Systems	48 kPa [7 psi]	48 kPa [7 psi]

Air Intake System

4B Air Intake System (nonautomotive)

	4B3.9	4BT3.9	4BTA3.9
Maximum Allowable Intake Restriction at Rated Speed and Loaded with Dirty Air Filter Element	508 mm H_2O [20 in H_2O]	635 mm H_2O [25 in H_2O]	635 mm H_2O [25 in H_2O]

6B Air Intake System (nonautomotive)

	6B5.9	6BT5.9	6BTA5.9
Maximum Allowable Intake Restriction at Rated Speed and Loaded with Dirty Air Filter Element	508 mm H_2O [20 in H_2O]	635 mm H_2O [25 in H_2O]	635 mm H_2O [25 in H_2O]

Air Intake System Data (automotive)

	B3.9	B5.9
Maximum Allowable Intake Restriction at Rated Speed and Loaded with Dirty Air Filter Element	635 mm H_2O [25 in H_2O]	635 mm H_2O [25 in H_2O]

Exhaust System

4B Exhaust System Data (nonautomotive)

	4B3.9	4BT3.9	4BTA3.9
Maximum Allowable Exhaust Restriction at Rated Speed and Loaded	76.2 mm Hg [3.0 in Hg]	76.2 mm Hg [3.0 in Hg]	76.2 mm Hg [3.0 in Hg]

6B Exhaust System Data (nonautomotive)

	6B5.9	6BT5.9	6BTA5.9
Maximum Allowable Exhaust Restriction at Rated Speed and Loaded	76.2 mm Hg [3.0 in Hg]	76.2 mm Hg [3.0 in Hg]	76.2 mm Hg [3.0 in Hg]

Exhaust System Data (automotive)

	B3.9	B5.9
Maximum Allowable Exhaust Restriction at Rated Speed and Loaded (1991 to 1993 EPA certified)	114.3 mm Hg [4.5 in Hg]	114.3 mm Hg [4.5 in Hg]
Maximum Allowable Exhaust Restriction at Rated Speed and Loaded (1994 to 1998 EPA certified)	152.4 mm Hg [6 in Hg] with oxidation catalyst	152.4 mm Hg [6 in Hg] with oxidation catalyst

Electrical System

4B Electrical System Data (nonautomotive)

	4B3.9	4BT3.9	4BTA3.9
Minimum Recommended Battery Capacity @ -18°C [0°F] With Light Accessories*			
12-VDC Starter	625CCA	625CCA	625CCA
24-VDC Starter	312CCA	400CCA	400CCA
With Heavy Accessories**			
12-VDC Starter	800CCA	800CCA	800CCA
24-VDC Starter	400CCA	400CCA	400CCA
Maximum Allowable Resistance of Starting Circuit			
With 12-VDC Starter - Ohms	0.0012	0.0012	0.0012
With 24-VDC Starter - Ohms	0.0020	0.0020	0.0020

* Typical light accessories include alternator, small steering pump, and disengaged clutch.

** Typical heavy accessories include hydraulic pump and torque converter.

6B Electrical System Data (nonautomotive)

	6B5.9	6BT5.9	6BTA5.9
Minimum Recommended Battery Capacity @ -18°C [0°F] With Light Accessories*			
12-VDC Starter	800CCA	800CCA	800CCA
24-VDC Starter	400CCA	400CCA	400CCA
With Heavy Accessories**			
12-VDC Starter	950CCA	950CCA	950CCA
24-VDC Starter	475CCA	475CCA	475CCA
Maximum Allowable Resistance of Starting Circuit			
With 12-VDC Starter - Ohms	0.0012	0.0012	0.0012
With 24-VDC Starter - Ohms	0.0020	0.0020	0.0020

* Typical light accessories include alternator, small steering pump, and disengaged clutch.

** Typical heavy accessories include hydraulic pump and torque converter.

Electrical System Data (automotive)

	B3.9	B5.9
Minimum Recommended Battery Capacity @ -18°C [0°F]		
With Light Accessories*		
12-VDC Starter	625CCA	800CCA
24-VDC Starter	400CCA	400CCA
With Heavy Accessories**		
12-VDC Starter	800CCA	950CCA
24-VDC Starter	400CCA	475CCA
Maximum Allowable Resistance of Starting Circuit		
With 12-VDC Starter - Ohms	0.0012	0.0012
With 24-VDC Starter - Ohms	0.0020	0.0020

*Typical light accessories include alternator, small steering pump, and disengaged clutch.

**Typical heavy accessories include hydraulic pump and torque converter.

Batteries (Specific Gravity)

Specific Gravity at 27°C [80°F]	State of Charge
1.260 to 1.280	100%
1.230 to 1.250	75%
1.200 to 1.220	50%
1.170 to 1.190	25%
1.110 to 1.130	Discharged

Engine Diagrams

Engine Views

The following illustrations show the locations of the major external engine components, filters, and other service and maintenance points. Some external components will be at different locations for different engine models.

NOTE: The illustrations are **only** a reference to show a typical engine.

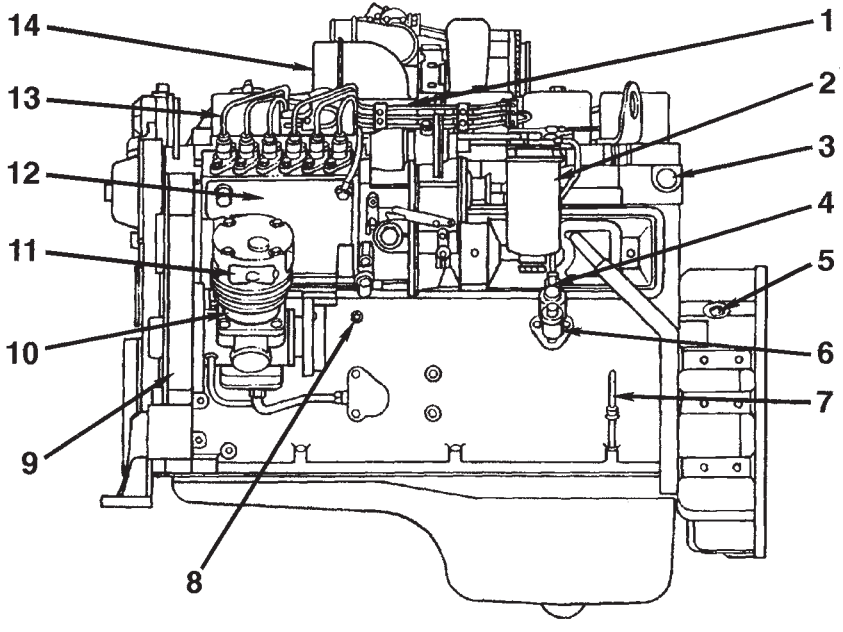

Side View

1. Intake air preheater (optional)
2. Fuel filter/water separator
3. Water heater (3/4-inch NPTF)
4. Fuel inlet connection (1/4-inch NPTF)
5. Magnetic pickup location (3/4-16UNF)
6. Fuel lift pump
7. Dipstick
8. Oil pressure (1/8-inch NPTF)
9. Engine dataplate
10. Air compressor
11. Air compressor intake
12. In-line fuel injection pump
13. High pressure fuel lines
14. Engine air inlet.

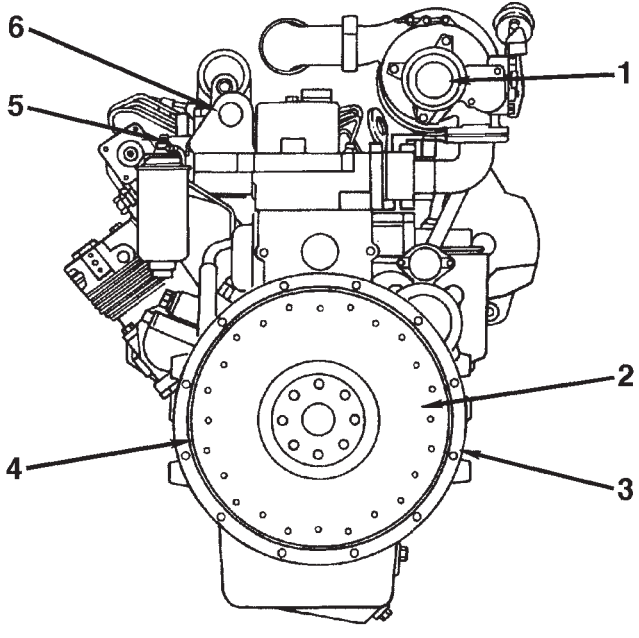

00900279

Rear View

1. Turbocharger exhaust outlet
2. Clutch mounting plate
3. Flywheel housing
4. Flywheel flexplate
5. Fuel return connection
6. Rear engine lifting bracket.

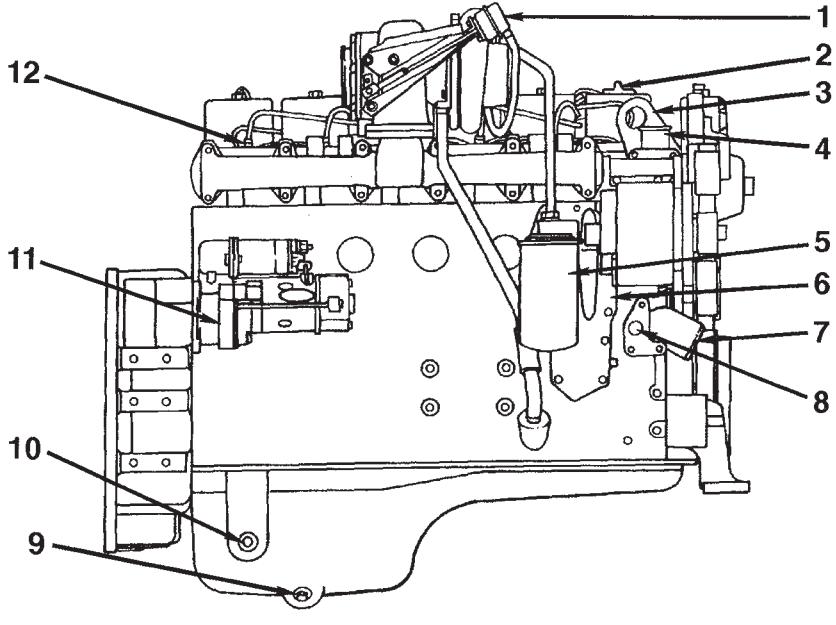

Turbocharger Side View

1. Turbocharger wastegate actuator
2. Oil fill
3. Front engine lifting bracket
4. Water outlet
5. Lubricating oil filter
6. Lubricating oil cooler
7. Water inlet
8. Water heater return (1/2-inch NPTF)
9. Oil drain
10. Provision for oil immersion heater
11. Starter motor solenoid
12. Fuel injection nozzles.

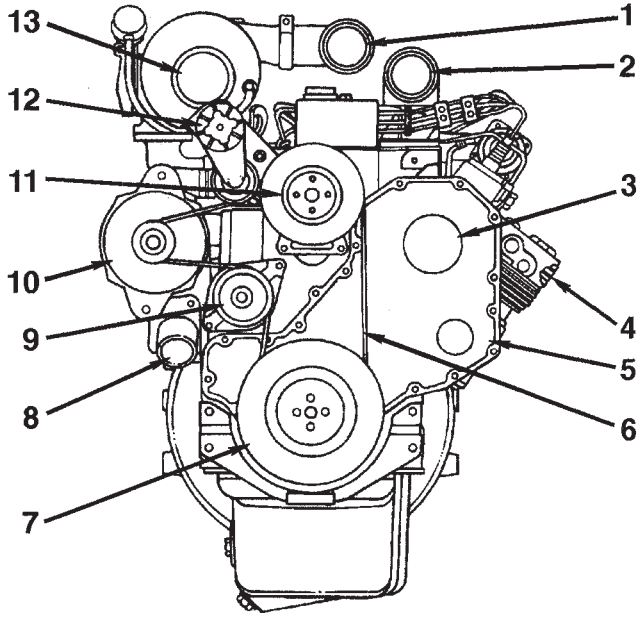

00900277

Front View

1. Turbocharger air outlet
2. Engine air inlet
3. Fuel pump drive cover
4. Air compressor air outlet
5. Front gear cover
6. Fan drive belt
7. Vibration damper
8. Water inlet
9. Water pump
10. Alternator
11. Fan pulley
12. Automatic belt tensioner
13. Turbocharger air inlet.

NOTES

Section 1 - Operating Instructions

Section Contents

	Page
Cold Weather Operation	1-8
Operating Aids	1-8
Shutters	1-9
Winterfronts	1-9
Cold Weather Starting Aids	1-10
Ether Starting Aids	1-11
Grid Heater	1-12
With Mechanical or Electrical Metering Equipment (Ether)	1-10
Engine Operating Range	1-14
General Information	1-14
Engine Shutdown	1-18
General Information	1-18
Normal Starting Procedure	1-3
General Information	1-3
Operating Instructions - Overview	1-1
General Information	1-1
Operating the Engine	1-15
General Information	1-15
Starting Procedure After Extended Shutdown or Oil Change	1-13
General Information	1-13

THIS PAGE LEFT INTENTIONALLY BLANK

Operating Instructions - Overview

General Information

Correct care of your engine will help result in longer life, better performance, and more economical operation.

Follow the daily maintenance checks listed in Maintenance Guidelines, Section 2.

The **new** Cummins engine associated with this manual does **not** require a "break-in" procedure. Section 1 of this manual provides all of the necessary information required for proper engine operation.

Check the oil pressure indicator, temperature indicator, warning lights, and other gauges daily to make sure they are operational.

Avoid exposure of your engine to corrosive chemicals.

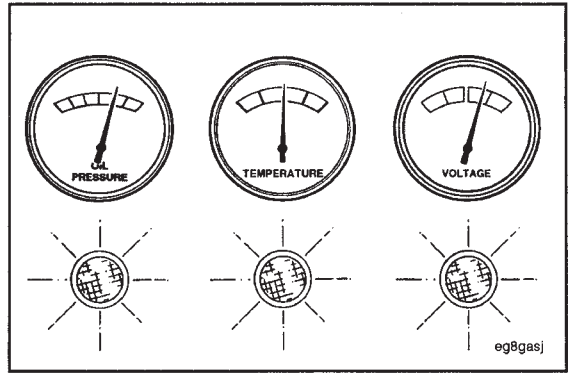

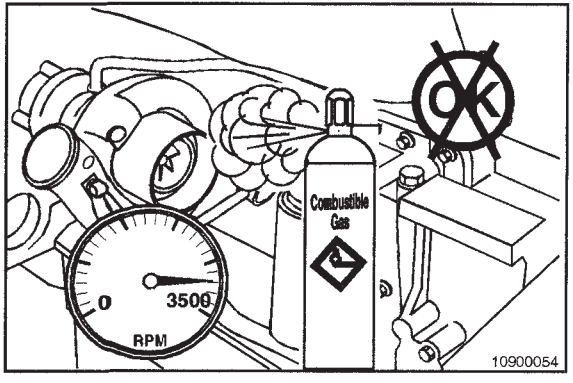

⚠ WARNING ⚠

DO NOT OPERATE A DIESEL ENGINE WHERE THERE ARE OR CAN BE COMBUSTIBLE VAPORS. These vapors can be sucked through the air intake system and cause engine acceleration and overspeeding that can result in a fire, an explosion, and extensive property damage. Numerous safety devices are available, such as air intake shutoff devices, to minimize the risk of overspeeding where an engine, due to its application, might operate in a combustible environment, such as due to a fuel spill or gas leak. Remember, Cummins has no way of knowing the use you have for your engine. THE EQUIPMENT OWNER AND OPERATOR ARE RESPONSIBLE FOR SAFE OPERATION IN A HOSTILE ENVIRONMENT. CONSULT YOUR CUMMINS AUTHORIZED REPAIR LOCATION FOR FURTHER INFORMATION.

Normal Starting Procedure

General Information

△ CAUTION △

To prevent damage to the starting motor, do not engage the starting motor for more than 30 seconds. Wait 2 minutes between each attempt to start (electrical starting motors only).

- Disengage the driven unit, or if equipped, put the transmission in neutral.
- With the throttle in the idle position, turn the key to the ON position, and wait for the WAIT-TO-START lamp to go out; then, turn the key to the START position.
- If the engine does **not** start after three attempts, check the fuel supply system. Absence of blue or white exhaust smoke during cranking indicates no fuel is being delivered.

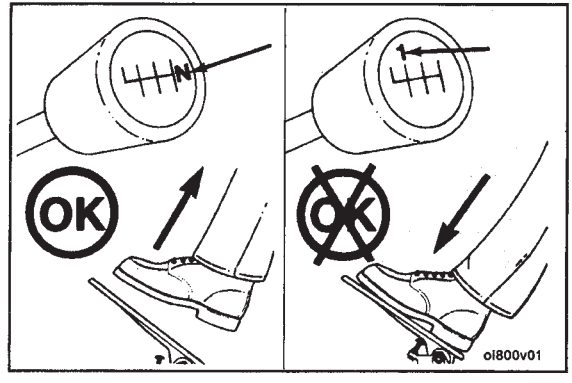

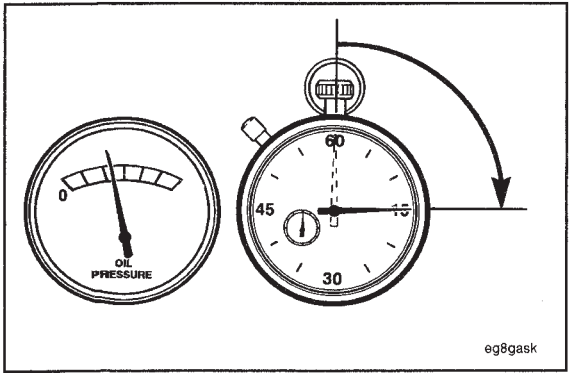

The engine **must** have adequate oil pressure within 15 seconds after starting. If the WARNING lamp indicating low oil pressure has **not** gone out or there is no oil pressure indicated on a gauge within 15 seconds, shut off the engine immediately to avoid engine damage. Confirm the correct oil level in the oil pan.

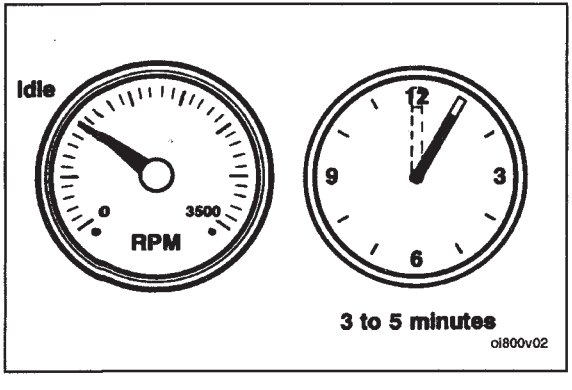

Idle the engine 3 to 5 minutes before operating with a load.

Increase the engine speed (rpm) slowly to provide adequate lubrication to the bearings and to allow the oil pressure to stabilize.

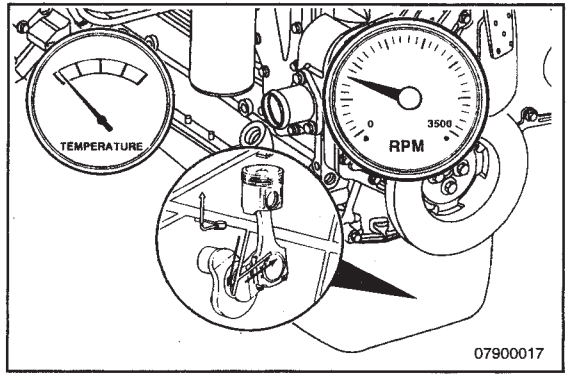

⚠ CAUTION ⚠

Do not operate engine at low idle for long periods (more than 10 minutes). Operating engine for long periods at low idle can damage engine because combustion chamber temperatures will decrease and the fuel will not completely burn. This will cause carbon to build up around the injector spray holes and piston rings that can cause the valves to stick. To avoid damage, operate the engine at a higher idle.

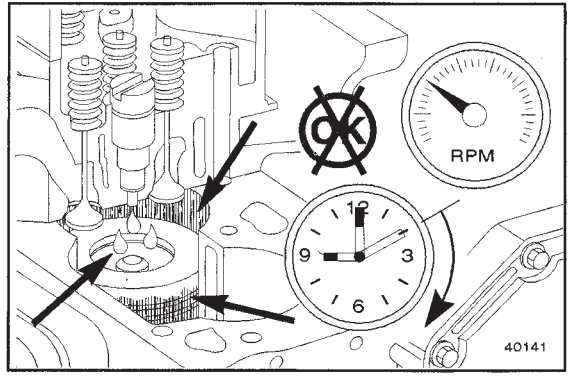

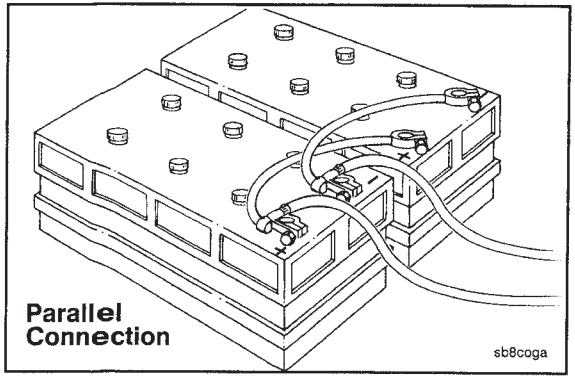

⚠ WARNING ⚠

Batteries can emit explosive gases. To avoid personal injury, always ventilate the compartment before servicing the batteries. To avoid arcing, remove the negative (-) battery cable first and attach the negative (-) battery cable last.

The accompanying illustration shows a typical parallel battery connection. This arrangement doubles the cranking amperage.

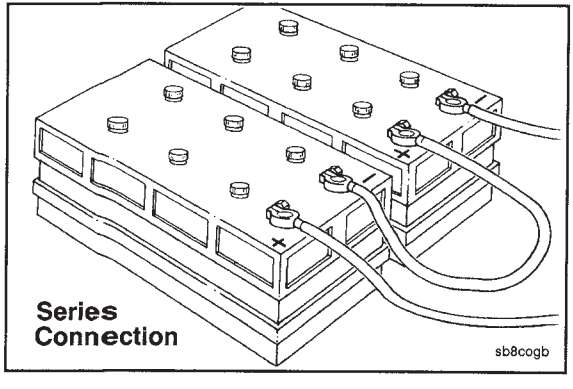

△ CAUTION △

When using jumper cables to start the engine, make sure to connect the cables in parallel: Positive (+) to positive (+) and negative (-) to negative (-). When using an external electrical source to start the engine, turn the disconnect switch to the OFF position. Remove the key before attaching the jumper cables to prevent unintentional starter engagement.

This illustration shows a typical series battery connection. This arrangement, positive (+) to negative (-), doubles the voltage.

Starting Procedure Matrix

Starting Procedure Matrix	
Automotive/Industrial	**Idle Throttle**
All pumps - above 16°C [60°F]- - - - - -	X (after 5 seconds, see Note)
Automotive/Industrial	**Full Throttle**
All pumps - below 16°C [60°F]- - - - -	X Note

(1) Full throttle on the VE pump makes sure there is sufficient start-fuel delivery and helps keep the engine operating once started. The in-line pumps with RQV and RQV-K governors require full throttle to position and hold the rack in the start-fuel position.

NOTE: Full throttle is applied after engaging the starter.

- Disengage the driven unit, or if equipped, put the transmission in neutral.
- Position the fuel shutoff, electrical switch, or mechanism control to the RUN position.

Cold Weather Operation

Operating Aids

Use the following chart as a reference for required cold weather starting aids.

Operation in ambient temperatures below 0°C [32°F] will possibly require special consideration be given to engine starting.

At temperatures below 0°C [32°F], operate the engine at **moderate** speeds for 5 minutes before full loads are applied.

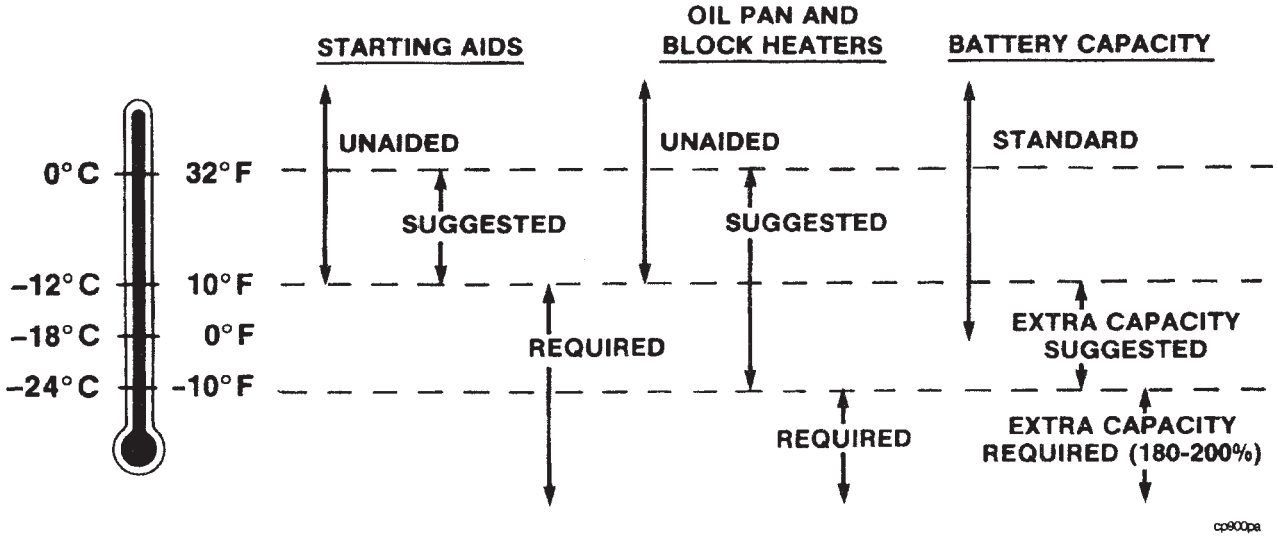

Winterfronts

Winterfronts can be used on a vehicle equipped with charge air cooling (CAC) but **must** be designed to cover part of the frontal area of the cooling system. A minimum of 387 cm^2 [60 in^2] of frontal area **must** be left open to allow airflow for the CAC to function correctly.

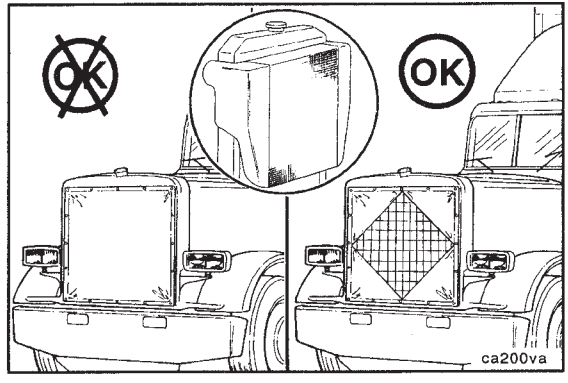

Shutters

Installations of charge air cooler (CAC) engines with shutters also require an intake manifold air temperature switch to open the shutters to prevent excessive intake manifold temperatures. This prevents engine damage due to high intake manifold temperatures as a result of blocked airflow across the CAC.

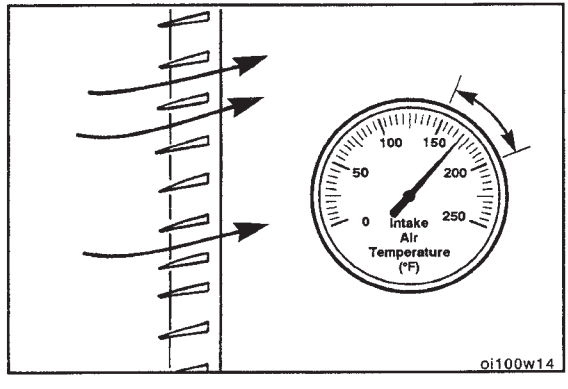

Cold Weather Starting Aids

With Mechanical or Electrical Metering Equipment (Ether)

- Set the throttle at **half** speed.
- Disengage the driven unit, or if equipped, put the transmission in neutral.
- Activate the switch to open the fuel pump shutoff valve.
- While cranking the engine, inject metered amounts of starting fluid.
- Engine oil pressure **must** be indicated on the gauge within 30 seconds after starting.

Ether Starting Aids

⚠ WARNING ⚠

Because of the potential for an explosion, do not use volatile cold starting aids in underground mine or tunnel operations. Ask the local U.S. Bureau of Mines inspector for instructions.

⚠ WARNING ⚠

Starting fluid is highly flammable and explosive. Keep flames, sparks, and arcing switches away from starting fluid.

⚠ WARNING ⚠

Do not breathe starting fluid fumes. Starting fluid fumes can be hazardous to your health.

⚠ CAUTION ⚠

Do not use excessive amounts of starting fluid when starting an engine. The use of too much starting fluid will cause damage to the engine.

- Spray starting fluid into the air cleaner intake while another person cranks the engine.

Grid Heater

⚠ WARNING ⚠

To avoid personal injury and property damage, never use starting fluid if the grid heater option is used. Starting fluid, which contains ether, can cause an explosion.

A grid heater is available that improves cold weather starting characteristics by heating the intake air. It is available for B Series automotive ratings with an in-line injection fuel pump and industrial jacket water aftercooled with a Bosch® in-line injection pump. It can also serve to reduce white smoke if it is energized during cold ambient temperatures while the engine is at idle.

The electric grid heater operates in a preheat and postheat mode. The length of heater on-time is a function of the engine temperature.

If the engine ambient air temperature is greater than 7°C [45°F], the electric grid air heater system will **not** be activated. If the engine ambient air temperature is below 7°C [45°F], the system will operate as follows:

Engine Starting Cycle

1. Turn the ignition key to the RUN position. When the key is in this position, the WAIT-TO-START light will be illuminated for approximately 25 seconds.
   Do **not** crank the engine until the WAIT-TO-START light shuts off.

NOTE: The controller is rest each time the ignition is turned off and the cycle will start over.

2. When the WAIT-TO-START lamp goes out, the preheat cycle is complete. Depress the accelerator pedal and crank the engine. Crank the starter as soon as the WAIT-TO-START lamp goes out.

3. Postheat Cycle:
   Postheating occurs as the grid heater elements are cycled for a while with the engine running. Postheating helps warm the engine up faster and eliminates white smoke. Postheating is determined by the engine ambient air temperature upon start-up.

Starting Procedure After Extended Shutdown or Oil Change

General Information

Complete the following steps after each oil change, or after the engine has been shut down for more than 30 days to make sure the engine receives the correct oil flow through the lubricating oil system.

1. Disconnect the electrical wire from the fuel pump solenoid.
2. Rotate the crankshaft, using the starting motor, until oil pressure appears on the gauge or the warning lamp goes out.
3. Connect the electrical wire to the fuel pump solenoid valve.
4. Start the engine; refer to normal starting procedures in this section.
5. Refer to fuel system - bleeding, section 5 for instruction to vent fuel system.

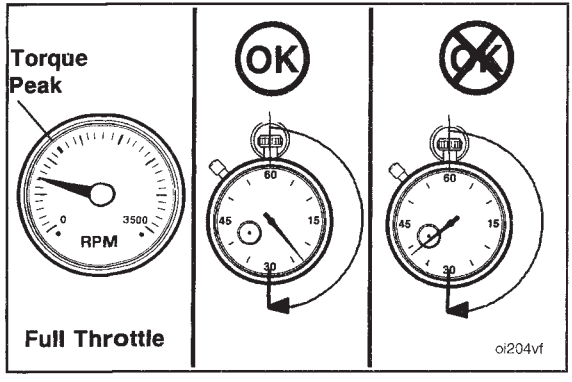

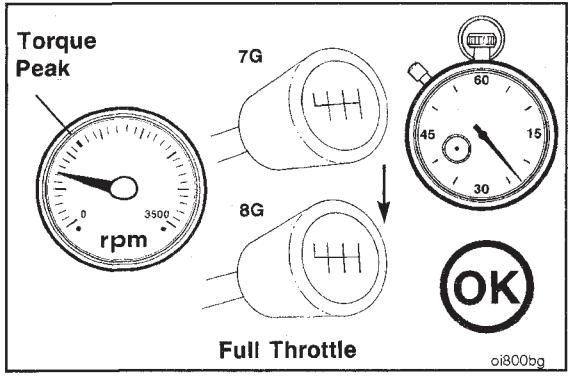

Engine Operating Range

General Information

△ CAUTION △

Do not operate the engine at excessive full-throttle operation below peak torque rpm (refer to engine dataplate for peak torque rpm) for more than 30 seconds. This condition will shorten engine life to overhaul, can cause serious engine damage, and is considered driver abuse.

Cummins engines are designed to operate successfully at full throttle under transient conditions down to peak torque engine speed. This is consistent with recommended operating practices.

Operation of the engine below peak torque rpm can occur during gear shifting due to the difference of ratios between transmission gears, but engine operation **must not** be sustained for more than 30 seconds at full throttle below peak torque rpm.

⚠ CAUTION ⚠

Do not operate the engine beyond high idle speed under any circumstances. Operating the engine beyond high idle speed can cause severe engine damage. When descending a steep grade, use a combination of transmission gears and engine or service brakes to control the vehicle and engine speed.

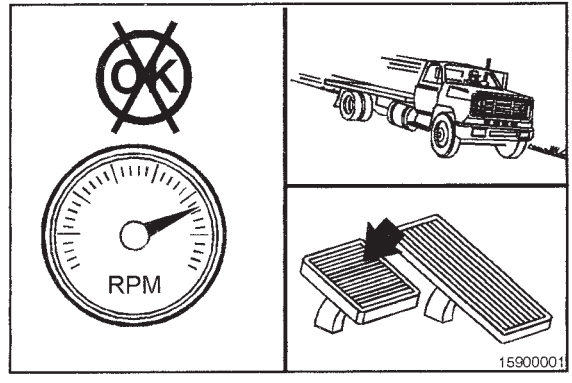

Operating the Engine

General Information

⚠ CAUTION ⚠

Continuous operation with a low coolant temperature below 60°C [140°F], or a high coolant temperature above 100°C [212°F], can damage the engine.

Monitor the oil pressure and coolant temperature gauges frequently. Refer to Lubricating Oil System Specifications and Cooling System Specifications, in Section V, for recommended operating pressures and temperatures. Shut off the engine if any pressure or temperature does **not** meet the specifications.

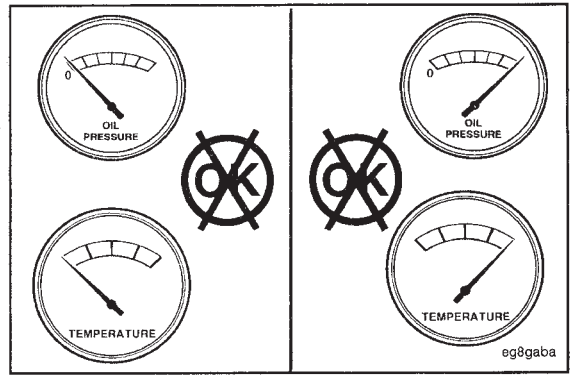

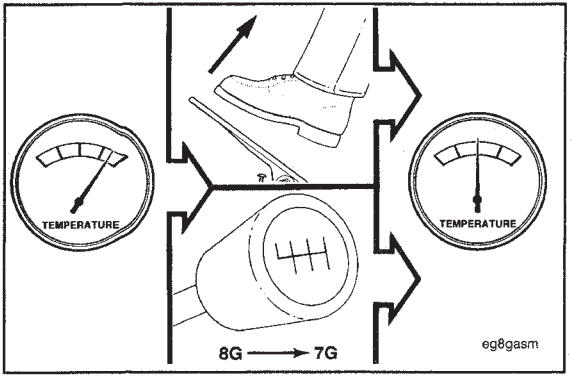

If an overheating condition starts to occur, reduce the power output of the engine by releasing the throttle pedal pressure or shifting the transmission to a lower gear, or both, until the temperature returns to the normal operating range. If the engine temperature does **not** return to normal, shut off the engine and refer to Troubleshooting Symptoms, Section TS, or contact a Cummins Authorized Repair Location.

Most failures give an early warning. Look and listen for changes in performance, sound, or engine appearance that can indicate service or engine repair is needed. Some changes to look for are as follows:

- Engine misfires
- Vibration
- Unusual engine noises
- Sudden changes in engine operating temperatures or pressures
- Excessive smoke
- Loss of power
- An increase in oil consumption
- An increase in fuel consumption
- Fuel, oil, or coolant leaks.

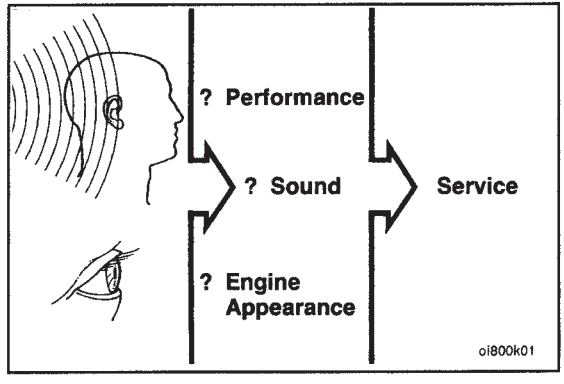

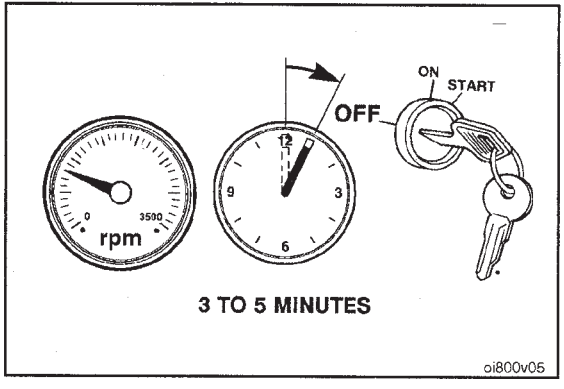

Engine Shutdown

General Information

1. Allow the engine to idle 3 to 5 minutes before shutting it off after a full-load operation. This allows adequate cooldown of pistons, cylinders, bearings, and turbocharger components.
2. Turn the ignition keyswitch to the OFF position.

Section 2 - Maintenance Guidelines

Section Contents

Page

Maintenance Guidelines - Overview 2-1
General Information 2-1

Maintenance Record Form 2-10
General Information 2-10

Maintenance Schedule 2-3
General Information 2-3

Page References for Maintenance Instructions 2-8
General Information 2-8

Tool Requirements 2-2
General Information 2-2

THIS PAGE LEFT INTENTIONALLY BLANK

Maintenance Guidelines - Overview

General Information

Cummins Engine Company, Inc. recommends that the engine be maintained according to the Maintenance Schedule in this section.

If the engine is operating in ambient temperatures consistently below -18°C [0°F] or above 38°C [100°F], perform maintenance at shorter intervals. Shorter maintenance intervals are also required if the engine is operated in an abnormally dusty environment or if frequent stops are made. See your Cummins Authorized Repair Location for recommended intervals.

If your engine is equipped with a component or an accessory **not** manufactured by Cummins Engine Company, Inc., refer to the component manufacturer's maintenance recommendations. Suppliers' addresses and telephone numbers are provided in Component Manufacturers (Section M).

Use the chart provided at the end of this section as a convenient way to keep a record of maintenance performed.

Tool Requirements

General Information

In the text, a symbol followed by the wrench size or tool description is used to identify the tooling required to perform each step. More than one tool is needed.

Sockets	Wrenches	Other Tools
19 mm	19 mm	Filter wrenches (75 to 80 mm and 90 to 95 mm)
17 mm	17 mm	Ratchet (1/2-inch drive)
15 mm	15 mm	Flat-blade screwdriver
	14 mm	Torque wrench
	13 mm	Allen wrench (5/16 inch)
	10 mm	Feeler gauges (0.25 mm and 0.51 mm)
		Engine barring gear, Part No. 3824591

Maintenance Schedule

General Information

B3.9 and B5.9 Series Engine Maintenance Schedule:				
Daily or Refueling	**Every 10,000 km [6000 mi] 250 Hours, or 3 Months**	**Every 19,000 km [12,000 mi], 500 Hours, or 6 Months**	**Every 38,000 km [24,000 mi], 1000 Hours, or 1 Year**	**Every 77,000 km [48,000 mi], 2000 Hours, or 2 Years**
Maintenance Check	Check/Inspect	Change/Replace/Inspect	Check/Inspect	Check/Inspect/ Replace
• Oil level • Coolant level • Fan • Drive belt • Fuel-water separator.	• Change lubricating oil (1). • Replace lubricating oil filter. • Inspect air cleaner. • Inspect intake system. • Check charge air cooler (4).	• Change lubricating oil (1). • Replace lubricating oil filter. • Replace fuel filter (5). • Inspect air cleaner. • Inspect air intake system. • Check antifreeze (3). • Check charge air cooler (4).	• Change lubricating oil (1). • Replace lubricating oil filter. • Replace fuel filter (5). • Adjust valve lash clearance (2). • Inspect air cleaner. • Inspect intake system. • Check charge air cooler (4). • Check antifreeze (3). • Inspect fan hub. • Inspect belt tensioner. • Check belt tension.	• Change lubricating oil (1). • Replace lubricating oil filter. • Replace fuel filter (5). • Change antifreeze (3). • Inspect air cleaner. • Check charge air cooler (4). • Inspect intake system. • Inspect fan hub. • Inspect belt tensioner. • Check belt tension. • Inspect damper.

(1) Refer to the Oil Change Interval tables provided in this section to find the specific oil change interval for individual applications.
(2) Initial valve lash clearance adjustment, subsequent adjustments to be performed at 77,000-km [48,000-mi] intervals or every 8th oil change for automotive engines or 2000-hour, 2-year intervals for industrial engines.
(3) Heavy-duty year-around antifreeze that meets the critical composition of GM6038M **must** be used. The change interval is 2 years or 320,000 km [200,000 mi], whichever occurs first. Antifreeze is essential for freeze, overheat, and corrosion protection.
(4) Service interval is 2 years or 320,000 km [200,000 mi], whichever occurs first.
(5) Service interval is every other oil change or 19,000 km [12,000 mi], 500 hours, or 6 months, whichever occurs first.

Lubricating Oil Drain Interval

Refer to the following flowchart to determine the maximum recommended oil change and filter change intervals in kilometers, miles, hours, or months, whichever occurs first.

Is the vehicle an on-highway application?

If Yes -

Refer to Table 1

If No -

Is the vehicle used in a construction, mining, or logging operation?

If Yes -

Refer to Table 2

If No -

Is the vehicle used in an agricultural or stationary power application?

If Yes -

Refer to Table 3

If No -

Use the following oil change interval, 10,000 km [6000 mi], 250 hours, or 3 months, whichever occurs first.

Table 1 Use the following oil drain intervals for your application (1):				
Vehicle/Equipment	**km**	**mi**	**Hours**	**Months**
Refuse Truck	10,000	6000	250	3
Mixer/Dumper	10,000	6000	250	3
Delivery Truck	10,000	6000	250	6
Shuttle or Transit Bus	10,000	6000	250	3
School Bus	10,000	6000	250	6
Fire Truck	10,000	6000	250	3
Recreational Vehicle	10,000	6000	250	6
Regional Haul Truck	17,000	10,000	250	3
Coach Bus	17,000	10,000	250	3

(1) Or whichever occurs first. If your application accumulates high hours and low mileage, the change interval is determined by hours.
Note: If the vehicle accumulates 12,875 km [8000 mi] in a month, the oil change interval will be 17,000 km [10,000 mi] or 250 hours, whichever occurs first.

Table 2 Use the following oil drain intervals for your application (1):				
Vehicle/Equipment	**km**	**mi**	**Hours**	**Months**
Truck Crane	10,000	6000	250	3
Yard Spotter	10,000	6000	250	3
Paver	N/A	N/A	250	6
Cranes	N/A	N/A	250	6
Backhoe	N/A	N/A	250	6
Dozer	N/A	N/A	250	6
Scraper	N/A	N/A	250	6
Skidder	N/A	N/A	250	6
(1) Or whichever occurs first. If the application accumulates high hours and low mileage, the change interval is determined by hours.				

Table 3 Use the following oil drain intervals for your application (1):		
Vehicle/Equipment	**Hours**	**Months**
Farm Tractors	250	6
Combines	250	6
Irrigation Equipment	250	6
Generator Set	250	6
Air Compressor	250	6
Fire Pump	250	6
Pleasure Boat	250	6
Work Boat	250	3
(1) Or whichever occurs first. If the application accumulates high hours and low mileage, the change interval is determined by hours.		

Arctic Operation

△ CAUTION △

The use of a synthetic-base oil does not justify extended oil change intervals. Extended oil change intervals can decrease engine life due to factors such as corrosion, deposits, and wear.

If an engine is operated in ambient temperatures consistently below -23°C [-10°F] and there are no provisions to keep the engine warm when it is **not** in operation, use a synthetic CE/SF or higher API classification engine oil with adequate low-temperature properties, such as 5W-20 or 5W-30.

The oil supplier is responsible for meeting the performance service specifications represented with its product.

Page References for Maintenance Instructions

General Information

For your convenience, listed below are the page numbers that contain specific instructions for performing the maintenance checks listed in the maintenance schedule.

Daily or Refueling - Maintenance Check

- Coolant Level - Inspect 3-4
- Drive Belts - Inspect 3-7
- Fan Cooling - Inspect 3-8
- Fuel-Water Separator - Drain 3-2
- Lubricating Oil Level - Check 3-3

Every 10,000 km [6000 mi], 250 Hours, or 3 Months - Maintenance Check

- Air Cleaner Restriction - Inspect 4-11
- Air Intake Piping - Inspect 4-7
- Charge Air Cooler - Check/Correct 4-8
- Lubricating Oil and Filters - Change 4-3

Every 19,000 km [12,000 mi], 500 Hours, or 6 Months - Maintenance Check

- Cooling System - Antifreeze Check 5-9
- Fuel Filter (spin-on type) - Replace 5-2
- Fuel Supply Lines - Vent 5-4
- Injector Supply Lines (high pressure) - Vent 5-7

Every 38,000 km [24,000 mi], 1000 Hours, or 1 Year - Maintenance Check

- Drive Belt - Test 6-8
- Drive Belt and Tensioner - Inspect 6-8
- Overhead Set - Measure 6-2

Every 77,000 km [48,000 mi], 2000 Hours, or 2 Years - Maintenance Check

- Air Compressor - Inspect 7-9
- Cooling System - Drain/Flush/Fill 7-2
- Vibration Damper - Inspect 7-8
- Cooolant and Antifreeze - Change 7-2

Maintenance Record Form

General Information

Maintenance Record	
Engine Serial No.:	Engine Model:
Owner's Name:	Equipment Name/Number:

Key to table headings:

A = Date
B = km [Miles], Hours or Time Interval
C = Actual km [Miles] or Hours
D = Maintenance Check Performed
E = Check Performed By
F = Comments

A	B	C	D	E	F

A	B	C	D	E	F

NOTES

Section 3 - Maintenance Procedures at Daily Interval

Section Contents

Page

Coolant Level 3-4
Maintenance Check 3-4

Daily Maintenance Procedures - Overview 3-1
General Information 3-1

Drive Belts 3-7
Maintenance Check 3-7

Fan, Cooling 3-8
Maintenance Check 3-8

Fuel-Water Separator 3-2
Maintenance Check 3-2

Lubricating Oil Level 3-3
Maintenance Check 3-3

THIS PAGE LEFT INTENTIONALLY BLANK

Daily Maintenance Procedures - Overview

General Information

Preventative maintenance begins with day-to-day awareness of the condition of the engine and its systems.

Before starting the engine, check the oil and coolant levels. Look for:

- Leaks
- Loose or damaged parts
- Worn or damaged belts
- Any change in engine appearance.

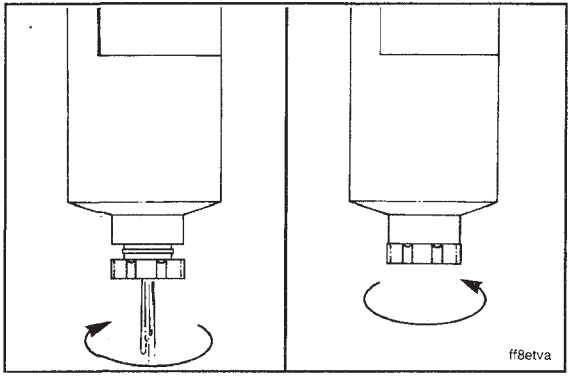

Fuel-Water Separator

Maintenance Check

CAUTION

Do not overtighten the valve. Overtightening can damage the threads.

Drain the water and sediment from the separator daily.

Shut off the engine. Use your hand to open the drain valve. Turn the valve **counterclockwise** four complete turns until the valve drops down 1 inch. Drain the filter sump of water until clear fuel is visible.

Push the valve up and turn the valve **clockwise** to close the drain valve.

NOTE: If more that 2 ounces are drained, refilling the filter is required to prevent hard starting. Refer to Section 5 for venting the low-pressure fuel lines.

Lubricating Oil Level

Maintenance Check

The vehicle **must** be level when checking the oil level to make sure the measurement is correct.

Shut off the engine for an accurate reading.

Never operate the engine with the oil level below the L (low) mark, or above the H (high) mark. Wait at least 10 minutes after shutting off the engine to check the oil level. This allows time for the oil to drain into the oil pan.

Refer to Lubricating Oil Recommendations/Specifications in Section V for oil recommendations.

Low Mark to High Mark Oil Capacity	
Four Cylinder	0.95 liter [1qt]
Six Cylinder	1.89 liters [2 qt]

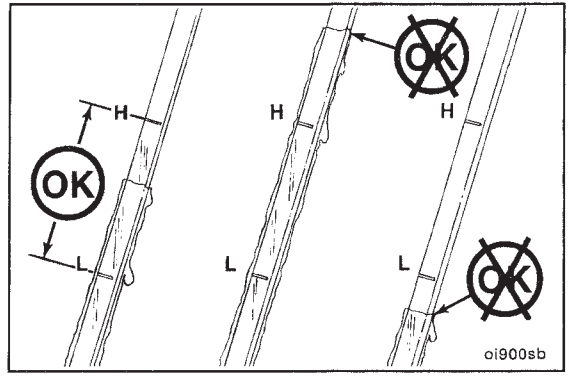

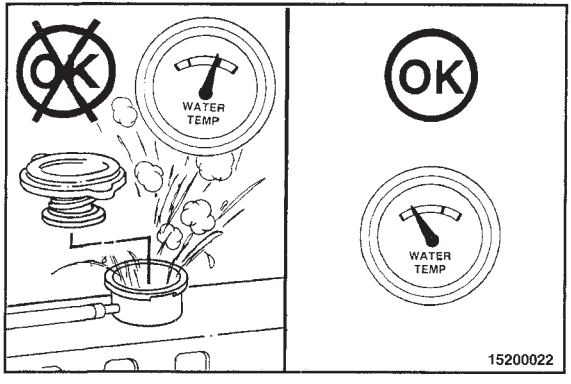

Coolant Level

Maintenance Check

⚠ WARNING ⚠

Do not remove a pressure cap from a hot engine. Wait until the coolant temperature is below 50°C [122°F] before removing the pressure cap. Heated coolant spray or steam can cause personal injury.

Never use a sealing additive to stop leaks in the cooling system. This can result in cooling system plugging and inadequate coolant flow, causing the engine to overheat.

The coolant level **must** be checked daily.

⚠ CAUTION ⚠

Do not add cold coolant to a hot engine. Engine castings can be damaged. Allow the engine to cool to below 50°C [122°F] before adding coolant.

If additional coolant is added to the cooling system, a 50-percent mixture of water and antifreeze **must** be premixed before being added to the system. Since the ability of antifreeze to remove heat from the engine is **not** as good as water, pouring antifreeze into the engine first could contribute to an overheated condition before the liquids are completely mixed. Refer to Coolant Recommendations and Specifications in Section V.

NOTE: On applications that use a coolant recovery system, check to make sure the coolant is at the appropriate level on the coolant recovery tank, depending on engine temperature.

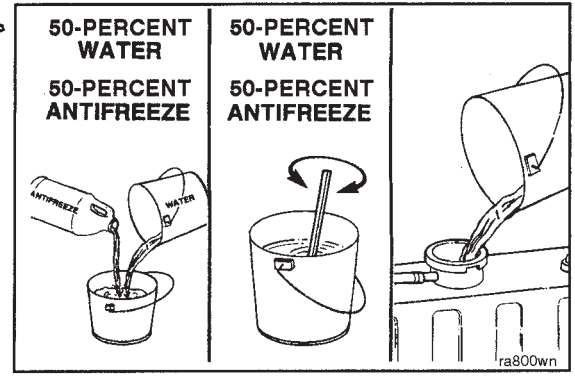

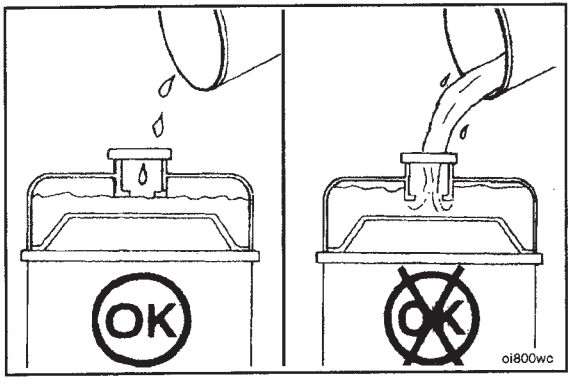

Fill the cooling system with coolant to the bottom of the fill neck in the radiator fill or expansion tank.

NOTE: Some radiators have two fill necks, both of which **must** be filled when the cooling system is drained.

Drive Belts

Maintenance Check

Inspect the belts daily. Check the belt for intersecting cracks. Traverse (across the belt width) cracks are acceptable. Longitudinal (direction of belt length) cracks that intersect with transverse cracks are **not** acceptable. Replace the belt if it is frayed or has pieces of material missing. Refer to Section A for belt adjustment and replacement procedures.

Belt damage can be caused by:

- Incorrect tension
- Incorrect size or length
- Pulley misalignment
- Incorrect installation
- Severe operating environment
- Oil or grease on the side of belts.

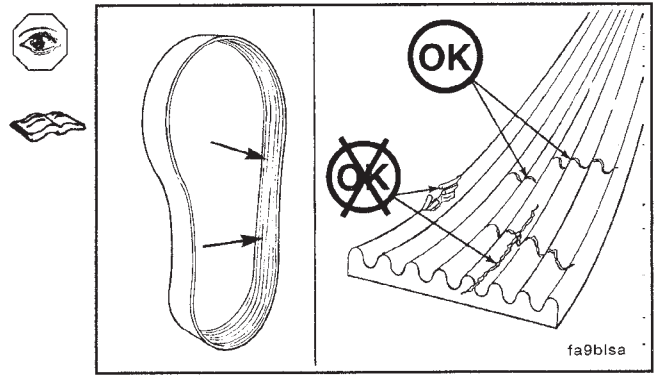

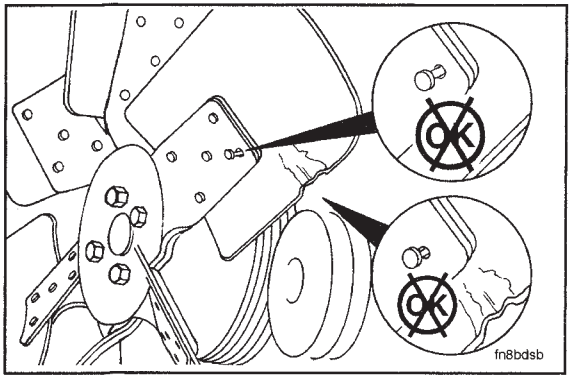

Fan, Cooling

Maintenance Check

⚠ WARNING ⚠

Do not straighten a bent fan blade or continue to use a damaged fan. A bent or damaged fan blade can fail during operation and cause personal injury or property damage.

NOTE: Rotate the crankshaft by using the engine barring gear.

An inspection of the cooling fan is required daily. Check for cracks, loose rivets, and bent or loose blades. Check the fan to make sure it is securely mounted. Tighten the cap-screws if necessary. Replace any fan that is damaged.

Maintenance Procedures at 10,000 Kilometers [6000 Miles], 250 Hours, or 3 Months

Section Contents

Page

Air Cleaner Restriction 4-11
Maintenance Check 4-11

Air Intake Piping 4-7
Inspect for Reuse 4-7

Charge-Air Cooler (CAC) 4-8
Clean 4-9
Inspect for Reuse 4-8

Lubricating Oil and Filters 4-2
Drain 4-2
Fill 4-5
Install 4-3
Remove 4-3

Maintenance Procedures - Overview 4-1
General Information 4-1

THIS PAGE LEFT INTENTIONALLY BLANK

Maintenance Procedures - Overview

General Information

⚠ WARNING ⚠

Some state and federal agencies have determined that used engine oil can be carcinogenic and cause reproductive toxicity. Avoid inhalation of vapors, ingestion, and prolonged contact with used engine oil.

Protect the environment:
Handling and disposal of used engine oil is subject to federal, state, and local laws and regulations. Use authorized waste disposal facilities, including civic amenity site and garages providing authorized facilities for receipt of used oil. If in doubt, contact state and environmental authorities or the Environmental Protection Agency for guidance about proper handling and disposal of used engine oil.

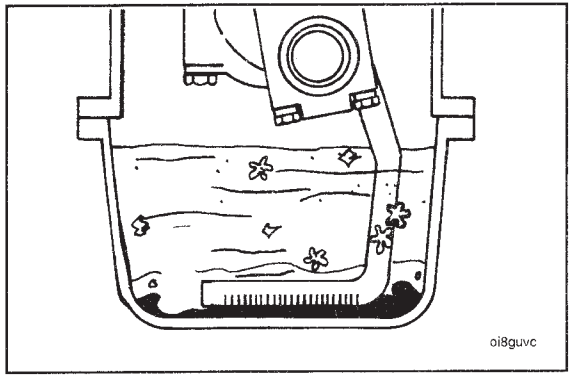

Lubricating Oil and Filters

Drain

NOTE: If the engine is in service, the oil drain interval of 10,000 km [6000 mi], 250 hours, or 3 months (or approved extended interval from the table in Section 2) **must** be used.

Change the oil filters to remove the contaminants suspended in the oil.

NOTE: Drain the oil **only** when it is hot and the contaminants are in suspension.

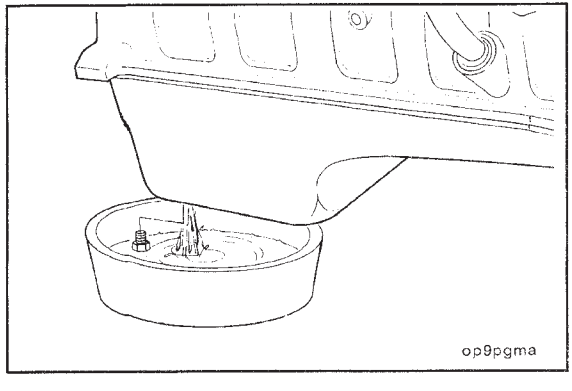

⚠ WARNING ⚠

To avoid personal injury, avoid direct contact of hot oil with your skin.

17 mm

Operate the engine until the water temperature reaches 60°C [140°F]. Shut the engine off. Remove the oil drain plug.

NOTE: Use a container that can hold at least 20 liters [15 qt] of oil.

Remove

90- to 95-mm Filter Wrench

Clean the area around the lubricating oil filter head. Remove the filter. Clean the gasket surface of the filter head.

NOTE: The o-ring can stick on the filter head. Make sure it is removed before installing the new filter.

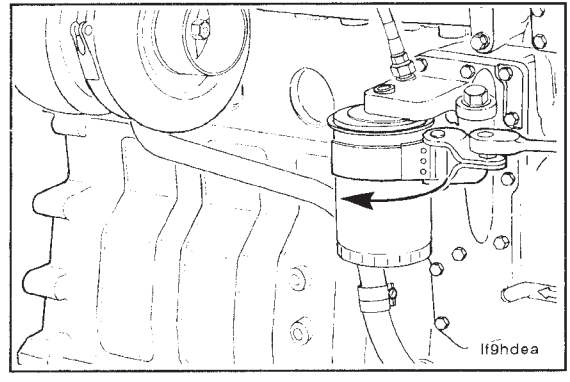

Install

⚠ CAUTION ⚠

A six-cylinder oil filter can be used on a four-cylinder engine. Do not use a four-cylinder oil filter on a six-cylinder engine. Use of a four-cylinder oil filter on a six-cylinder engine will result in engine damage.

Make sure the correct oil filter is used.

The filter for the six-cylinder engine is longer than the filter for the four-cylinder engine.

A = Standard for four-cylinder applications

B = Standard for six-cylinder applications.

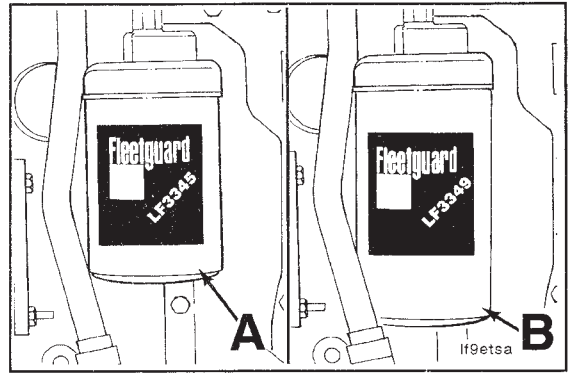

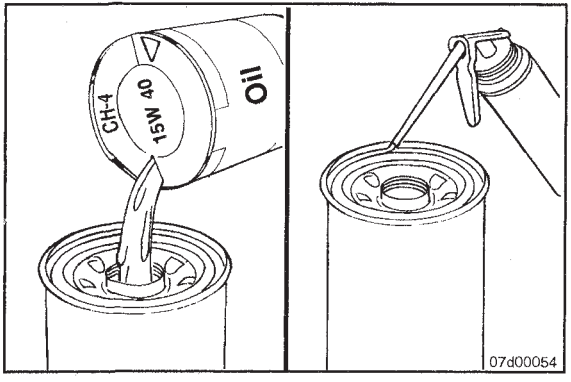

NOTE: Fill the filter with clean lubricating oil before installation.

Apply a light film of lubricating oil to the gasket sealing surface before installing the filter.

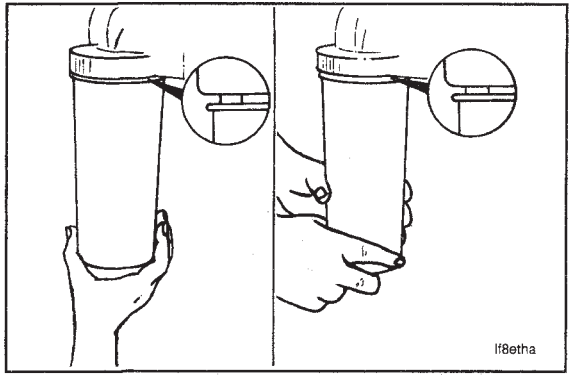

△ CAUTION △

Mechanical overtightening of filter can distort the threads or damage the filter element seal.

Install the filter as specified by the filter manufacturer.

Clean the sealing surface.

Check the oil drain plug threads.

Install the drain plug.

Steel Pan

Torque Value: 80 N•m [59 ft-lb]

Aluminum Pan

Torque Value: 60 N•m [44 ft-lb]

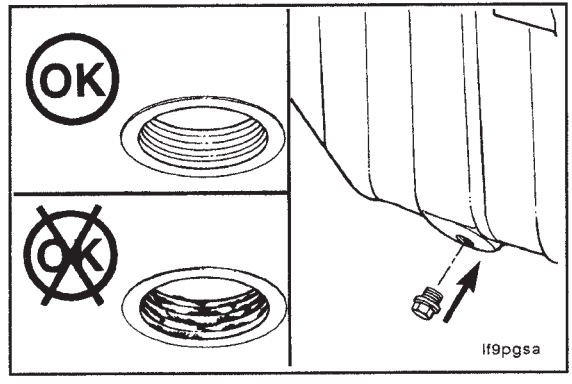

Fill

NOTE: Use a high-quality 15W-40 multiviscosity lubricating oil, such as Valvoline Premium Blue®, or its equivalent in Cummins engines. Choose the correct lubricating oil for your operating climate as outlined in Section 2.

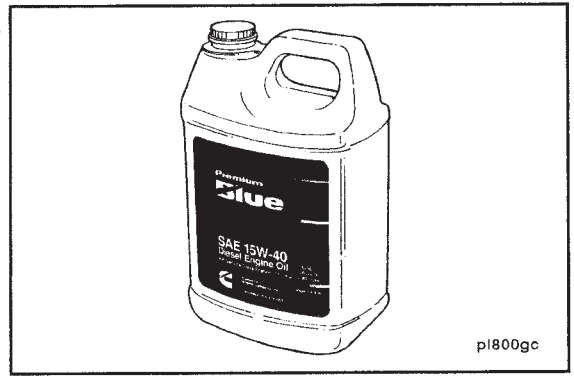

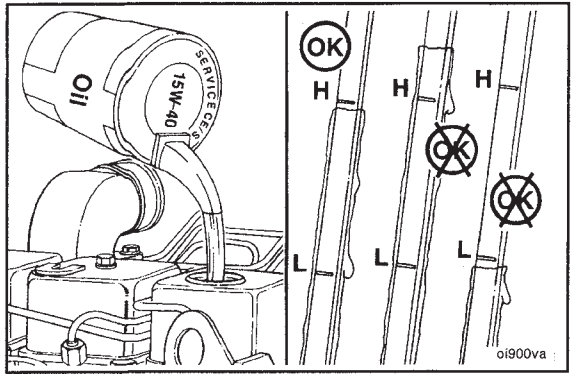

Fill the engine with clean lubricating oil to the proper level.

NOTE: Total system capacity assumes lubricating oil pan plus lubricating oil filter.

Some applications use a slightly different lubricating oil pan capacity, and all lubricating oil quantities **must** be adjusted accordingly. Contact your local Cummins Distributor if you have any questions.

	Four Cylinder	Six Cylinder
Pan Capacity	9.5 liters [10 qt]	14.2 liters [15 qt]
Total system Capacity	10.2 liters [10.8 qt]	15.1 liters [16 qt]

NOTE: Some 6B applications use a reduced capacity pan 10.4 liters [11 qts], and some have increased capacity of 16 liters [17 qt]. Fill quantities **must** be adjusted accordingly.

Operate the engine, and check for leaks at the filters and oil drain plug.

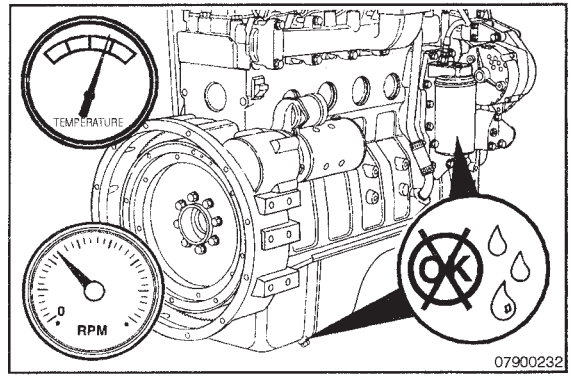

Air Intake Piping

Inspect for Reuse

Inspect the intake piping for cracked hoses, loose clamps, or punctures that can allow dirt and debris to enter the engine.

Tighten or replace parts as necessary to make sure the air intake system does **not** leak.

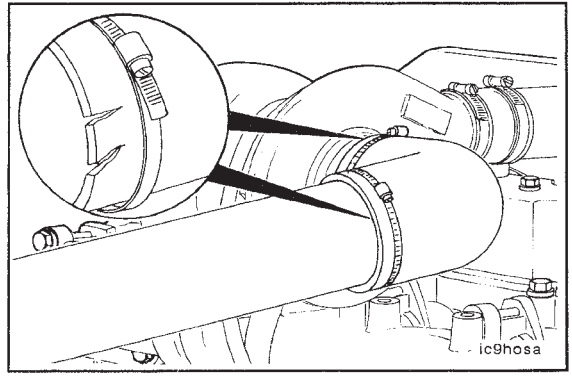

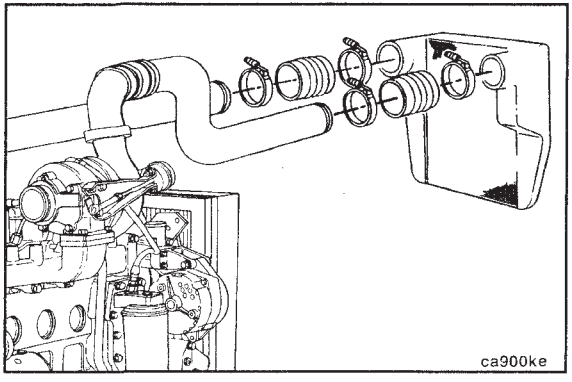

Charge-Air Cooler (CAC)

Inspect for Reuse

If the engine experiences a turbocharger failure or any other occasion where oil or debris is put into the charge air cooler, the charge air cooler **must** be cleaned.

Remove the charge air cooler from the vehicle. Refer to the vehicle manfacturer's instructions.

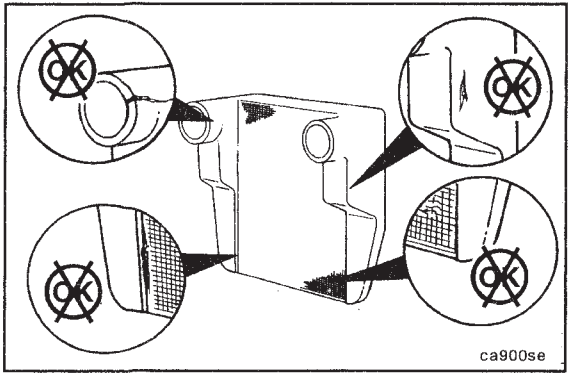

Inspect the charge air cooler for cracks, holes, or damage.

Inspect the tubes, fins, and welds for tears, breaks, or other damage.

Refer to Section A for the leak check procedure.

Clean

⚠ WARNING ⚠

When using solvents, acids, or alkaline materials for cleaning, follow manufacturer's recommendations for use. Wear goggles and protective clothing to avoid personal injury.

⚠ CAUTION ⚠

Do not use caustic cleaners to clean the charge air cooler. Damage to the charge air cooler will result.

Flush the charge air cooler internally with solvent in the opposite direction of normal airflow. Shake the charge air cooler and lightly tap on the end tanks with a rubber mallet to dislodge trapped debris. Continue flushing until all debris or oil is removed.

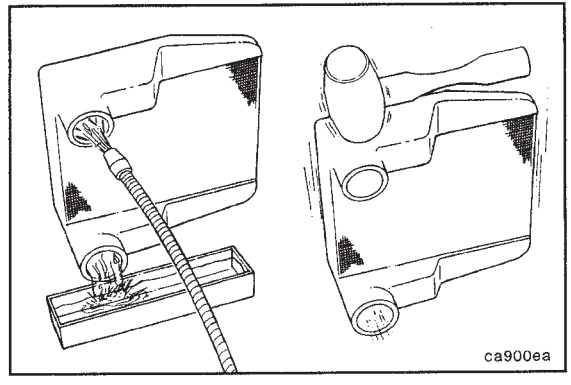

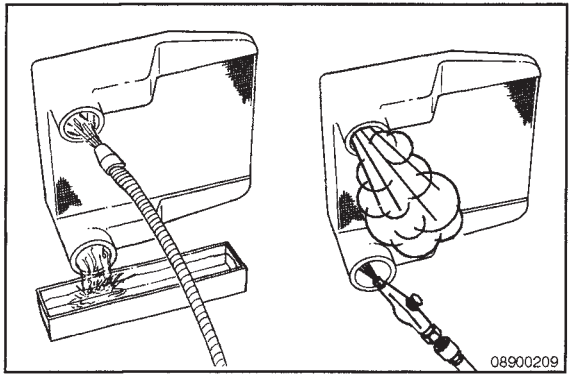

⚠ WARNING ⚠

When using solvents, acids, or alkaline materials for cleaning, follow manufacturer's recommendations for use. Wear goggles and protective clothing to avoid personal injury.

⚠ WARNING ⚠

Wear appropriate eye and face protection when using compressed air. Flying debris and dirt can cause bodily injury.

After the charge air cooler has been thoroughly cleaned of all oil and debris with solvent, wash the charge air cooler internally with hot, soapy water to remove the remaining solvent. Rinse thoroughly with clean water.

Blow compressed air into the charge air cooler in the opposite direction of normal airflow until the charge air cooler is dry internally.

Refer to the vehicle manufacturer's instructions for installation procedures.

Air Cleaner Restriction

Maintenance Check

Maximum intake air restriction is 635 mm [25.0 in] of water for turbocharged engines. Naturally aspirated engines have a maximum restriction of 510 mm [20.0 in] of water.

Turbocharged engines **must** be operated at a rated rpm and full load to check maximum intake air restriction. Replace the air cleaner element when the restriction reaches the maximum allowable limit, or clean according to the manufacturer's recommendations.

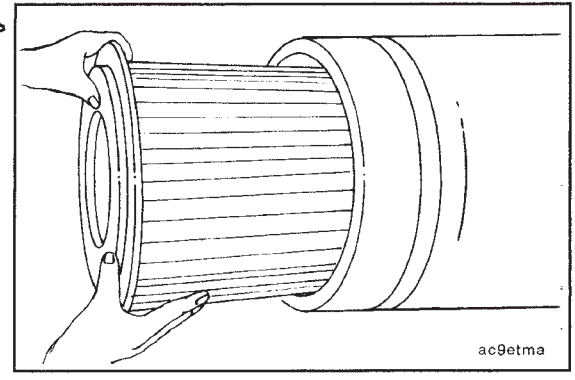

NOTE: Follow the manufacturer's instructions when cleaning or replacing the air cleaner element.

Check the air cleaner service indicator, if equipped. Change the filter element when the red indicator flag (2) is at the raised position in the window (1).

After the air cleaner has been serviced, push the button (3) to reset the service indicator.

NOTE: Never operate the engine without an air cleaner. Intake air **must** be filtered to prevent dirt and debris from entering the engine and causing premature wear.

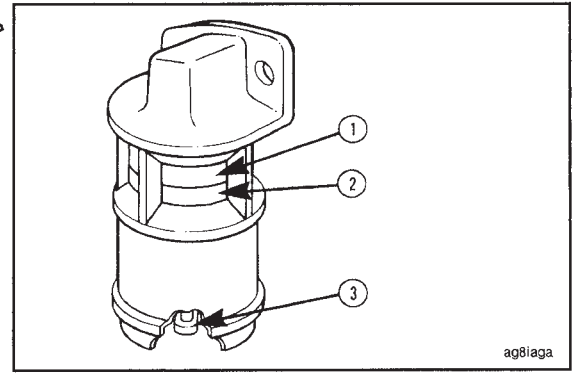

NOTES

Maintenance Procedures at 19,000 Kilometers [12,000 Miles], 500 Hours, or 6 Months

Section Contents

Page

Cooling System 5-9
Maintenance Check 5-9

Fuel Filter (Spin-On Type) 5-2
Install 5-2
Remove 5-2

Fuel Supply Lines 5-4
Vent 5-4

Injector Supply Lines (High Pressure) 5-7
Vent 5-7

Maintenance Procedures - Overview 5-1
General Information 5-1

THIS PAGE LEFT INTENTIONALLY BLANK

Maintenance Procedures - Overview

General Information

All checks or inspections listed under daily or previous maintenance intervals **must** also be performed at this time, in addition to those listed under this maintenance interval.

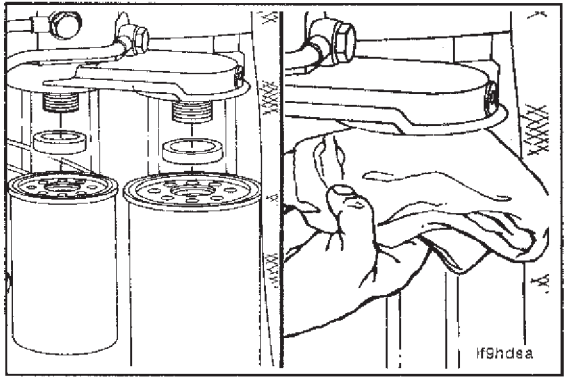

Fuel Filter (Spin-On Type)

Remove

75 to 80 mm and 90 to 95 mm

Clean the area around the fuel filter head. Remove the filters. Clean the gasket surface of the filter head.

Replace the o-ring.

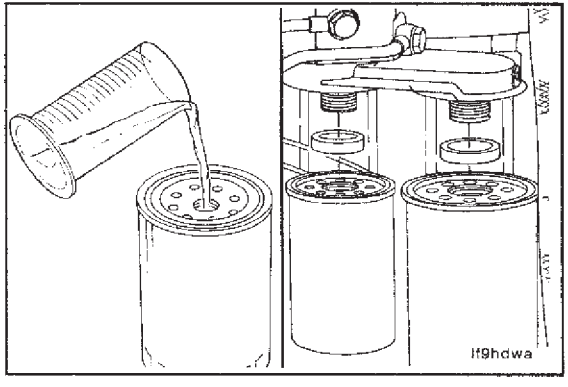

Install

Fill the new filter(s) with clean fuel, and lubricate the o-ring seal with clean lubricating oil.

- Standard filter - used as secondary filter in dual-filter applications
- Fuel-water separator - used as primary filter in dual-filter applications
- Fuel-water separator - used in single-filter applications.

⚠ CAUTION ⚠

Mechanical overtightening will distort threads, filter element seal, or filter can.

Install the filter as specified by the filter manufacturer.

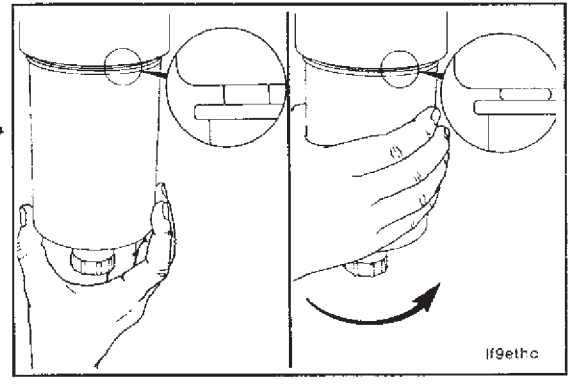

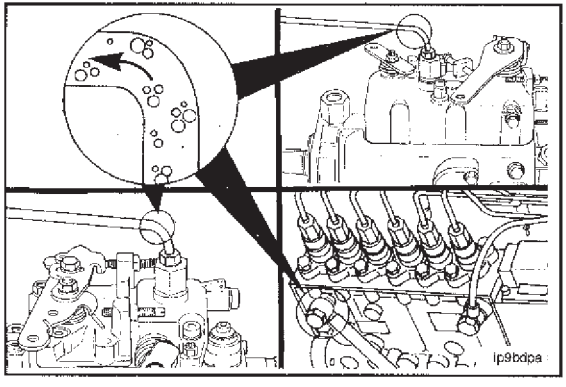

Fuel Supply Lines

Vent

Controlled venting is provided at the injection pump through the fuel drain manifold. Small amounts of air introduced by changing the filters or injection pump supply line will be vented automatically if the fuel filter is changed in accordance with the instructions. No manual bleeding is required.

NOTE: Manual bleeding is required if:

- The fuel filter is **not** filled prior to installation
- Injection pump is replaced
- High-pressure fuel line connections are loosened or lines replaced
- Initial engine start-up or start-up after an extended period of no engine operation
- Vehicle fuel tank has run empty.

Low-Pressure Lines and Fuel Filter(s)

8 mm

Open the vent screw.

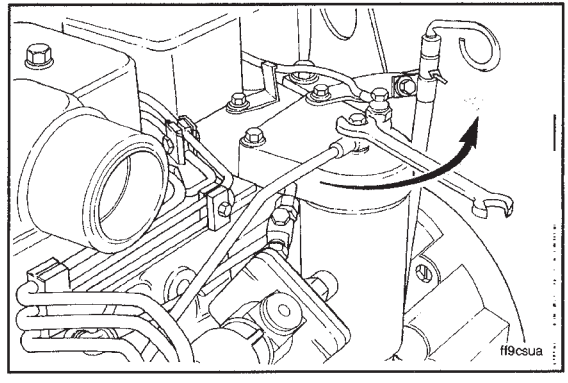

Operate the priming button on the lift pump until the fuel flowing from the fitting is air free.

Tighten the bleed screw.

Torque Value: 9 N•m [80 in-lb]

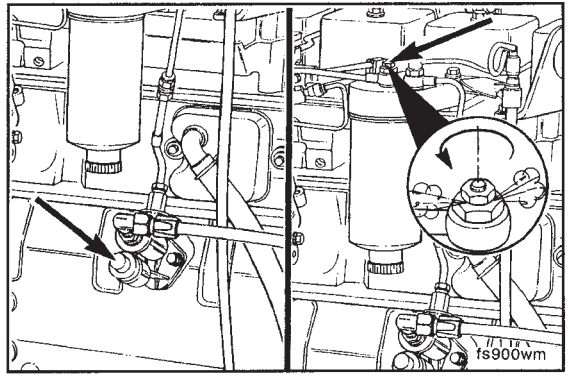

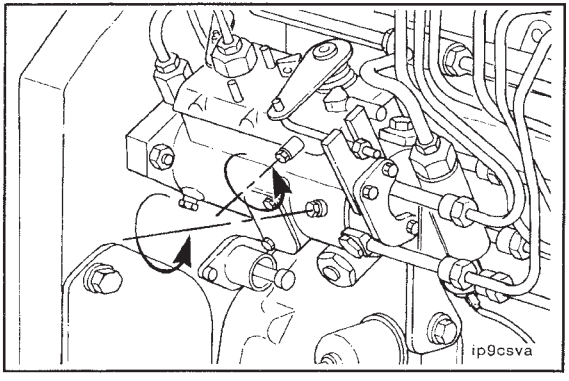

Injection Pump Venting

8 mm

Bleed the Lucas CAV pump at the location shown in the illustration.

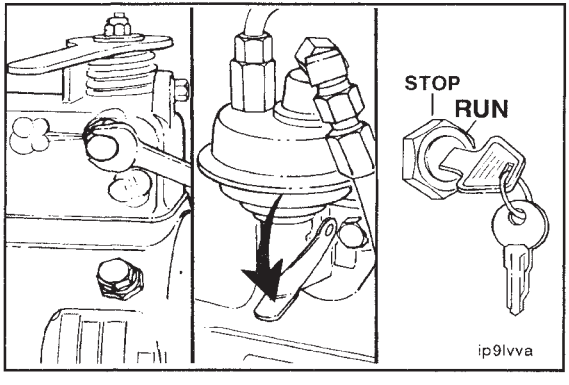

Air/fuel can be pumped from this location with the hand lever on the lift pump if the fuel solenoid valve is energized.

⚠ WARNING ⚠

It is necessary to put the engine in the RUN position. Because the engine can start, be sure to follow all of the safety precautions. Use normal engine starting procedure.

⚠ CAUTION ⚠

When using the starting motor to vent the system, do not engage it for more than 30 seconds at a time: Wait 2 minutes between engagements.

Air can vented from both pumps through the fuel drain manifold line by operating the starting motor.

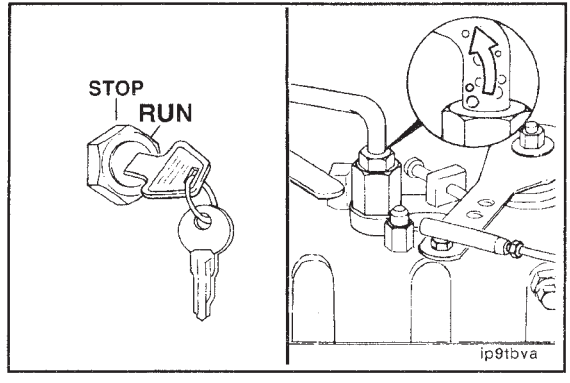

Injector Supply Lines (High Pressure)

Vent

⚠ WARNING ⚠

While testing the injectors, keep hands and body parts away from the injector nozzle. Fuel coming from the injector is under extreme pressure and can cause serious injury by penetrating the skin.

17 mm, 19 mm

Venting is accomplished by loosening one or more fittings at the injectors and cranking the engine to allow entrapped air to bleed from the lines.

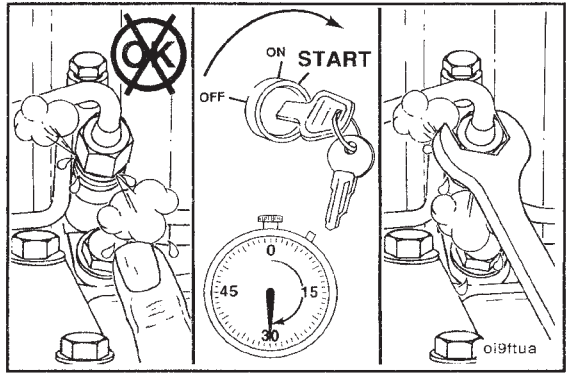

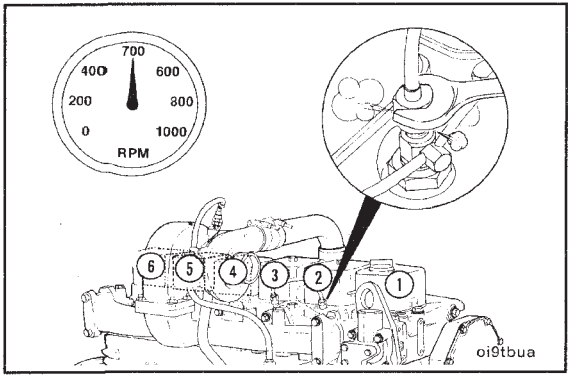

⚠ WARNING ⚠

Do not bleed the fuel system on a hot engine; this can cause fuel to spill onto a hot exhaust manifold, which can cause fire.

Start the engine and vent one line at a time until the engine runs smoothly.

Tighten the line fittings.

Torque Value: 30 N•m [22 ft-lb]

Cooling System

Maintenance Check

⚠ CAUTION ⚠

Overconcentration of antifreeze or use of high-silicate antifreeze can cause damage to the engine.

Refractometer, Part No. C2800

Check the antifreeze concentration. Use a mixture of 50-percent water and 50-percent ethylene glycol or propylene glycol-base antifreeze to protect the engine to -32°C [-25°F] year-around.

The Fleetguard® refractometer, Part No. C2800, provides a reliable, easy-to-read, and accurate measurement of freezing point protection and glycol (antifreeze) concentration.

Antifreeze is essential in every climate.

Use of antifreeze broadens the operating temperature range by lowering the coolant freezing point and by raising its boiling point.

The corrosion inhibitors also protect the cooling system components from corrosion and provide longer component life.

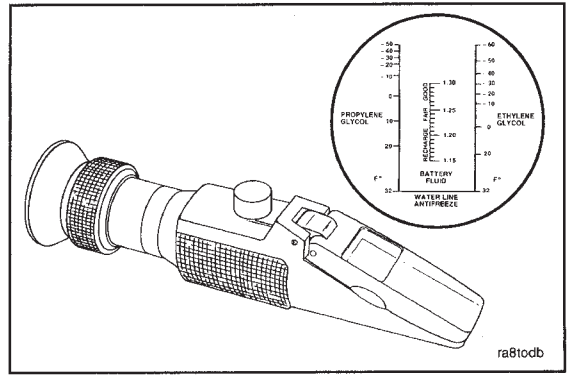

NOTES

Maintenance Procedures at 38,000 Kilometers [24,000 Miles], 1000 Hours, or 1 Year

Section Contents

Page

Drive Belts 6-8
Test 6-8

Maintenance Procedures - Overview 6-1
General Information 6-1

Overhead Set 6-2
Adjust 6-2

THIS PAGE LEFT INTENTIONALLY BLANK

Maintenance Procedures - Overview

General Information

All checks or inspections listed under daily or previous maintenance intervals **must** also be performed at this time, in addition to those listed under this maintenance interval.

The procedures given in this section for valve lash adjustment are to be performed at the initial 38,000 km [24,000 mi] adjustment. Subsequent adjustments are to be performed at 77,000 km [48,000 mi].

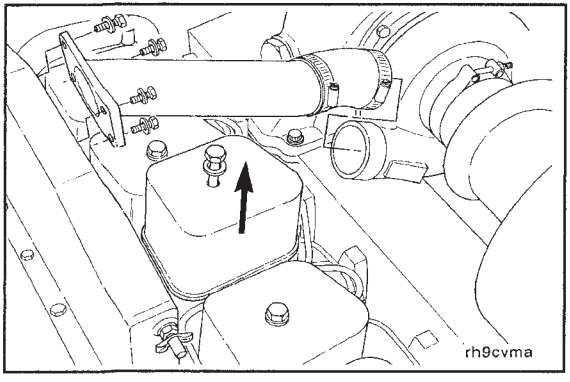

Overhead Set

Adjust

Remove

15 mm

Remove the valve cover.

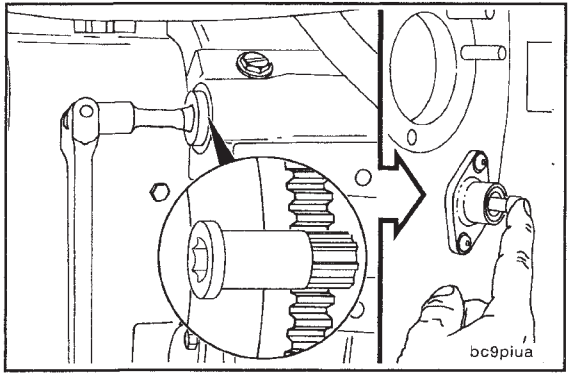

1/2-Inch Drive, Engine Barring Tool, Part No. 3824591

Locate top dead center (TDC) for cylinder No. 1 by barring the crankshaft slowly while pressing on the engine timing pin. Barring the engine is recommended from the flywheel on the rear of the engine.

When the timing pin engages in the hole in the camshaft gear, cylinder No. 1 is at TDC on the compression stroke.

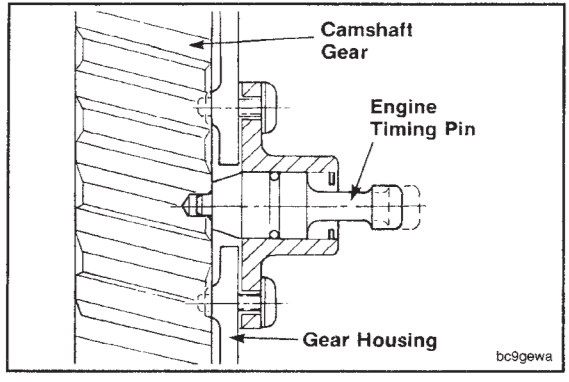

⚠ CAUTION ⚠

To avoid engine or timing pin damage, you must disengage the timing pin after locating top dead center.

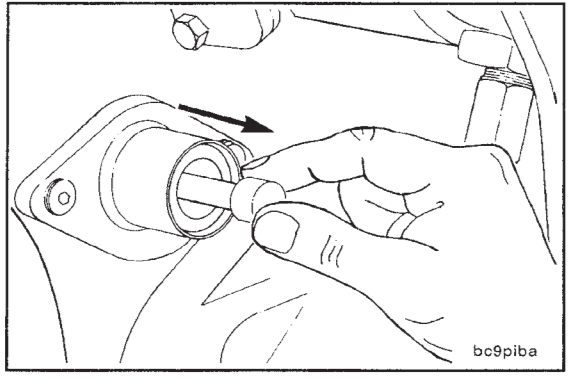

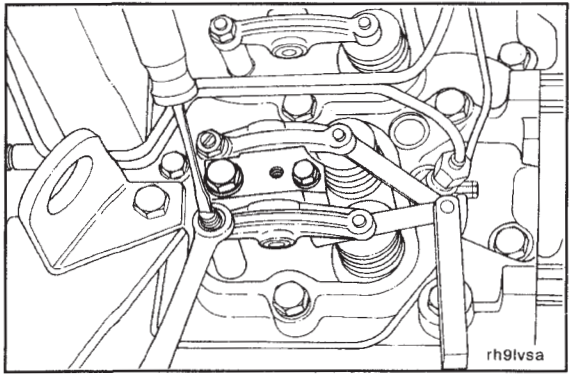

Feeler Gauge

NOTE: The clearance is correct when some resistance is "felt" when the feeler gauge is slipped between the valve stem and the rocker lever.

NOTE: Caution **must** be used when setting the exhaust valve lash on marine cylinder heads with rotators. The top of the valve stem is slightly recessed below the top of the valve rotator.

Intake Clearance: 0.254 mm [0.010 in]

Exhaust Clearance: 0.508 mm [0.020 in]

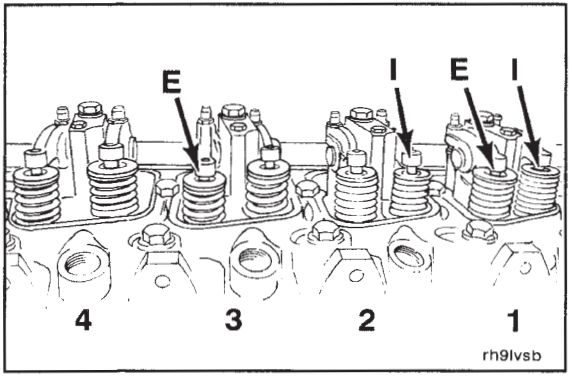

14-mm Wrench, Flat-Blade Screwdriver

Four-Cylinder Engine Adjustment

Locate top dead center (TDC) for cylinder No. 1.

Set **only** valves indicated by the arrows (E = exhaust, I = intake). Do **not** set valves that are **not** indicated.

Holding the locknut steady with the wrench, adjust the valve clearance with the screwdriver or Allen wrench.

Tighten the locknut, and measure the valve lash again.

Torque Value: 24 N•m [18 ft-lb]

⚠ CAUTION ⚠

To avoid engine or pin damage, be sure the timing pin is disengaged.

Mark the vibration damper, and rotate the crankshaft 360 degrees.

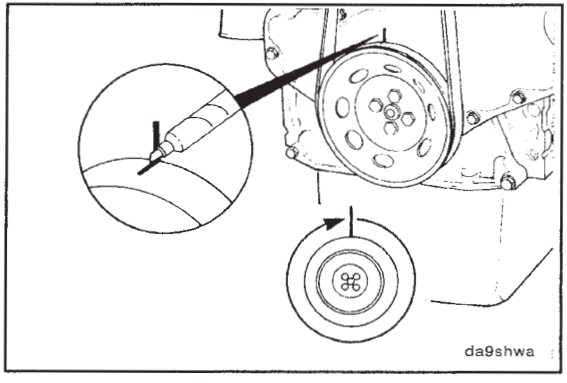

14-mm Wrench, Flat-Blade Screwdriver, or 5-mm Allen Wrench

Adjust the valves as indicated in the illustration.

Torque Value: 24 N•m [18 ft-lb]

Set **only** valves indicated by the arrows (E = exhaust, I = intake). Do **not** set valves that are **not** indicated.

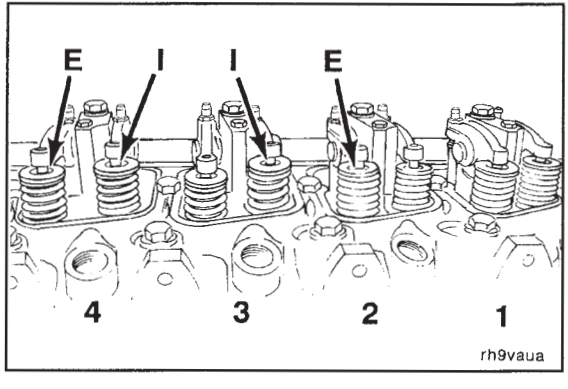

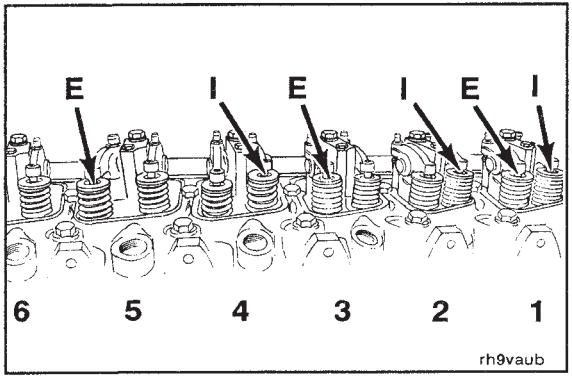

14-mm Wrench, Flat-Blade Screwdriver

Six-Cylinder Engine Valve Adjustment

Locate top dead center (TDC) for cylinder No. 1.

Set **only** the valves indicated by the arrows in the illustration (E = exhaust, I = intake).

Holding the locknut steady with the wrench, adjust the valve clearance with the screwdriver or Allen wrench.

Tighten the locknut, and measure the valve lash again.

Torque Value: 24 N•m [18 ft-lb]

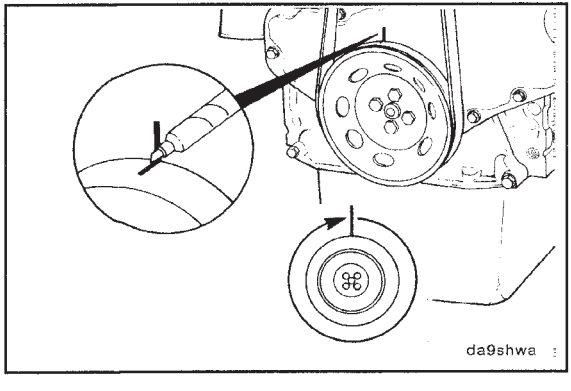

⚠ CAUTION ⚠

To avoid engine or pin damage, be sure timing pin is disengaged.

Mark the pulley, and rotate the crankshaft 360 degrees.

Adjust the valves as indicated in the illustration.

Set **only** the valves indicated by the arrows in the illustration (E = exhaust, I = intake). Do **not** set valves that are **not** indicated.

Torque Value: 24 N•m [18 ft-lb]

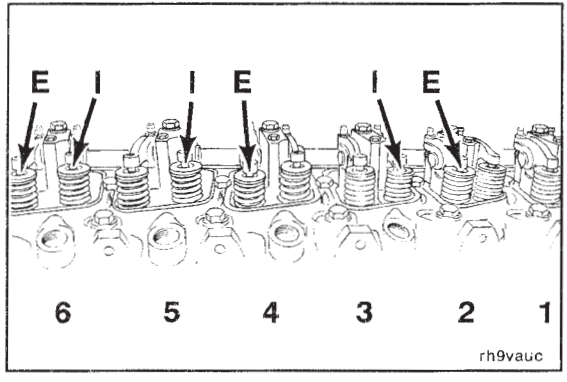

15 mm

Install the rocker lever covers, and tighten the capscrews.

Torque Value: 24 N•m [18 ft-lb]

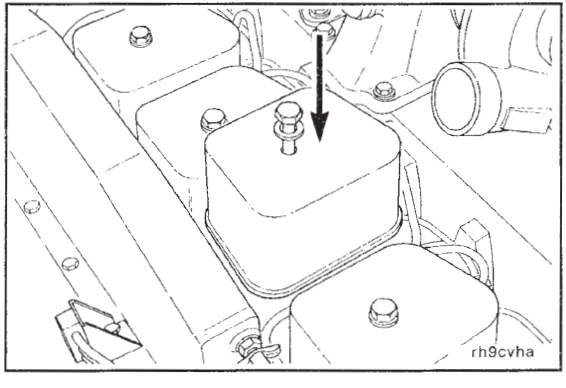

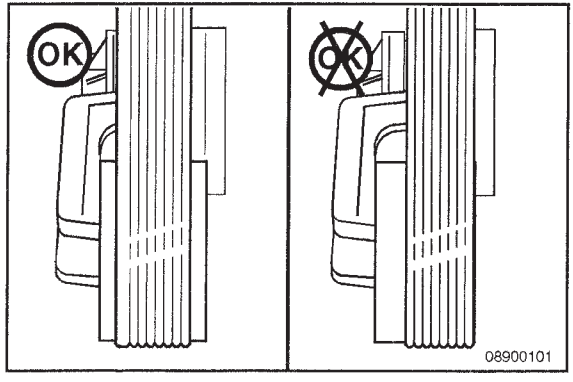

Drive Belts

Test

Drive Belt and Tensioner Inspection

Check the location of the drive belt on the belt tensioner pulley. The belt **must** be centered on, or centered close to the middle of, the pulley. Belts aligned, either too far forward or backward, can cause belt wear, belt roll-off failures, or increase uneven tensioner wear.

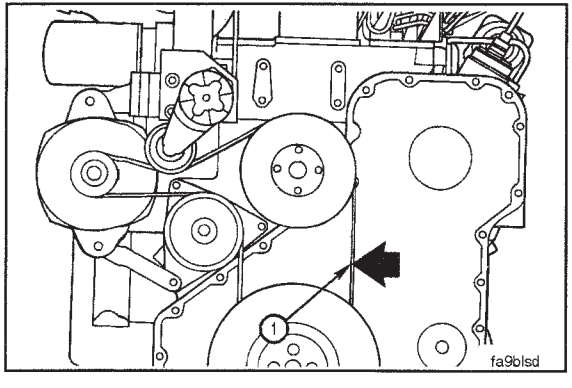

Check the belt deflection at the longest span of the belt. The deflection **must** be checked at the center (1) of the span. The maximum deflection allowed in the belt is 9.5 to 12.7 mm [3/8 to 1/2 in].

Belt Tensioner Gauge, Part No. ST-1293

Use the Cummins belt tensioner gauge, Part No. ST-1293, to measure the tension in the drive belt.

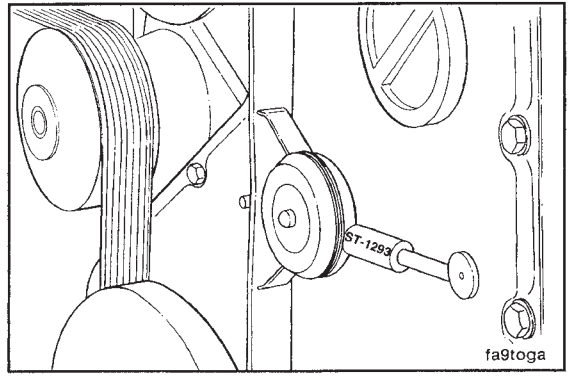

Check the tensioner arm, pulley, and stops for cracks. If any cracks are noticed, the tensioner **must** be replaced.

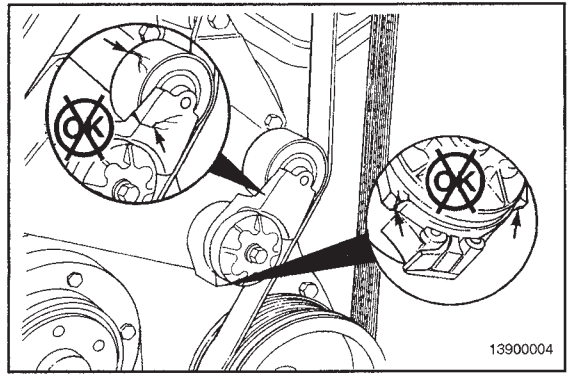

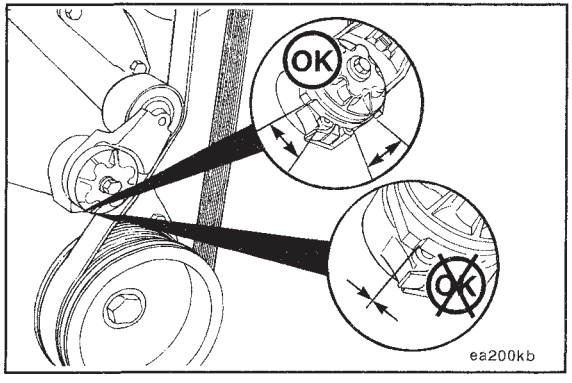

With the belt on, verify that neither tensioner arm stops are in contact with the spring casing stop. If either stop is touching, the drive belt **must** be replaced.

After replacing the belt, if the tensioner arm stops are still in contact with the spring casing stop, replace the tensioner.

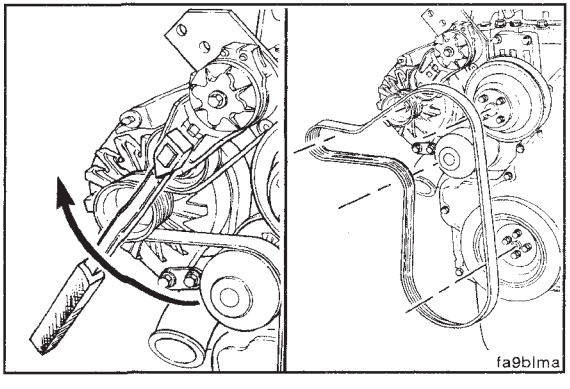

3/8-Inch Breaker Bar, Extension

Remove the drive belt, and check torque of the tensioner capscrew.

Torque Value: 43 N•m [32 ft-lb]

After checking the torque, use a 3/8-inch breaker bar with an extension to rotate the tensioner slowly away from the area of belt contact. If the arm rotates with any roughness or hesitancy, replace the tensioner.

Check the belt for damage. Transverse (across the belt width) cracks are acceptable. Longitudinal (direction of the belt length) cracks that intersect with transverse cracks are **not** acceptable. If the belt is frayed or has any piece of material missing, the belt is unacceptable and needs to be replaced.

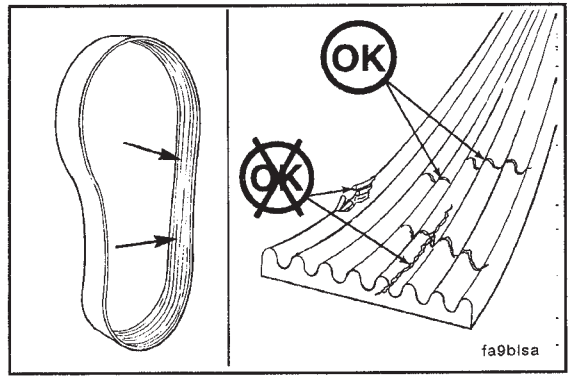

With the belt removed, verify that the tensioner arm stop is in contact with the spring case stop. If these two are **not** touching, the tensioner **must** be replaced.

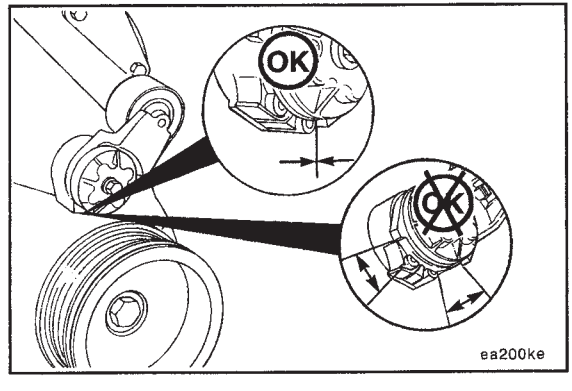

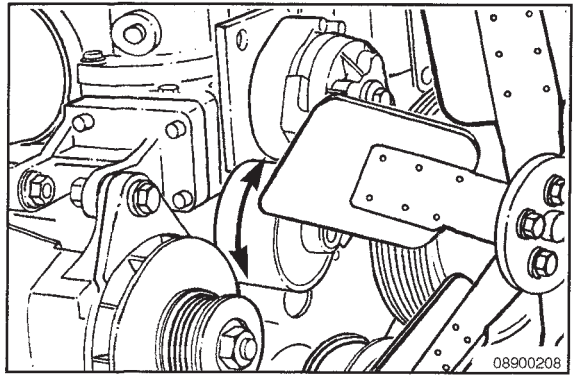

With the drive belt removed, check to be sure that the tensioner pulley rotates freely.

Measure the clearance between the tensioner spring case and the tensioner arm to verify wear-out and uneven bearing wear. If the clearance exceeds 3 mm [0.12 in] at any point, the tensioner has failed and **must** be replaced as a complete assembly. Experience has revealed that tensioners generally will show a larger clearance gap near the lower portion of the spring case, resulting in the upper portion rubbing against the tensioner arm. **Always** replace the belt when the tensioner is replaced.

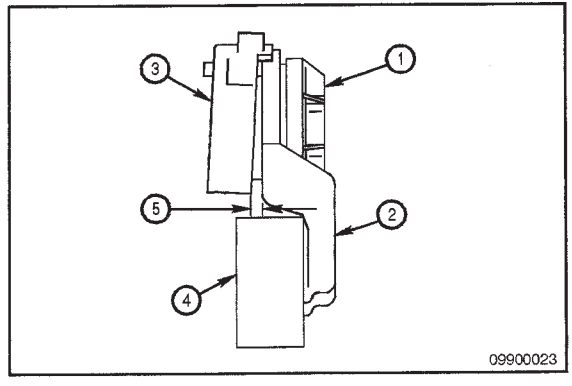

Below is a breakdown of the tensioner.

1. Tensioner cap
2. Tensioner arm
3. Spring case
4. Tensioner pulley
5. Clearance gap.

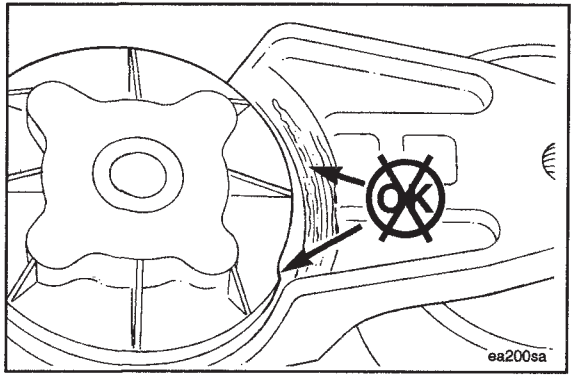

Inspect the tensioner for evidence of the tensioner arm contacting the tensioner cap. If there is evidence of the two areas making contact, the pivot tube bushing has failed and the tensioner **must** be replaced.

Maintenance Procedures at 77,000 Kilometers [48,000 Miles], 2000 Hours, or 2 Years

Section Contents

Page

Air Compressor 7-9
Inspect 7-9

Cooling System 7-2
Drain 7-2
Fill 7-6
Flush 7-4

Maintenance Procedures - Overview 7-1
General Information 7-1

Vibration Damper 7-8
Inspect 7-8

THIS PAGE LEFT INTENTIONALLY BLANK

Maintenance Procedures - Overview

General Information

All checks or inspections listed under daily or previous maintenance intervals **must** also be performed at this time, in addition to those listed under this maintenance interval.

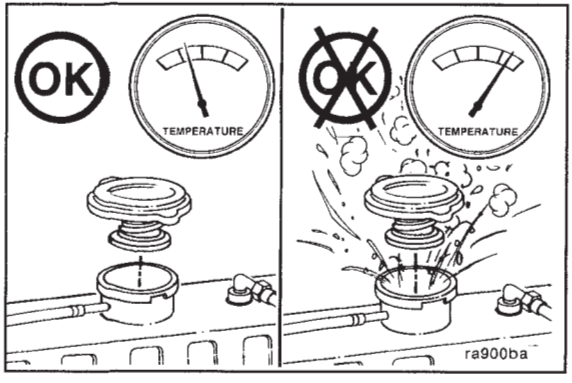

Cooling System

Drain

⚠ WARNING ⚠

Avoid prolonged and repeated skin contact with used antifreeze. Such prolonged, repeated contact can cause skin disorders or other bodily injury. Keep out of reach of children.

△ CAUTION △

Protect the environment: Handling and disposing of used antifreeze is subject to federal, state, and local regulations. Use authorized waste disposal facilities, including civic amenity sites and garages providing authorized facilities for the receipt of used antifreeze. If in doubt, contact your local authorities of the EPA for guidance as to proper handling of used antifreeze.

⚠ WARNING ⚠

Do not remove the pressure cap from a hot engine. Wait until the coolant temperature is below 50°C [122°F] before removing the pressure cap. Heated coolant spray or steam can cause personal injury.

⚠ WARNING ⚠

Coolant is toxic. Keep away from children and pets. If not reused, dispose of in accordance with local environmental regulations.

Drain the cooling system by opening the drain valve on the radiator and removing the plug in the bottom of the water inlet. A drain pan with a capacity of 19 liters [5 gal] will be adequate in most applications.

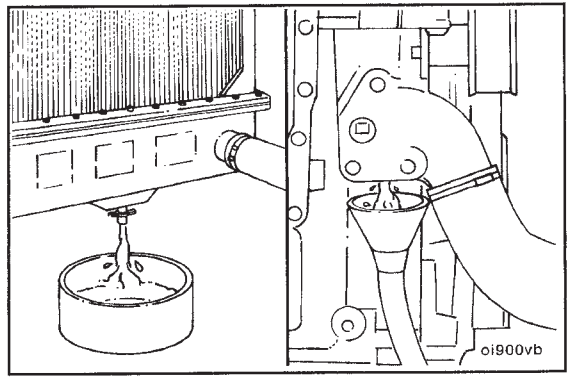

Check for damaged hoses and loose or damaged hose clamps. Replace as required. Check the radiator for leaks, damage, and buildup of dirt. Clean and replace as required.

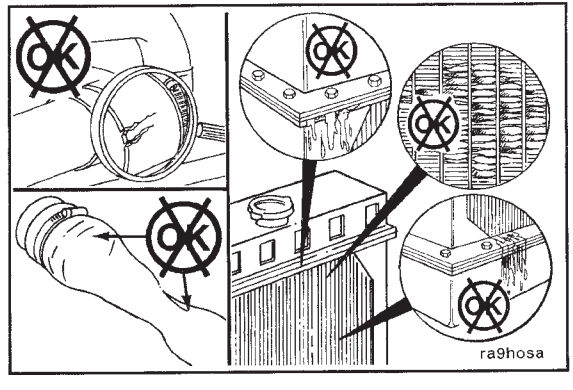

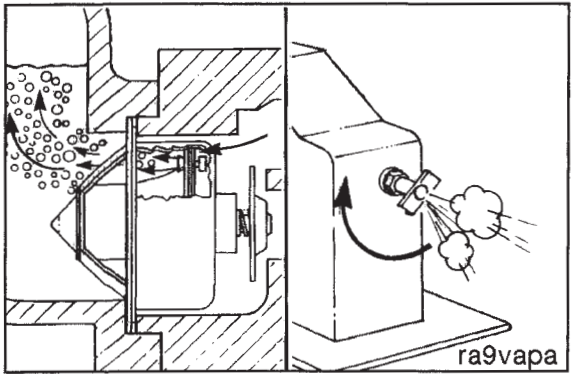

Flush

△ CAUTION △

During filling, air must be vented from the engine coolant passages. The air vents through the "jiggle pin" openings to the top radiator hose and out the fill opening. Additional venting is provided for engines equipped with an aftercooler. Open petcock during filling.

NOTE: Adequate venting is provided for a fill rate of 19 liters [5 gal] per minute.

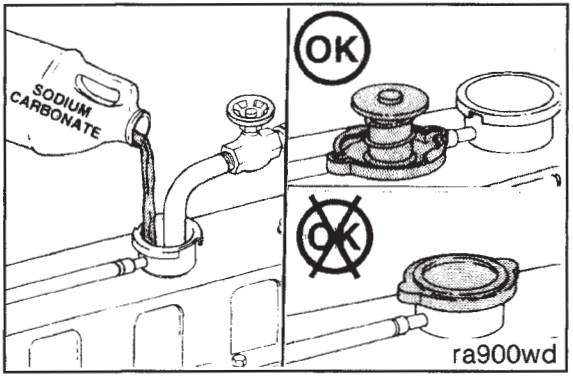

△ CAUTION △

Do not install the radiator cap. The engine is to be operated without the cap for this process.

Fill the system with a mixture of sodium carbonate and water (or commercially available equivalent).

NOTE: Use 0.5 kg [1.0 lb] of sodium carbonate for every 23 liters [6.0 gal] of water.

⚠ WARNING ⚠

Coolant is toxic. Keep away from children and pets. If not reused, dispose of in accordance with local environmental regulations.

Operate the engine for 5 minutes with the coolant reaching the temperature of above 80°C [176°F].

Shut the engine off and drain the cooling system.

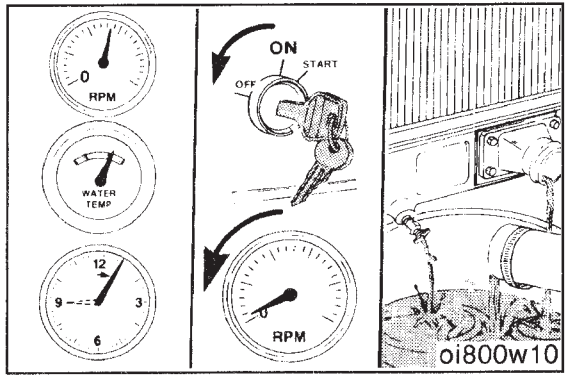

Fill the cooling system with clean water.

NOTE: Be sure to vent the engine and aftercooler for complete filling.

NOTE: Do **not** install the radiator cap or the new coolant filter.

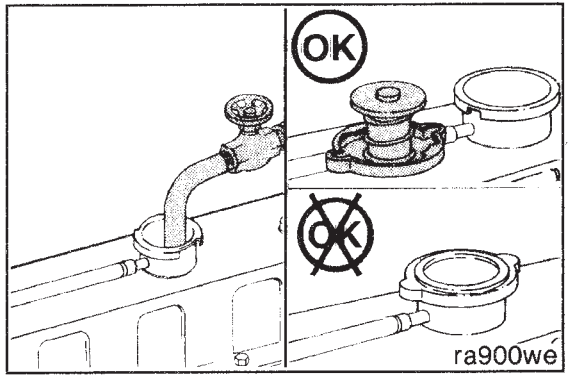

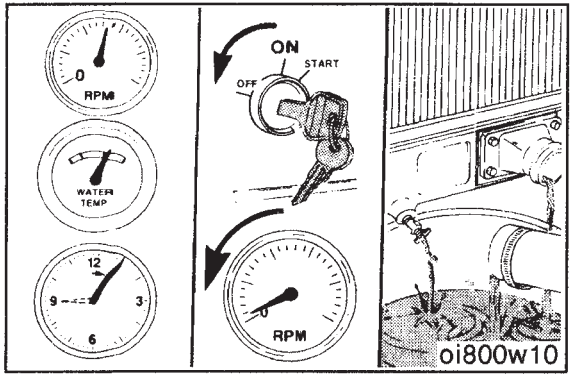

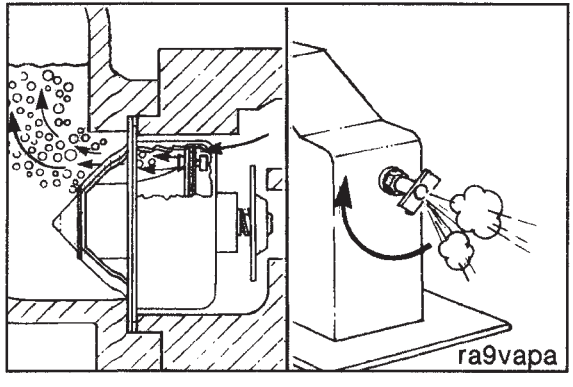

⚠ WARNING ⚠

Coolant is toxic. Keep away from children and pets. If not reused, dispose of in accordance with local environmental regulations.

Operate the engine for 5 minutes with the coolant reaching the temperature of above 80°C [176°F].

Shut the engine off and drain the cooling system.

NOTE: If the water being drained is still dirty, the system **must** be flushed again until the water is clean.

Fill

△ CAUTION △

The system must be filled properly to prevent air locks. During filling, air must be vented from the engine coolant passages. Be sure to open the petcock on the aftercooler for aftercooled engines. Wait 2 to 3 minutes to allow air to be vented; then add mixture to bring level to the top.

NOTE: The system has a design fill rate of 19 liters [5 gal] per minute.

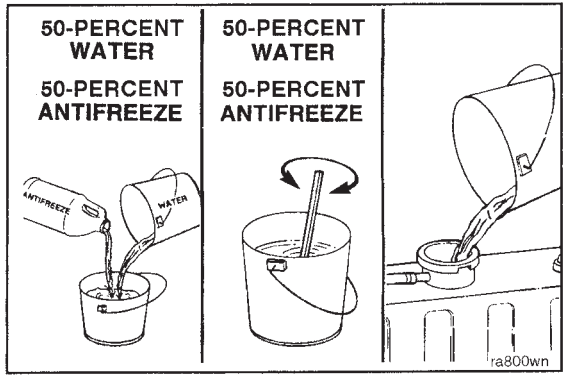

⚠ CAUTION ⚠

Never use water alone for coolant. Damage from corrosion can be the result of using water alone for coolant.

Use a mixture of 50-percent water and 50-percent ethylene glycol antifreeze to fill the cooling system.

Coolant Capacity (engine only)			
	liters		U.S.gal
4B3.9, 4BT3.9	7	MAX	1.85
4BTA3.9*	7.9	MAX	2.1
6B5.9, 6BT5.9	9	MAX	2.38
6BTA5.9*	9.9	MAX	2.61

* Jacket-water aftercoolers are used on the 4BTA and 6BTA engines. If a charge air cooler is used, the coolant capacity is the same as the naturally aspirated or turbocharged-**only** engines.

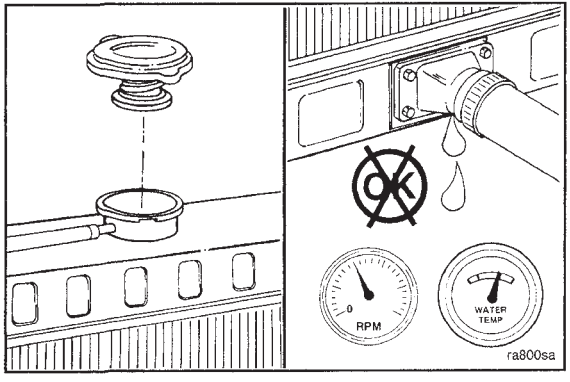

⚠ WARNING ⚠

Do not remove the pressure cap from a hot engine. Wait until the coolant temperature is below 50°C [122°F]. Failure to do so can cause personal injury from heated coolant.

Install the pressure cap. Operate the engine until it reaches a temperature of 80°C [180°F], and check for coolant leaks.

Check the coolant level again to make sure system is full of coolant, or that the coolant level has risen to the hot level in the recovery bottle on the system, if equipped.

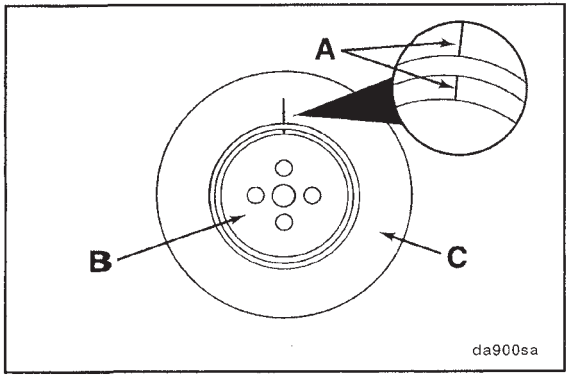

Vibration Damper

Inspect

Check the index lines (A) on the damper hub (B) and the inertia member (C). If the lines are more than 1.59 mm [1/16 in] out of alignment, replace the damper.

Inspect the rubber member for deterioration. If pieces of rubber are missing or if the elastic member is more than 3.18 mm [1/8 in] below the metal surface, replace the damper.

NOTE: Also, look for forward movement of the damper ring on the hub. Replace the damper if any movement is detected.

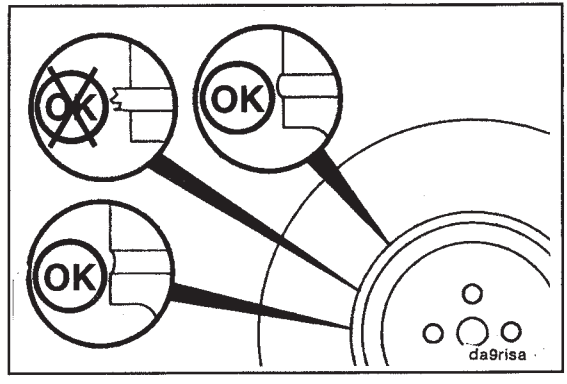

Air Compressor

Inspect

NOTE: All air compressors have a small amount of lubricating oil carryover that lubricates the piston rings and moving parts. When this lubricating oil is exposed to normal air compressor operating temperatures over time, the lubricating oil will form varnish or carbon deposits. If the following inspections are **not** done, the air compressor piston rings will be affected by high operating temperatures and pressures and will **not** seal correctly.

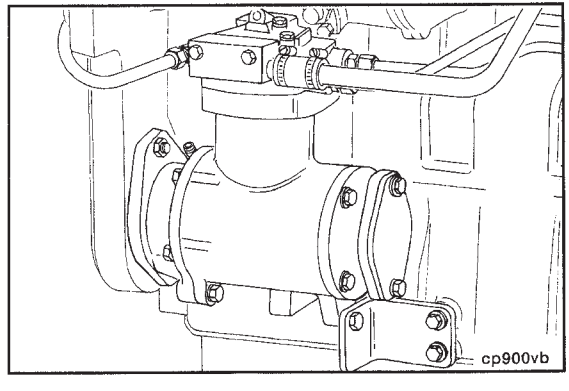

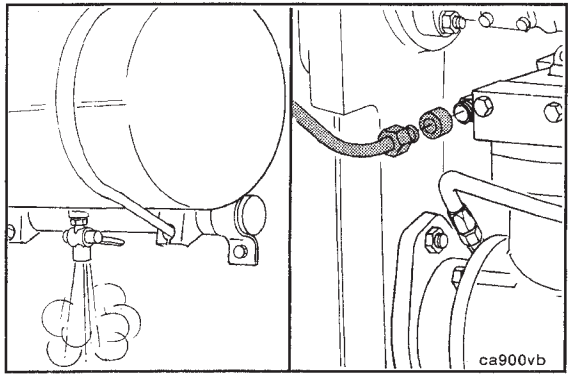

Air Compressor Discharge Inspection

Drain the air system wet tank to release the system air pressure. Remove the air discharge line from the air compressor.

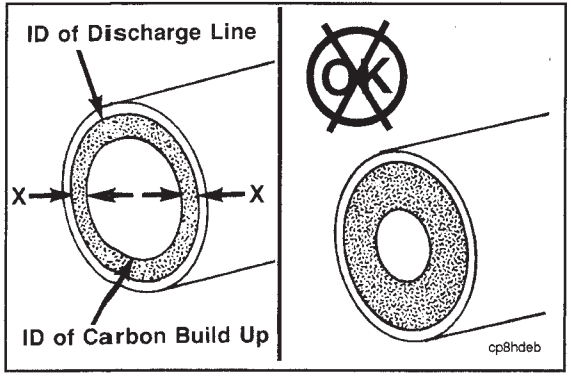

Measure the total carbon deposit thickness inside the air discharge line as shown. If the total carbon deposit (X + X) exceeds 2 mm [1/16 in], clean and inspect the cylinder head, the valve assembly, and the discharge line. Replace if necessary. Contact the Cummins Authorized Repair Location for procedures.

If the total carbon deposit exceeds specifications, continue checking the air discharge line connections up to the first tank until total carbon deposit is less than 2 mm [1/16 in]. Clean or replace any lines or connections that exceed this specification.

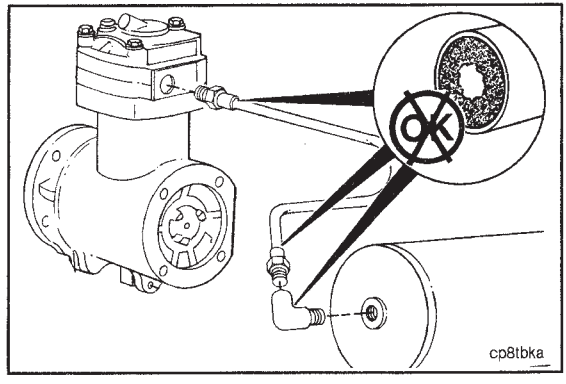

Inspect any air driers, splitter valves, pressure relief valves, and alcohol injectors for carbon deposits or malfunctioning parts. Inspect for air leaks. Maintain and repair the parts according to the manufacturer's specifications.

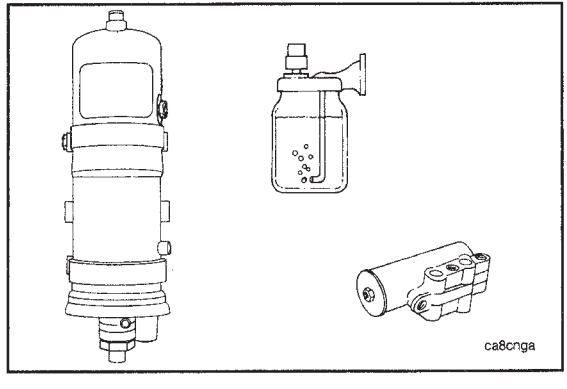

NOTES

Section A - Adjustment, Repair, and Replacement

Section Contents

	Page
Aftercooler	A-76
Clean	A-78
Fill	A-79
Install	A-78
Preparatory	A-76
Remove	A-76
Air Crossover	A-75
Install	A-75
Remove	A-75
Air Intake Manifold	A-81
Clean	A-82
Install	A-83
Preparatory	A-81
Pressure Test	A-85
Remove	A-82
Temperature Differential Test	A-85
Vent	A-84
Air Intake System - Overview	A-74
General Information	A-74
Alternator	A-112
Install	A-113
Remove	A-112
Belt Tensioner, Automatic	A-4

Page

Install A-5
Remove A-4

Charge-Air Cooler (CAC) A-80
Leak Test A-80
Pressure Test A-81

Cold Start Timing Advance System (KSB) Temperature Switch A-45
Install A-45
Remove A-45

Coolant Thermostat A-11
Clean A-13
Fill A-16
Install A-14
Preparatory A-11
Remove A-12

Cooling System A-2
General Information A-2

Drive Belt, Cooling Fan A-3
Install A-3
Remove A-3

Electrical Equipment - Overview A-109
General Information A-109

Exhaust Manifold, Dry A-96
Clean A-97
Install A-98
Preparatory A-96
Remove A-97

Page

Fan Spacer and Pulley A-5
Install A-6
Remove A-5

Fuel Filter Adapter A-22
Preparatory A-22
Remove A-23

Fuel Injection Pump, Rotary A-46
Install A-51
Preparatory A-46
Remove A-47

Fuel Injection Pumps, In-Line A-60
Install A-63
Preparatory A-60
Remove A-60

Fuel Lift Pump A-23
Clean A-24
Install A-25
Preparatory A-23

Fuel Manifold (Drain) A-31
Install A-34
Preparatory A-31
Remove A-31

Fuel Pump A-73
Adjust A-73

Fuel Shutoff Valve A-41
Clean A-42

Page

Install A-43
Preparatory A-41
Remove A-42

Fuel Supply Lines A-18
Install A-19
Preparatory A-18
Remove A-18

Fuel System - Overview A-17
General Information A-17

Injector A-36
Clean A-37
Install A-37
Preparatory A-36
Remove A-36

Injector Supply Lines (High Pressure) A-26
Install A-29
Preparatory A-26
Remove A-26

Lubricating Oil Cooler A-103
Clean A-104
Fill A-108
Install A-106
Preparatory A-103
Pressure Test A-106
Remove A-104

Lubricating Oil Pressure Regulator (Main Rifle) A-100
Clean A-101

Page

Install A-102
Preparatory A-100
Remove A-100

Lubricating Oil System - Overview A-99
General Information A-99

Starting Motor A-110
Install A-111
Remove A-110

Tool Requirements A-1
General Information A-1

Turbocharger A-86
Clean A-89
Install A-89
Preparatory A-86
Remove A-87
Test A-96

Water Pump A-7
Clean A-9
Install A-10
Preparatory A-7
Remove A-8

THIS PAGE LEFT INTENTIONALLY BLANK

Tool Requirements

General Information

Tool Requirements

Repair Tools Required

Sockets	Wrenches	Other
10 mm	8 mm	Allen wrench (8 mm)
12 mm	10 mm	Breaker bar (1/2-in sq. drive)
13 mm	13 mm	Flat screwdriver
15 mm	15 mm	Ratchet (3/8-in sq. drive)
17 mm	17 mm (open end)	Ratchet (1/2-in sq. drive)
18 mm	19 mm	Filter wrenches (75 to 80 mm and 90 to 95 mm)
19 mm	22 mm	Drill motor (1/4-in)
22 mm	24 mm	Drill bit (3 mm)
27 mm		Slide hammer
		Flat chisel
		T-bar puller (75 mm)
		Sheet metal screw (No. 10)
		Torque wrench
		Pliers
		Engine barring gear, Part No.3824591

Cooling System

General Information

⚠ WARNING ⚠

Coolant is toxic. Keep away from children and pets. If not reused, dispose of in accordance with local environmental regulations.

⚠ WARNING ⚠

Do not remove the pressure cap from a hot engine. Wait until the coolant temperature is below 50°C [122°F] before removing the pressure cap. Heated coolant spray or steam can cause personal injury.

Components to Be Replaced	Tools	Preparatory Steps
Drive belt	Breaker bar (3/8-in sq. drive)	
Belt tensioner	Ratchet (3/8-in sq. drive), 13-mm socket, and torque wrench	Remove drive belt
Fan hub	13-mm socket/wrench	Remove drive belt and fan pulley
Water pump	10-mm socket/wrench	Drain coolant and remove drive belt
Thermostat	10-mm, 18-mm, and 19-mm socket/wrench	Drain coolant, remove drive belt, loosen alternator link, remove alternator mounting capscrew, remove thermostat housing

Drive Belt, Cooling Fan

Remove

3/8-Inch Square Drive

Lift the tensioner to remove the drive belt.

NOTE: The belt tensioner is spring-loaded and **must** be pivoted away from the drive belt. Pivoting in the wrong direction can result in damage to the belt tensioner.

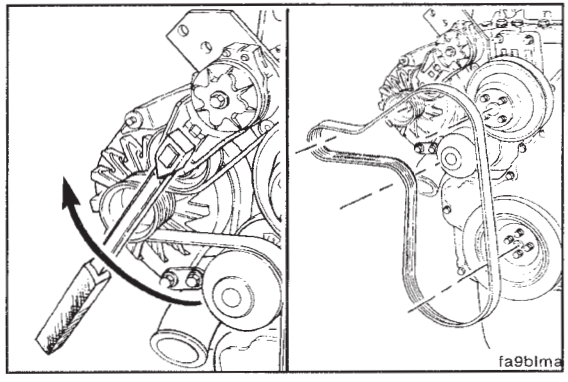

Install

⚠ CAUTION ⚠

Applying excessive force in the opposite direction of windup or after the tensioner has been wound up to the positive stop can cause the tensioner arm to break.

3/8-Inch Square Drive

Lift and hold the belt tensioner. Install the drive belt; release the tensioner.

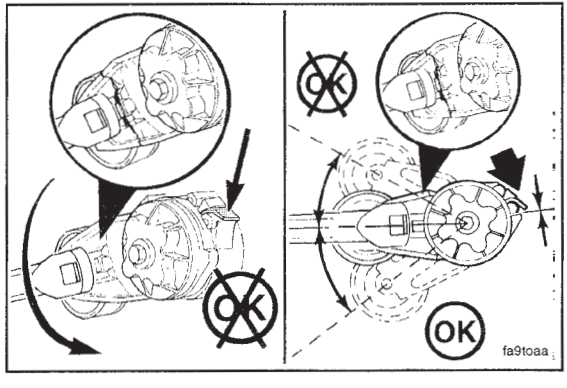

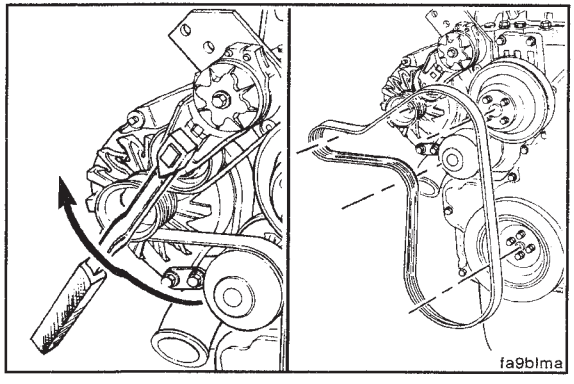

Belt Tensioner, Automatic

Remove

3/8-Inch Square Drive

Lift belt tensioner to relieve tension in the belt, and remove the belt.

NOTE: The belt tensioner is spring-loaded and **must** be pivoted away from the drive belt. Pivoting in the wrong direction can result in damage to the belt tensioner.

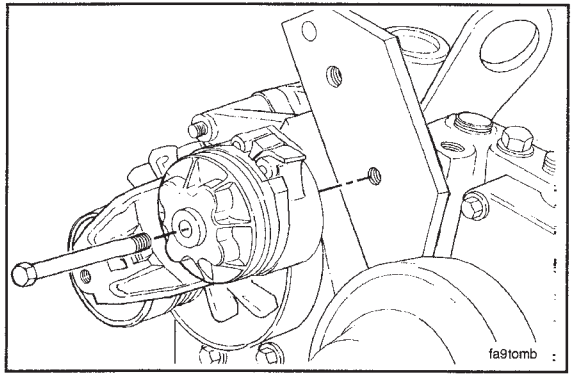

13 mm

Remove the belt tensioner.

Install

3/8-Inch Square Drive, 15-mm Wrench

Install the belt tensioner and tighten the capscrew.

Torque Value: 43 N•m [32 ft-lb]

Lift and hold the tensioner. Install the drive belt and release the tensioner.

Service Tip: If difficulty is experienced installing the drive belt; for example, the belt seems too short; position the belt over the grooved pulleys first; then, while holding the tensioner up, slide the belt over the water pump pulley.

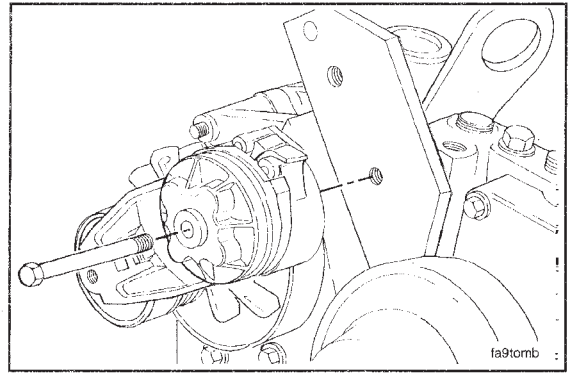

Fan Spacer and Pulley

Remove

3/8-Inch Square Drive

Lift belt tensioner to relieve tension in the belt, and remove the belt.

NOTE: The belt tensioner is spring-loaded and **must** be pivoted away from the drive belt. Pivoting in the wrong direction can result in damage to the belt tensioner.

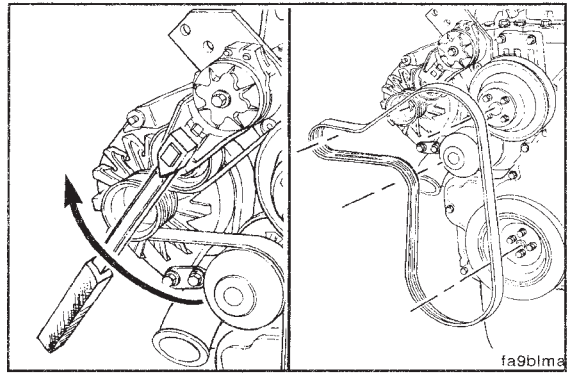

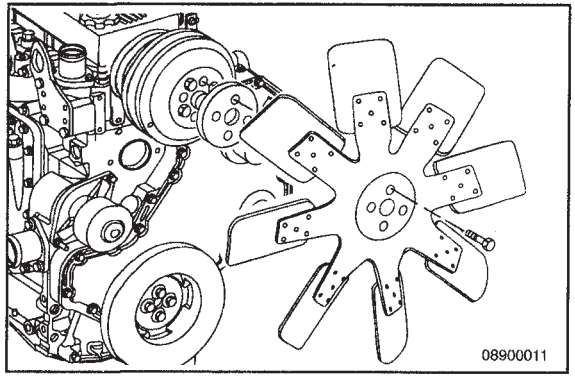

13 mm

Remove the four capscrews, fan, and spacer.

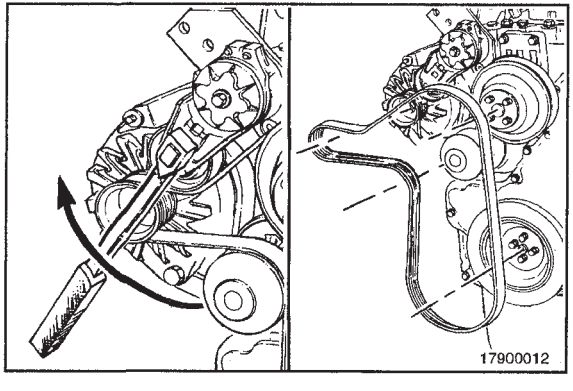

Install

3/8-Inch Square Drive

Lift the tensioner, and install the belt.

Service Tip: If difficulty is experienced installing the drive belt (the belt seems too short), position the belt over the grooved pulleys first; then, while holding the tensioner up, slide the belt over the water pump pulley.

10 mm, 13 mm

Install the four capscrews, fan, and spacer.

10-mm Wrench

Torque Value: 24 N•m [18 ft-lb]

13-mm Wrench

Torque Value: 43 N•m [32 ft-lb]

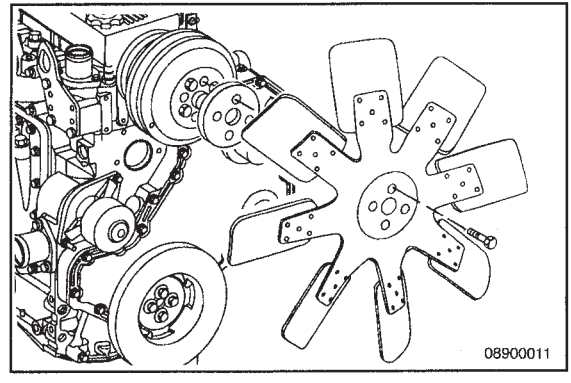

Water Pump

Preparatory

⚠ WARNING ⚠

Coolant is toxic. Keep away from children and pets. If not reused, dispose of in accordance with local environmental regulations.

Drain the coolant.

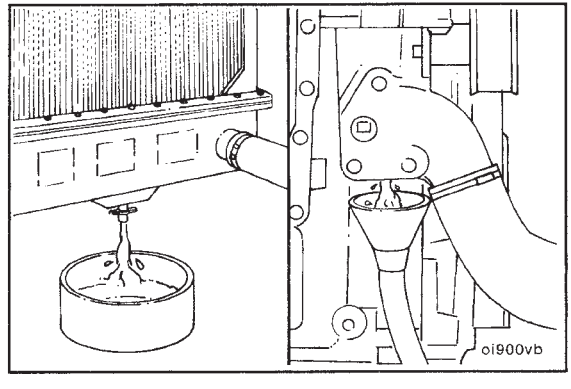

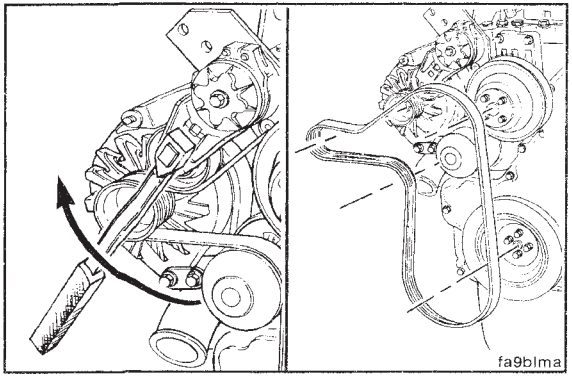

Remove

Remove the drive belt.

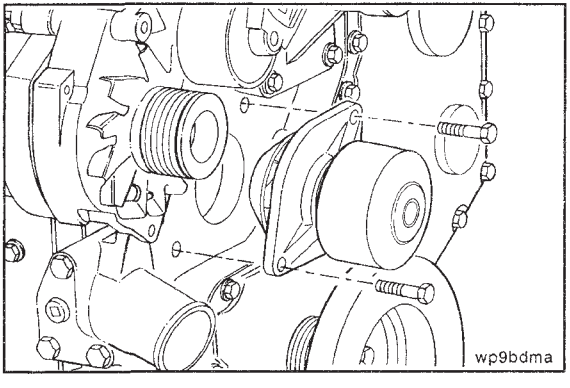

13 mm

Remove the two capscrews and water pump.

Clean

Clean the sealing surface on the cylinder block.

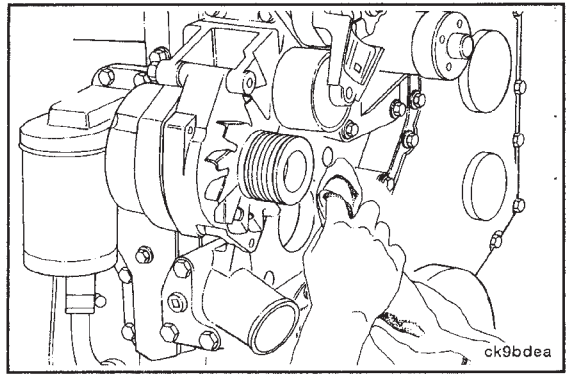

Clean o-ring sealing surface on the water pump housing.

Install the o-ring onto the water pump housing.

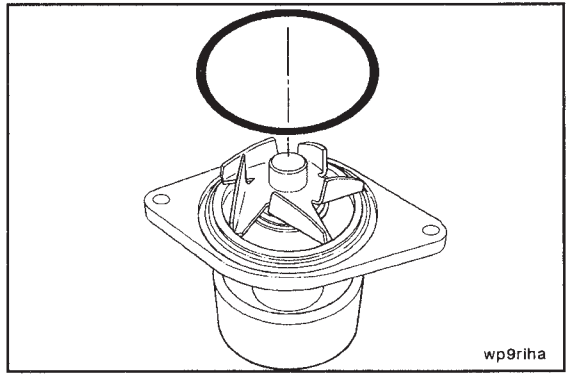

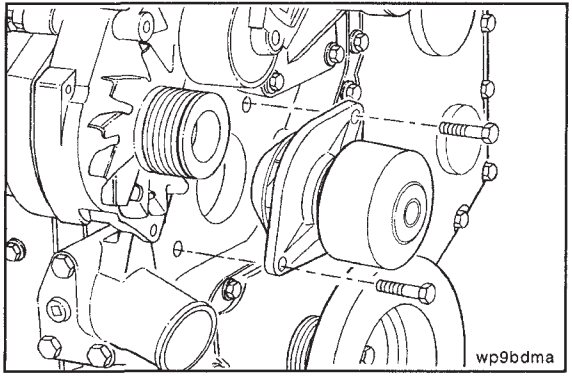

Install

10 mm

Install the water pump.

Torque Value: 24 N•m [18 ft-lb]

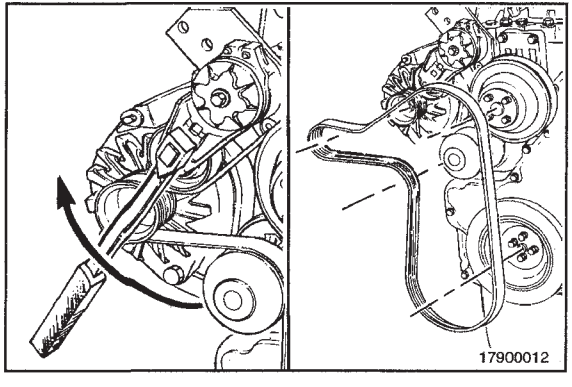

3/8-Inch Square Drive

Lift the tensioner and install the belt.

Service Tip: If difficulty is experienced installing drive belt, such as the belt seems too short, position the belt over the grooved pulleys first: then, while holding the tensioner up, slide the belt over the water pump pulley.

Coolant Thermostat

Preparatory

⚠ WARNING ⚠

Batteries can emit explosive gases. To avoid personal injury, always ventilate the compartment before servicing the batteries. To avoid arcing, remove the negative (-) battery cable first and attach the negative (-) battery cable last.

⚠ WARNING ⚠

Coolant is toxic. Keep away from children and pets. If not reused, dispose of in accordance with local environmental regulations.

- Disconnect the negative (-) battery cable.
- Drain 2 liters [2.1qt] of coolant.
- Remove the radiator hose from the outlet connection.
- Remove the drive belt.

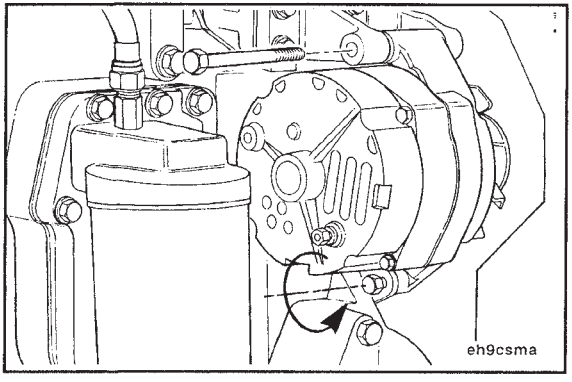

Remove

14 mm, 16 mm

Loosen the lower alternator link capscrew.

Remove the upper alternator mounting capscrew.

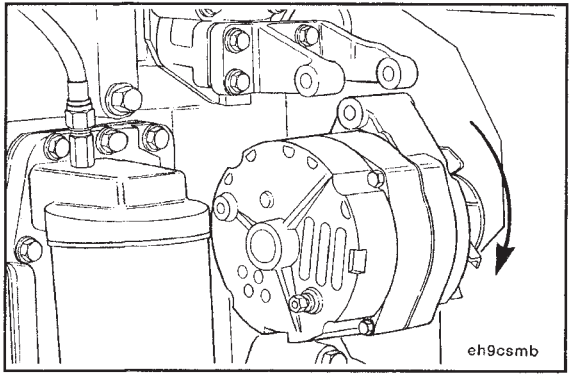

Lower and remove the alternator.

10 mm

Remove the thermostat housing, lifting bracket, thermostat, and thermostat seal.

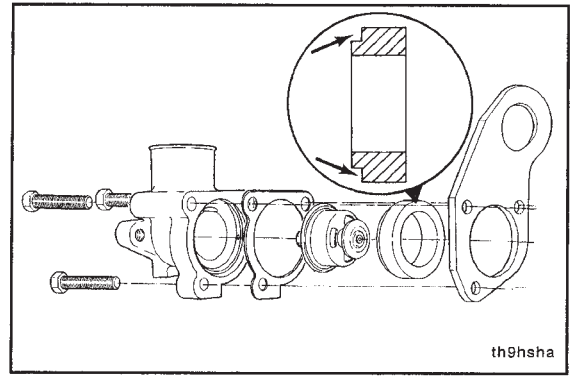

Clean

Clean the gasket surfaces.

NOTE: Do **not** let any debris fall into the thermostat cavity when cleaning gasket surfaces.

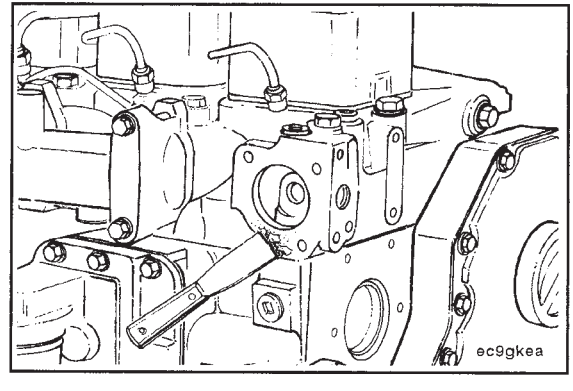

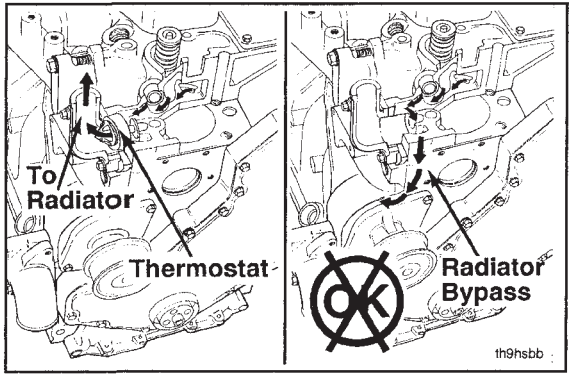

Install

⚠ CAUTION ⚠

Always use the correct thermostat and never operate the engine without a thermostat. An incorrect thermostat can cause the engine to overheat or run too cold. The engine will overheat if operated without a thermostat because the coolant flows back to the inlet of the water pump instead of through the radiator for cooling.

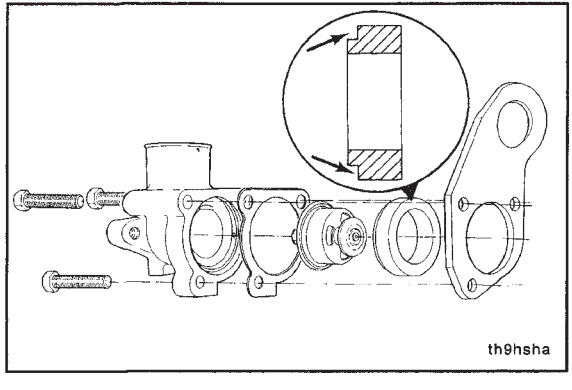

Assemble the removed parts in the reverse order of removal.

Make sure the gasket is aligned with the capscrew holes. Install the capscrews and finger-tighten.

The notched end of the rubber thermostat seal points away from the cylinder head.

10 mm

Tighten the capscrews.

Torque Value: 24 N•m [18 ft-lb]

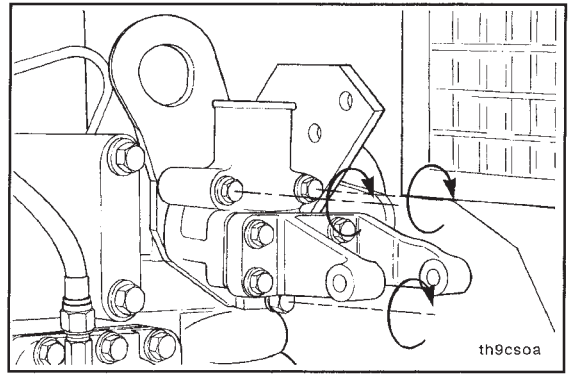

14 mm, 16 mm

Position the alternator and install the mounting capscrews.

Torque Value: (A) 24 N•m [18 ft-lb]

Torque Value: (B) 43 N•m [32 ft-lb]

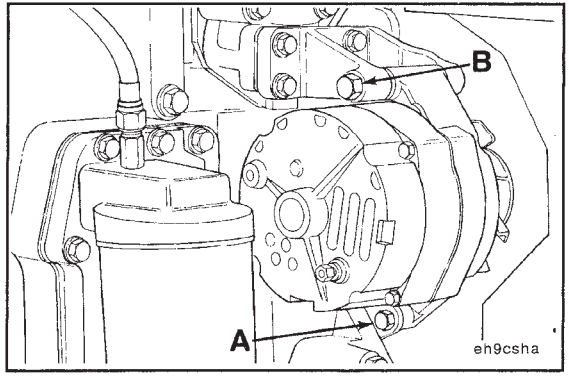

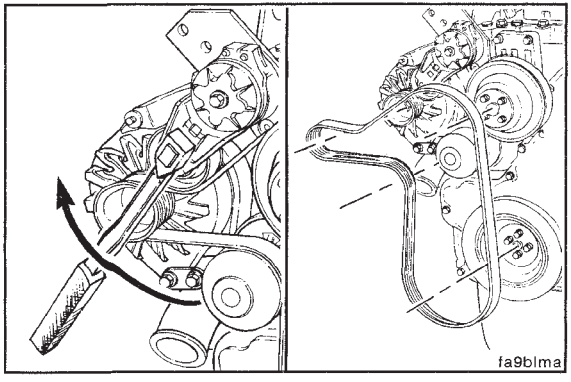

13 mm

Install the drive belt.

NOTE: After the tensioner has been raised to remove/install the belt, check the tensioner capscrew for the correct torque.

Torque Value: 43 N•m [32 ft-lb]

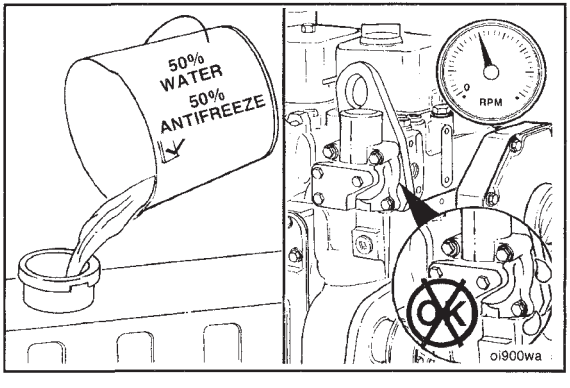

Fill

⚠ CAUTION ⚠

Be sure to vent the engine and aftercooler during filling, to remove air from the coolant system, or overheating will result.

Fill the cooling system. Operate the engine and check for leaks.

Fuel System - Overview

General Information

Fuel System Repair Summary

⚠ WARNING ⚠

Do not mix gasoline, alcohol, or gasohol with diesel fuel. This mixture can cause an explosion.

Components to Be Replaced	Tools	Preparatory Steps
Lift Pump	13-, 14-, and 17-mm wrenches	Clean debris.
High-Pressure Lines	10-mm socket, 14-, 17-, and 19-mm open-end wrenches, torque wrench	Clean debris.
Injector Fuel	10- and 19-mm open-end wrenches	
Drain Manifold	10- and 13-mm sockets, torque wrench	
Injectors	Ratchet, 24-mm deep well socket, torque wrench	Disconnect the high-pressure lines and fuel drain manifold.
Injection Pump	10-mm wrench, ratchet, 22-mm socket, 75-mm T-bar puller, 8-mm capscrews, 1/2-inch open-end wrench, flat screwdriver, 13-mm socket, 13-mm wrench, hammer, flat-chisel, torque wrench	Remove high-pressure line, supply line, and return line. Remove the AFC air line, oil line(s), fuel shutoff solenoid, and control linkage.
Fuel Solenoid (Rotary Pump)	Bosch® 24-mm wrench, Lucas CAV 22-mm wrench	Label and disconnect wiring.
Fuel Filter Head	24-mm, 75- to 80-mm and 90- to 95-mm filter wrench.	Clean debris.

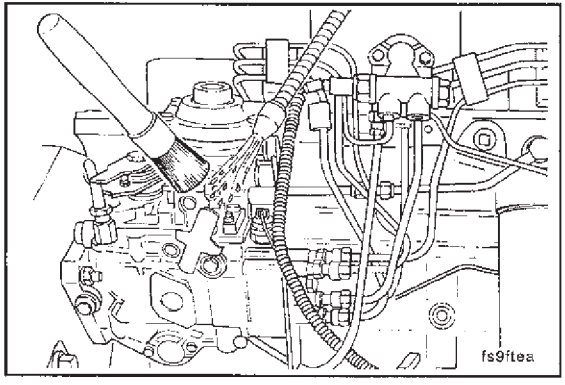

Fuel Supply Lines

Preparatory

Low Pressure Fuel Line

Thoroughly clean all fittings and components before removal. Make sure that the debris, water, steam, or cleaning solution does **not** reach the inside of the fuel system.

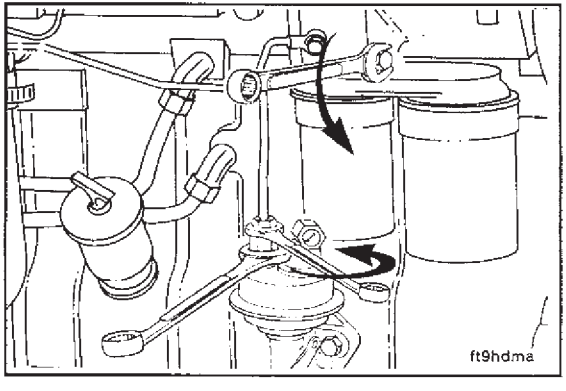

Remove

Diaphragm Style Lift Pump

14 mm, 17 mm

Disconnect the fuel line from the lift pump and filter head. Use two wrenches to disconnect the line from the lift pump.

Piston Style Lift Pump

14 mm, 17 mm, 20 mm

Disconnect the fuel line from the lift pump and filter head. Use two wrenches to disconnect the line from the lift pump.

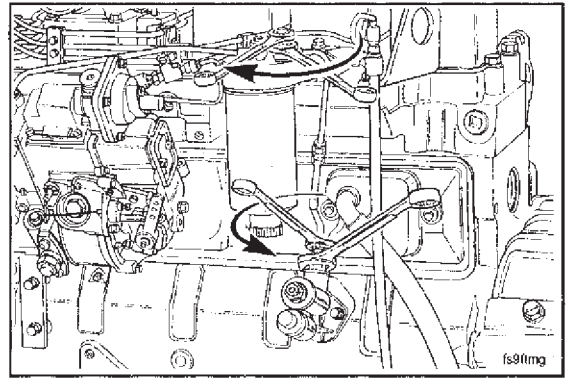

Install

Diaphragm Style Lift Pump

14 mm, 17 mm

Install the fuel line to the lift pump and filter head. Use two wrenches to tighten the connection to the lift pump.

Torque Value: 24 N•m [18 ft-lb]

NOTE: Do **not** overtighten the connection. Fuel leaks can result from overtightening.

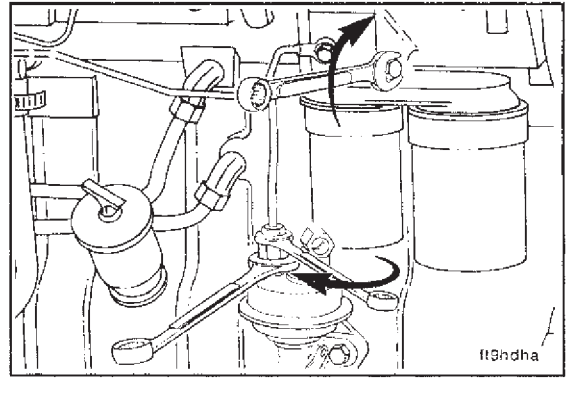

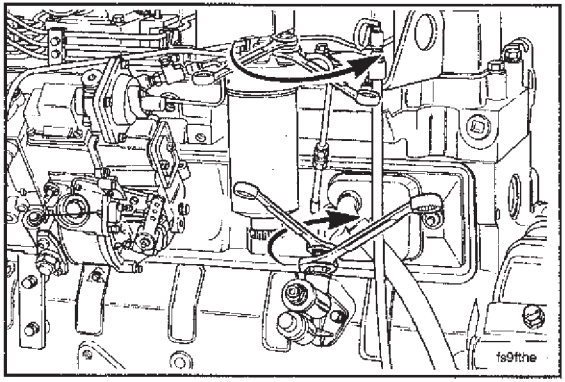

Piston Style Lift Pump

14 mm, 17 mm, 20 mm

Install the fuel line to the lift pump and filter head. Use two wrenches to tighten the connection to the lift pump.

Torque Value: 24 N•m [18 ft-lb]

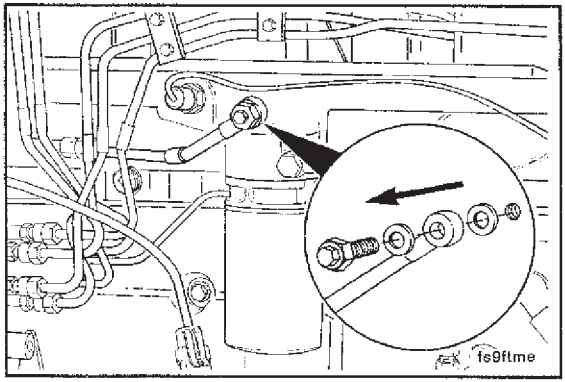

Injection Pump Supply Line Replacement

17 mm

Remove the bleed screw banjo fitting.

14 mm, 16 mm, and 24 mm

Remove the supply line (Bosch® injection pump).

NOTE: Replace the seals (1) in the fittings if the line is disassembled.

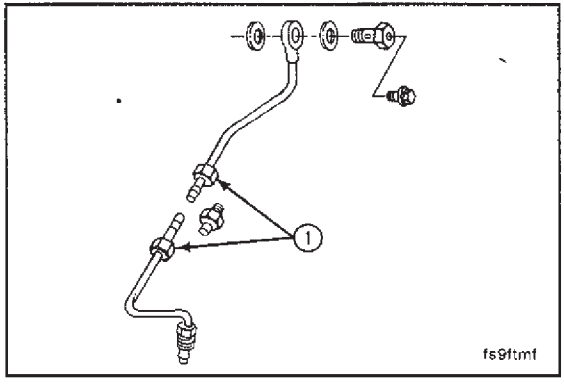

14 mm, 16 mm, 19 mm, and 24 mm

Remove the supply line (Lucas CAV injection pump). The Lucas CAV pump has two fittings for the supply line.

Replace fitting sealing washers (1), and ferrules (2) each time they are removed.

Torque Value: 32 N•m [24 ft-lb]

NOTE: Replace the seals in the fittings if the line is disassembled.

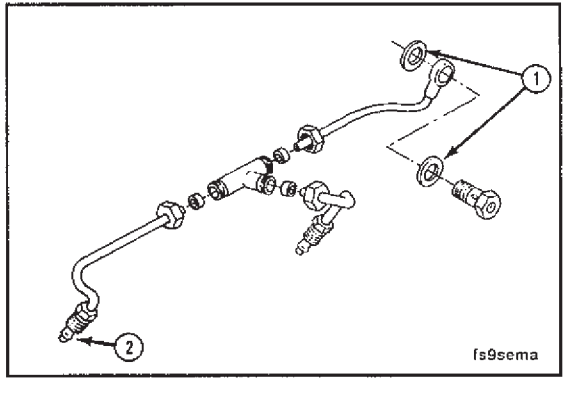

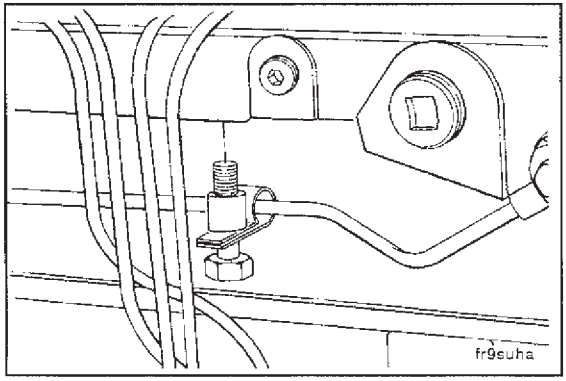

17 mm

Engines rated at 2500 rpm and above require additional fuel line support. Install as illustrated.

Torque Value: 24 N•m [18 ft-lb]

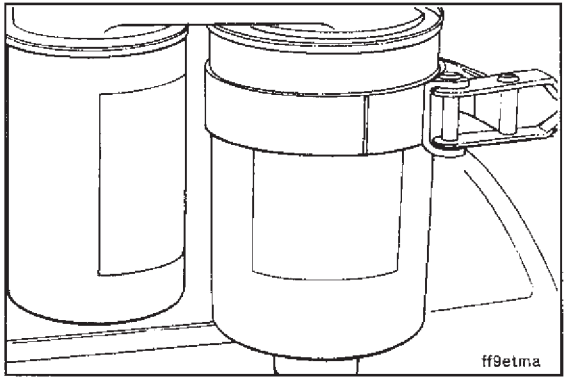

Fuel Filter Adapter

Preparatory

- Clean debris
- Remove fuel filters.

Remove

24 mm

Remove the retaining nut, filter head adapter, and sealing washers.

Install in reverse order of removal.

Torque Value: 32 N•m [24 ft-lb]

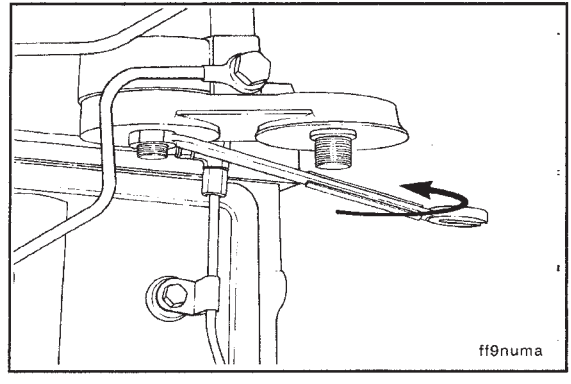

Fuel Lift Pump

Preparatory

- Clean debris from around the lift pump.
- Disconnect the fuel supply lines.

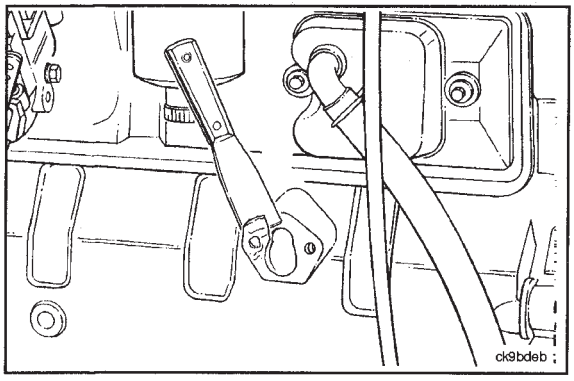

Clean

Piston Style

Clean the mounting surface on the cylinder block.

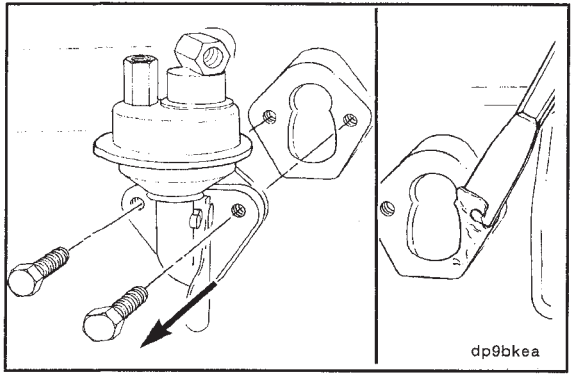

Diaphragm Style

10 mm

Remove the lift pump.

Clean the mounting surface on the cylinder block.

Install

Diaphragm Style

10 mm

Install the lift pump and a new gasket.

Torque Value: 24 N•m [18 ft-lb]

Connect the fuel lines.

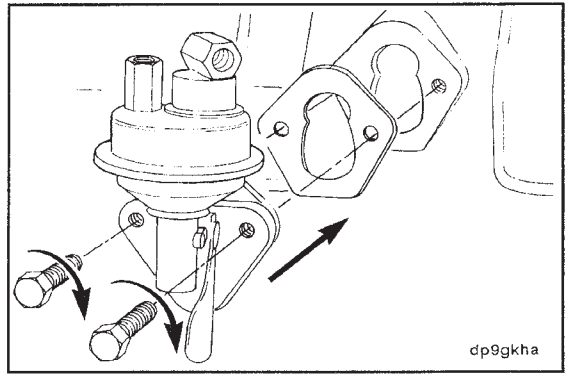

Piston Style

CAUTION

Alternately tighten the mounting capscrews. As the capscrews are tightened, the fuel transfer pump plunger is pushed into the pump. Failure to tighten the capscrews evenly can result in the plunger being bent or broken.

Install the pump.

Torque Value: 24 N•m [18 ft-lb]

Connect the fuel lines.

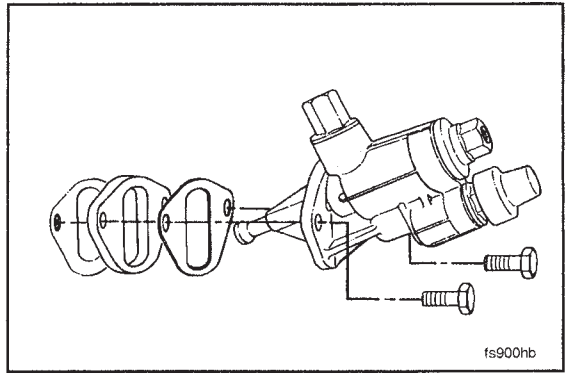

Injector Supply Lines (High Pressure)

Preparatory

- Clean all debris from around the fittings.

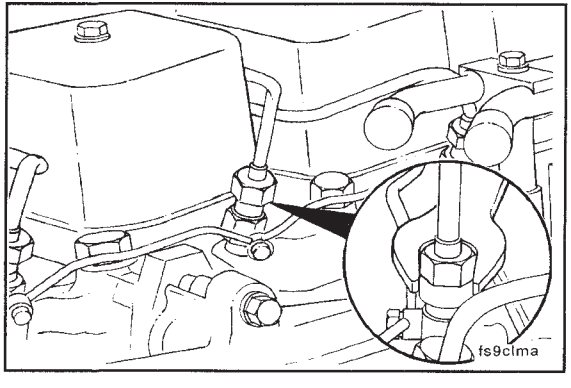

Remove

Rotary Pumps

17 mm

Disconnect the fuel line(s) from the injector.

NOTE: If individual lines are to be replaced, remove the support clamp from the set of lines containing the line to be replaced.

17 mm

Disconnect the fuel line(s) from the fuel pump. Install protective covers onto the injectors and delivery valves to prevent entry of dirt into the system.

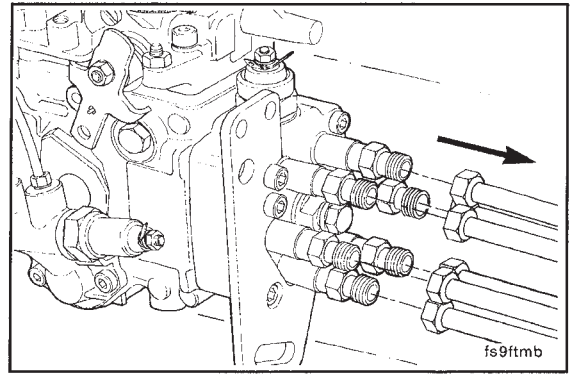

Inline Pumps

8 mm, 17 mm, and 19 mm

Disconnect the line(s) from the injector(s).

NOTE: If individual lines are to be replaced, remove the support clamp from the set of lines containing the line to be removed.

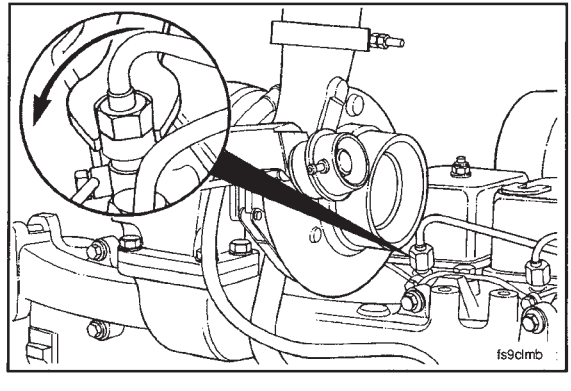

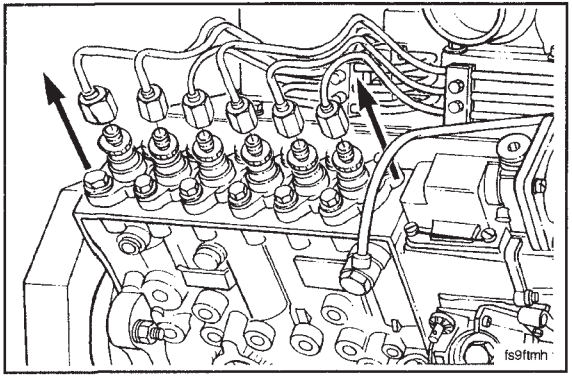

19 mm

Disconnect the line(s) from the fuel pump.

Install

Rotary Pumps

CAUTION

Install the support clamp in the original position and, to prevent damage from high-frequency vibration, make sure the lines have not been bent or do not contact each other or another component.

CAUTION

To prevent damage to the fuel lines, they must be connected to the injectors and fuel injection pump in a free state without forcing the connecting nuts. The fuel lines are correctly sized for each application. Bending the lines is not acceptable and can cause fuel leaks.

17 mm

Install the fuel lines in reverse order of removal.

Torque Value: (Line Fittings)
24 N•m [18 ft-lb]

Torque Value: (Support Clamp)
6 N•m [53 in-lb]

Torque Value: (Support Bracket)
24 N•m [18 ft-lb]

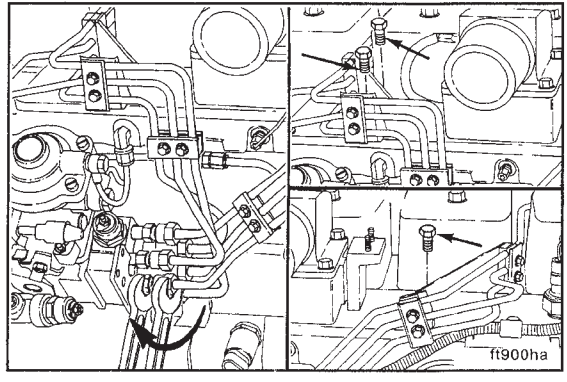

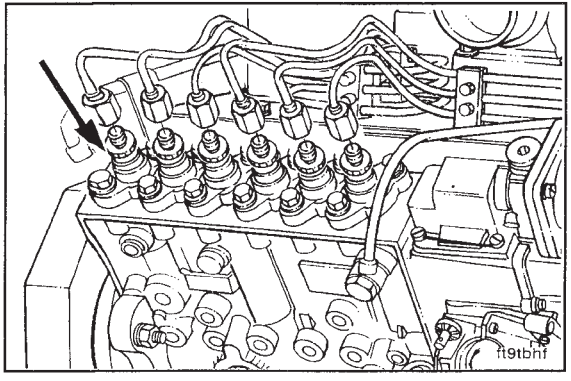

Inline Pumps

19 mm

Install the lines in reverse order of removal.

Torque Value: (Line Fittings)

24 N•m [18 ft-lb]

Torque Value: (Support Clamp)

6 N•m [52 in-lb]

Torque Value: (Support Bracket)

24 N•m [18 ft-lb]

NOTE: If removed, reinstall the support clamp in the original position, and make sure the lines do **not** contact each other or another component. Install a protective cover on the injectors and fuel delivery valves to prevent the entry of dirt into the system.

Fuel Manifold (Drain)

Preparatory

- Clean debris.

Remove

Rotary Pumps

10 mm

Remove the capscrew from the hold-down clamp.

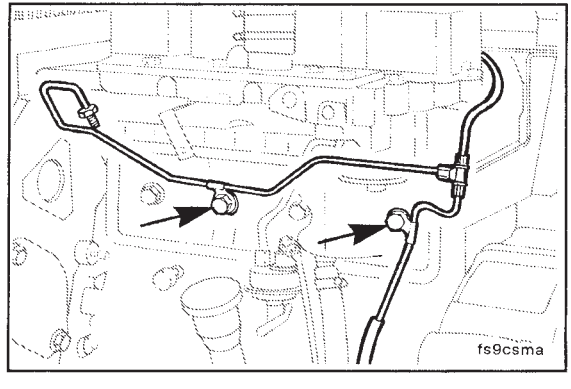

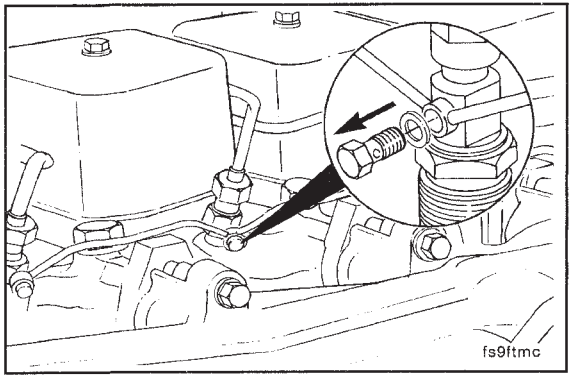

10 mm

Remove the banjo fitting screws and washers.

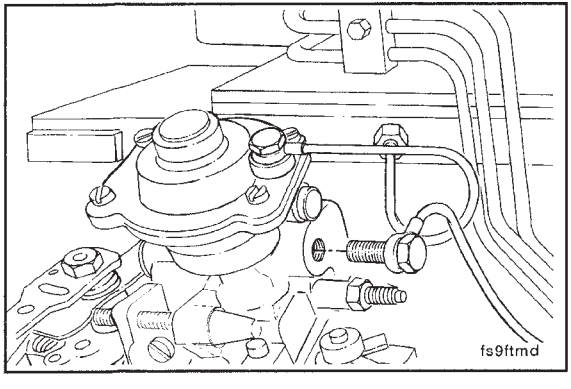

17 mm

Disconnect the drain line fitting from the injection pump.

Inline Pumps

10 mm

Remove the drain line banjo capscrew from the fuel filter head. Remove the capscrew from the bracket on the intake cover.

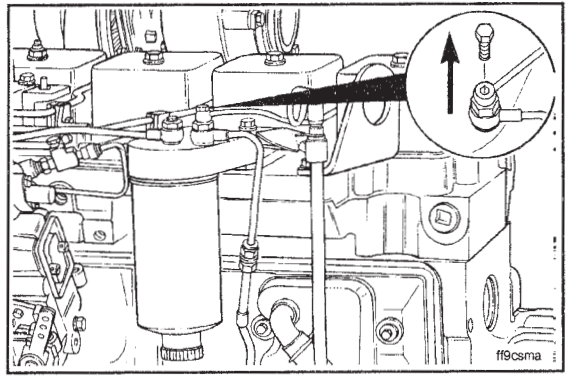

10 mm

Remove the banjo capscrews from the injectors.

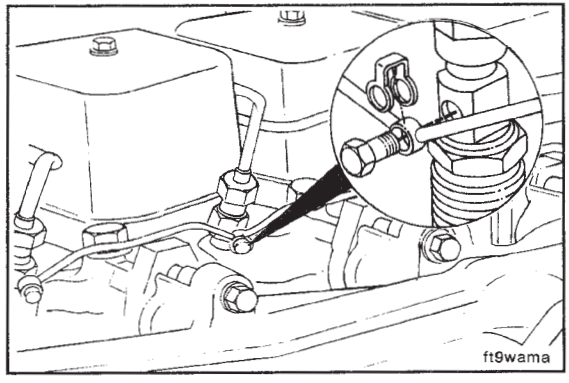

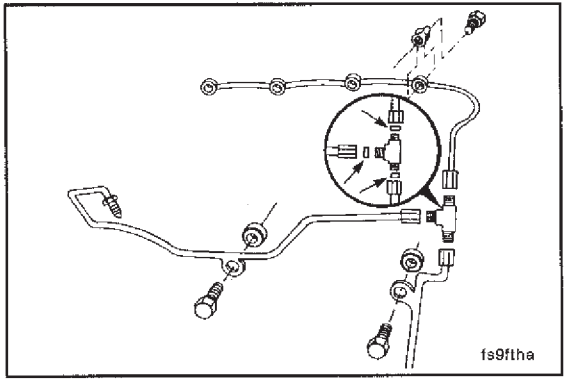

Install

Rotary Pumps

NOTE: Use new seals and sealing washers.

Assemble the drain line and fuel drain manifold in the reverse order of removal.

Torque Value: (Banjo Fitting Screw)

15 N•m	[133 in-lb]

Torque Value: (Banjo Fitting)

9 N•m	[80 in-lb]

Torque Value: (Clamp Screw)

24 N•m	[18 ft-lb]

Inline Pumps

10 mm

NOTE: Use new seals and sealing washers.

Assemble the drain line and drain manifold in the reverse order of removal.

Torque Value: (Banjo Fitting Screw)

15 N•m	[133 in-lb]

Torque Value: (Banjo Fitting)

9 N•m	[80 in-lb]

Torque Value: (Bracket Capscrew)

24 N•m	[18 ft-lb]

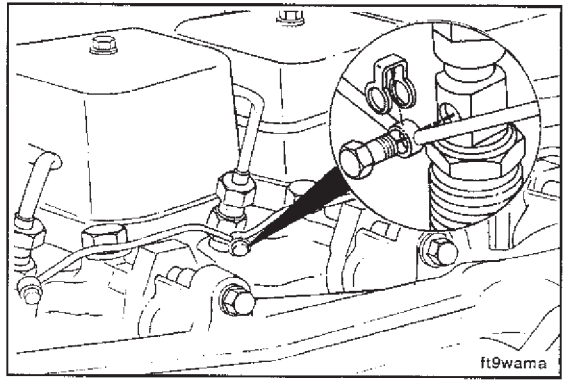

Injector

Preparatory

- Thoroughly clean around the injectors.
- Disconnect the high-pressure fuel lines.
- Disconnect the fuel drain manifold.

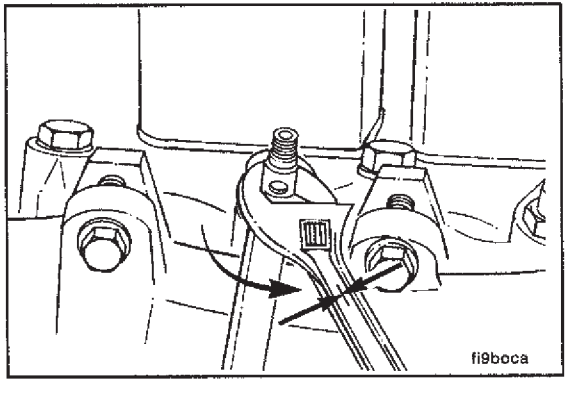

Remove

16-mm and 24-mm Box Wrenches

△ CAUTION △

The injector must not rotate in the bore of the cylinder head. This will damage the cylinder head.

Remove the injectors.

NOTE: Hold the injector body with a 16-mm wrench while loosening the hold-down nut with a 24-mm end wrench.

Clean

Injector Bore Brush, Part No. 3822509

Clean the injector nozzle bore using service tool No. 3822509.

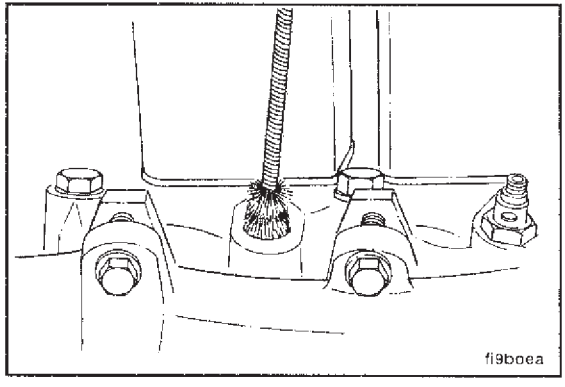

Install

Remove the injector hold-down nut, and apply a coat of anti-seize compound to injector surface (A). Avoid getting anti-seize compound in the fuel drain hole (B).

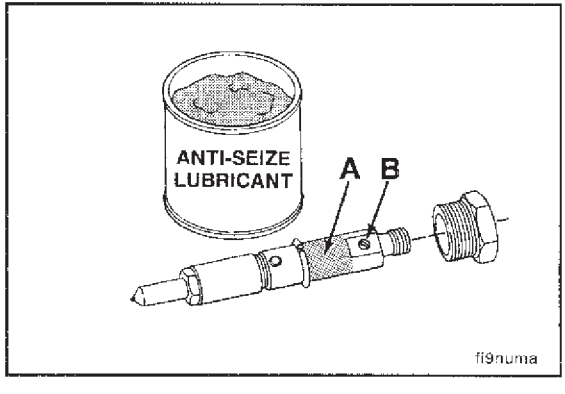

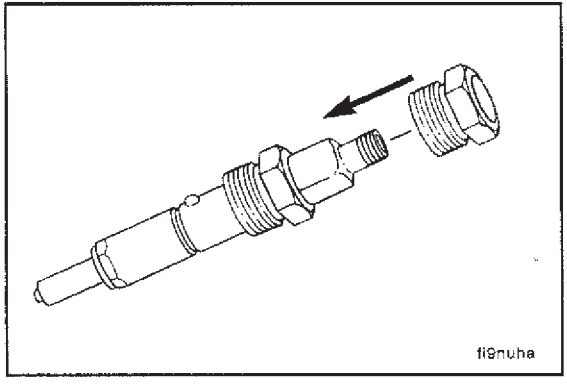

Install the hold-down nut on the injector body.

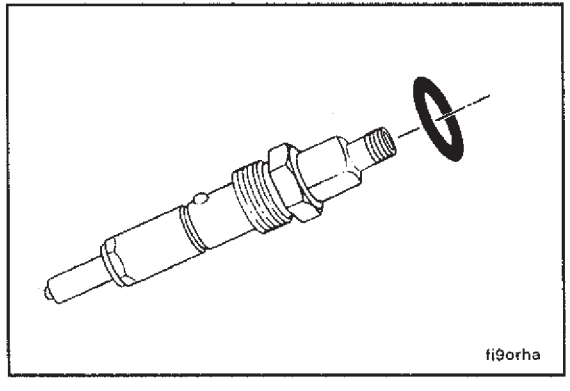

Install a new o-ring into the recessed groove on the top of the hold-down nut. Make sure the o-ring is **not** cut or twisted when installing (Bosch® and Stanadyne).

NOTE: CAV injectors retain the o-ring inside the hold-down nut.

Apply a light coat of anti-seize compound to the threads of the injector hold-down nut.

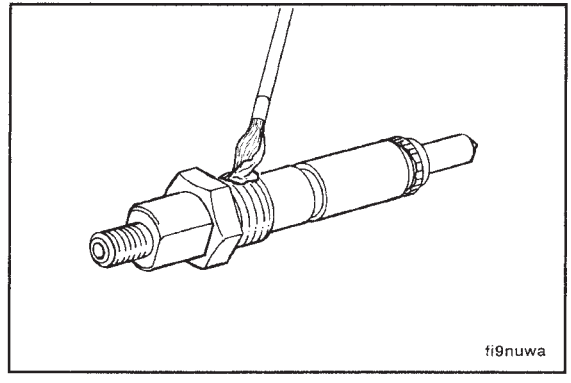

Assemble the injector and new copper washer.

Use **only** one copper washer.

NOTE: A light coat of clean lubricating engine oil between the washer and injector can help to keep the washer from falling during installation.

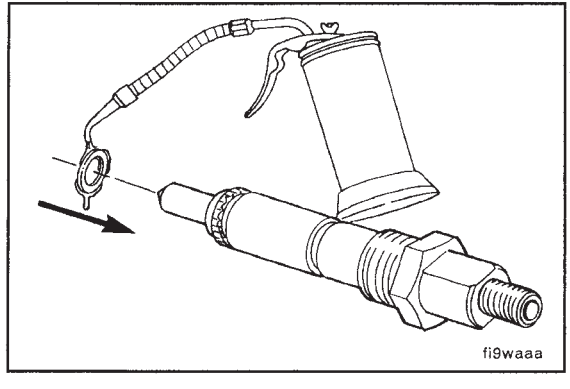

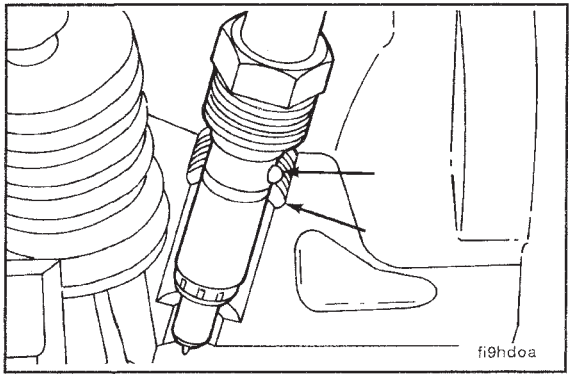

24 mm

Install the injectors.

The protrusion on the side of the nozzle fits into a notch in the head to orient the injector.

Tighten the injector nozzle nuts.

Torque Value: 60 N•m [44 ft-lb]

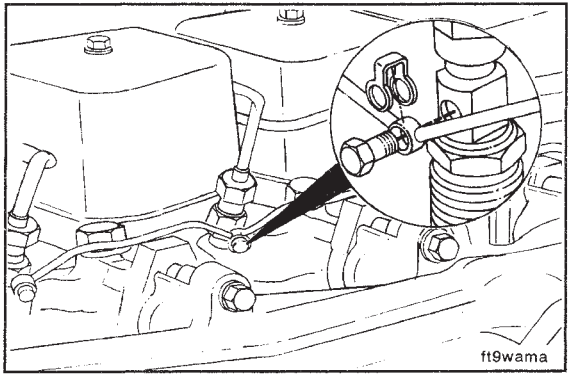

10 mm

Install the fuel drain manifold.

Torque Value: 9 N•m [80 in-lb]

17 mm

Install the high-pressure fuel lines.

Torque Value: 24 N•m [18 ft-lb]

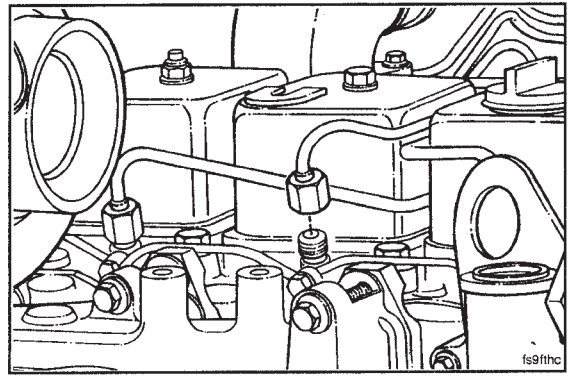

Fuel Shutoff Valve

Preparatory

- Label and disconnect wiring.

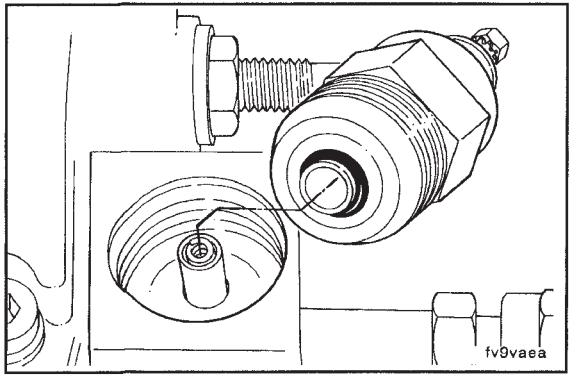

Clean

Rotary Pumps

22 mm - CAV, 24 mm - Bosch®

Clean around the valve.

Remove the valve.

NOTE: Be careful **not** to drop the piston and spring when removing the valve.

Replace the valve and connect the electrical wire.

Torque Value: 43 N•m [32 ft-lb]

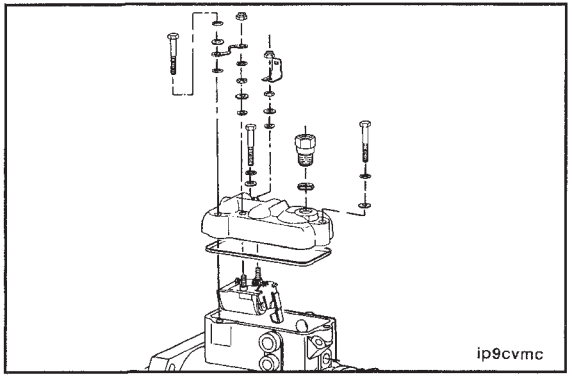

Remove

- Remove the electrical wiring.
- Remove the fuel drain line.
- Remove the throttle shutoff linkage.
- Remove the fuel injection pump top cover.
- Disassemble the fuel injection pump top cover.

Install

5/16 Inch

Install new insulating tubes onto the terminals on the terminal studs of the new solenoid.

Install the valve into the cover.

Torque Value: 14 N•m [124 in-lb]

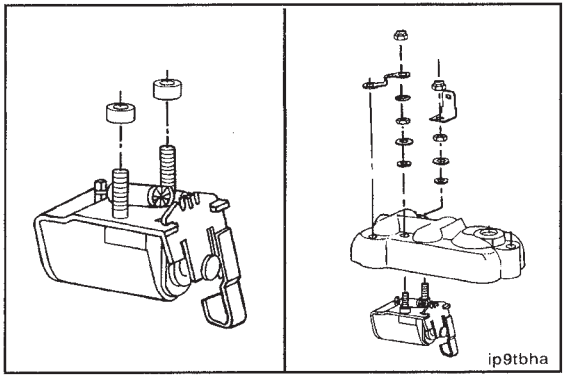

5/16 Inch

Install the cover and gasket onto the fuel injection pump.

NOTE: Extreme care **must** be taken in assembling the cover to the fuel injection pump to make sure the shutoff arm is in proper contact with the linkage hook tab.

Install the cover to the pump at a downward angle from the driveshaft end of the fuel injection pump; then slide the cover horizontally into position.

Torque Value: 5 N•m [44 in-lb]

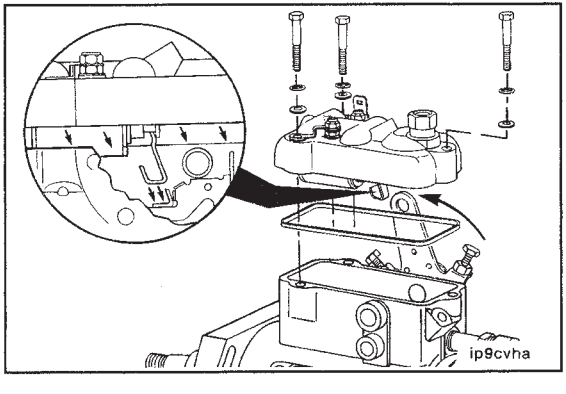

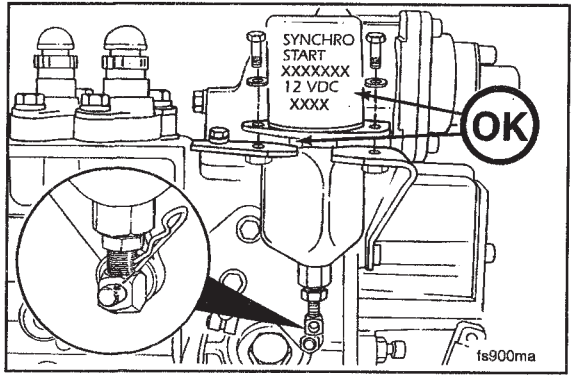

Inline Pumps

RQVK Governor Shutoff Solenoid

10 mm

Remove the hitch pin clip, mounting capscrews, and the fuel shutoff solenoid.

Install the new solenoid in reverse order of removal and connect the wires. Make sure the part number and cable tie block is facing away from the engine.

Torque Value: 10 N•m [89 in-lb]

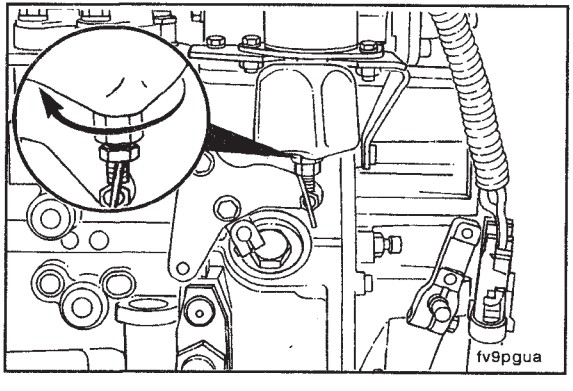

10 mm, 16 mm

Adjust the solenoid linkage as necessary so that the plunger is magnetically held in with the shutoff lever in the absolute full-run position. Turn the large hex on the end of the plunger to make adjustments.

Cold Start Timing Advance System (KSB) Temperature Switch

Remove

27 mm

Disconnect the KSB (1) wiring harness (2) from the switch (3).

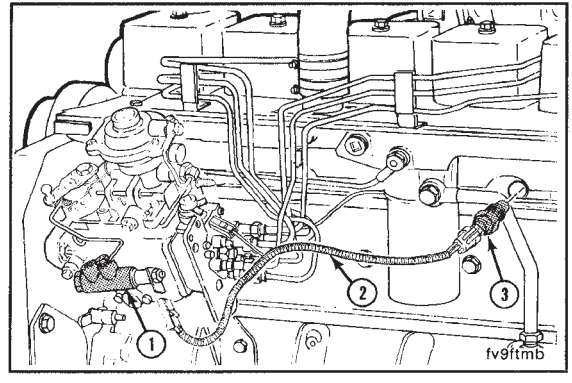

Install

T30 TORX, 12 mm

Replace the KSB, and wiring harness.

Torque Value: KSB Mounting Nuts:

9 N•m	[80 in-lb]

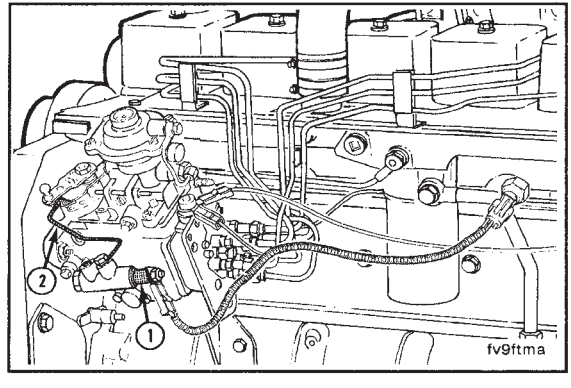

Fuel Injection Pump, Rotary

Preparatory

- Remove all fuel lines.
- Remove control linkage.
- Remove fuel shutoff solenoid.

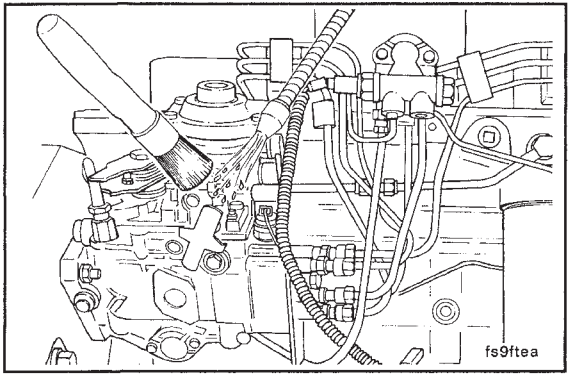

⚠ CAUTION ⚠

A diesel engine can not tolerate dirt or water in the fuel system. A tiny piece of dirt or a few drops of water in the injection system can stop the engine.

Clean all external surfaces of the injection pump, including all line connections and fittings that are to be disconnected. Clean the area around the injection pump gear cover to prevent dirt from entering the crankcase.

Remove

CAUTION

To prevent damage to the timing pin, be sure to disengage the pin after locating top dead center.

Locate top dead center for cylinder No. 1. Push the top dead center pin into the hole in the camshaft gear while slowly barring the engine.

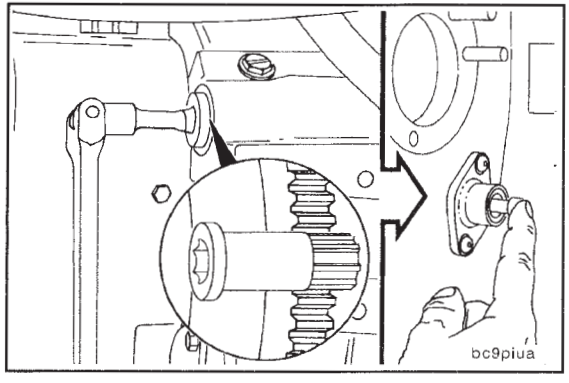

14 mm

Loosen the CAV injection pump lock screw and position the special lock washer.

Tighten the lock screw against the driveshaft.

Torque Value: 7 N•m [62 in-lb]

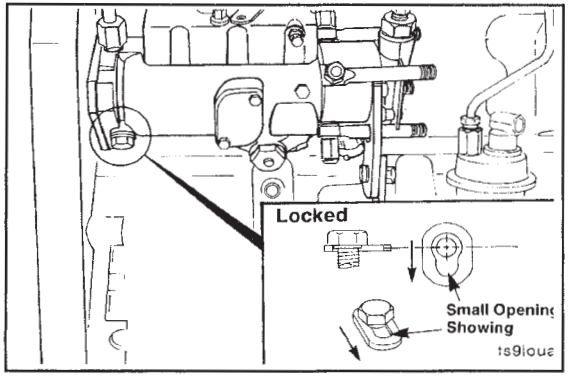

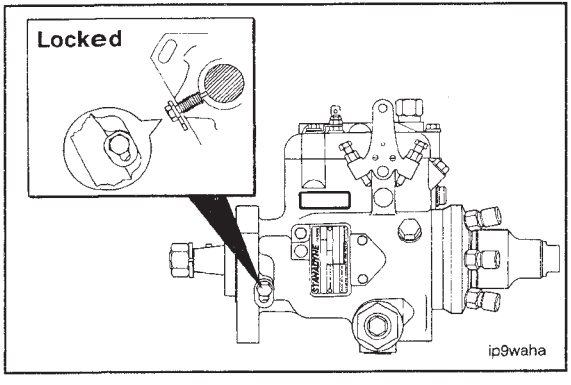

3/8 Inch

Loosen the Stanadyne DB4 fuel injection pump lock screw and position the special washer.

Tighten the lock screw until contact is made with the fuel injection pump driveshaft.

Torque Value: 12 N•m [106 in-lb]

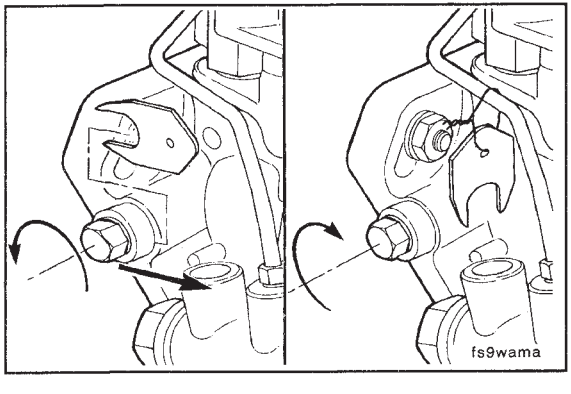

10 mm

The special washer on the Bosch® injection pump **must** be removed so the lock screw can be tightened against the driveshaft.

Tighten the lock screw.

Torque Value: 30 N•m [22 ft-lb]

22 mm

Remove the gear cover access cap.

Remove the nut and washer from the fuel pump shaft.

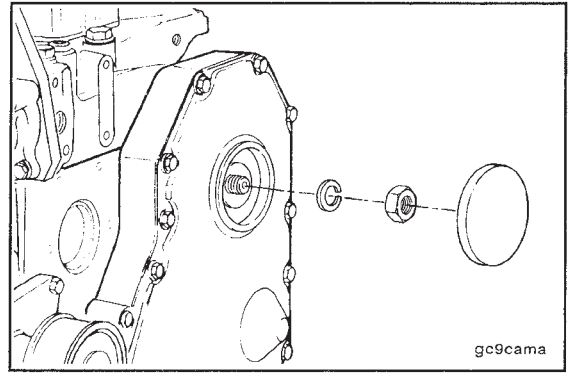

75-mm T-Bar Puller

Pull the fuel pump drive gear loose from the shaft.

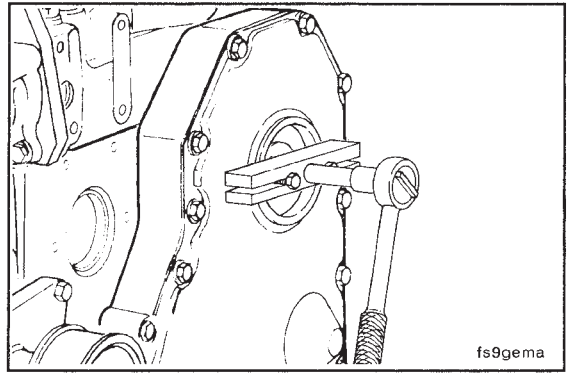

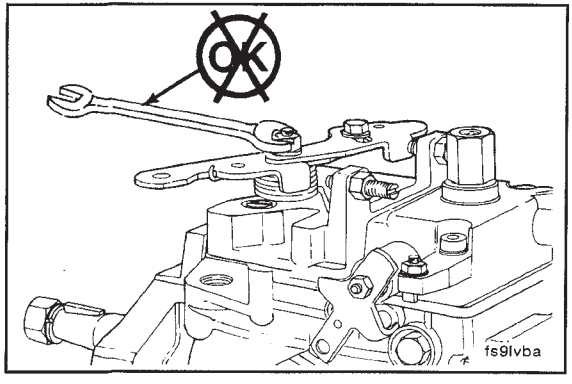

△ CAUTION △

Do not remove the control lever. The lever is indexed to the shaft during pump calibration. Removal of the lever will alter the fuel pump calibration and affect engine performance.

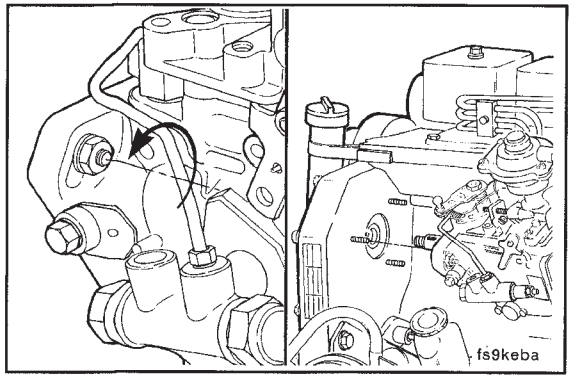

13 mm

NOTE: Do **not** drop the drive gear key when removing the pump.

Remove the three mounting nuts.

Remove the fuel pump.

Install

Make sure the engine has cylinder No. 1 at top dead center.

The keyway in the shaft of new reconditioned pumps will be locked in a position corresponding to the keyway in the drive gear when cylinder No. 1 is at top dead center on the compression stroke.

After verifying that cylinder No. 1 is at top dead center, install the pump. Make sure the key does **not** fall into the gear housing.

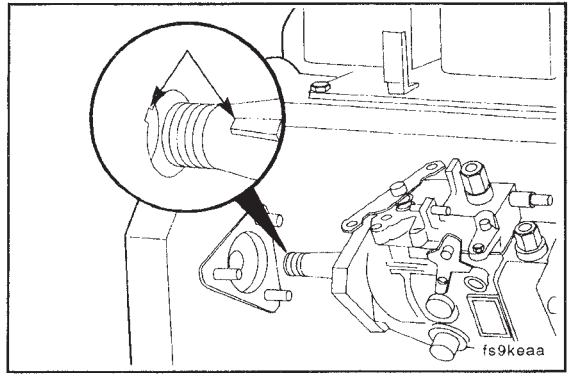

Attach the pump by finger-tightening the three mounting nuts. The pump **must** be free to move in the slots.

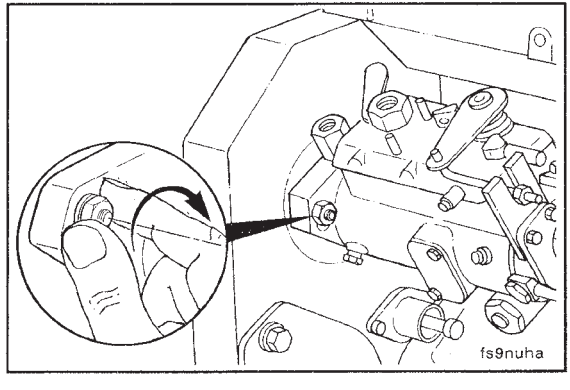

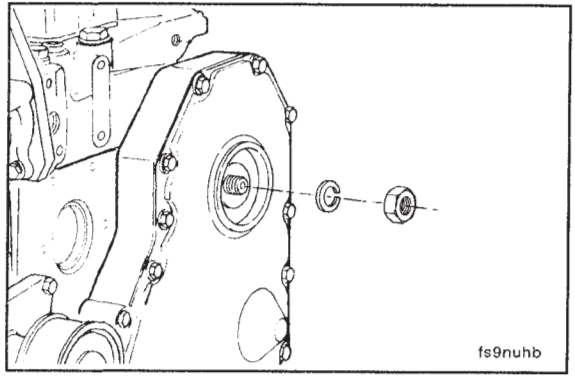

22 mm (CAV, Stanadyne), 24 mm (Bosch®)

Attach the pump driveshaft nut and spring washer. The pump can rotate slightly due to gear helix and clearance. This is acceptable provided the pump is free to move on the flange slots and the crankshaft does **not** move.

NOTE: Do **not** overtighten. This is **not** the final torque.

Torque Value: 15 to 20 N•m [133 to 177 in-lb]

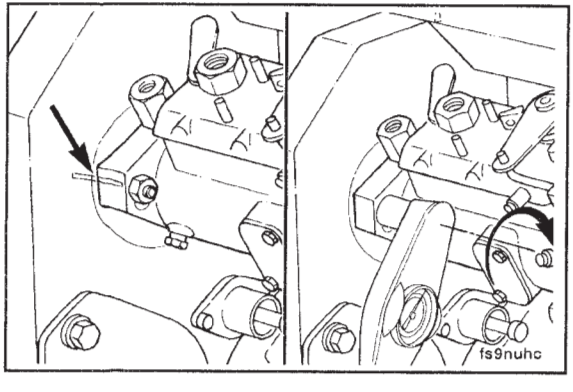

△ CAUTION △

The pump shaft must be unlocked after installation to prevent pump damage.

13 mm

If reinstalling the removed pump, install the pump onto the engine. Rotate the pump to align the scribe marks. Tighten the three mounting nuts.

Torque Value: 24 N•m [18 ft-lb]

13 mm

If installing a new or rebuilt pump without scribe marks, take up the gear lash by rotating the pump against the direction of drive rotation.

Tighten pump retaining nuts.

Torque Value: 24 N•m [18 ft-lb]

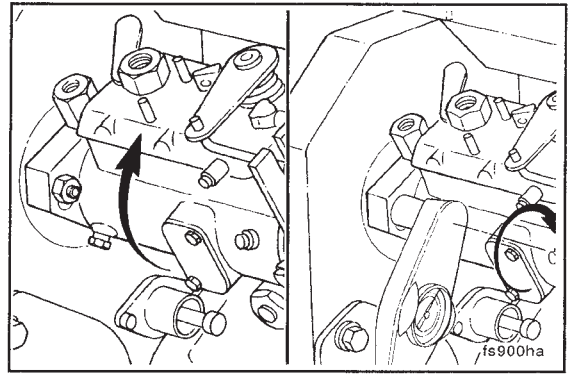

If a new or rebuilt pump is being installed, permanently mark the injection pump flange to match the mark on the gear housing.

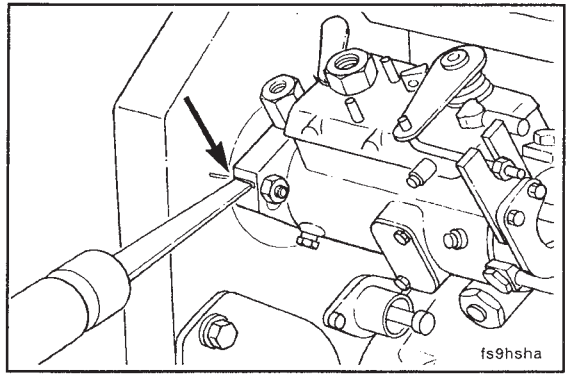

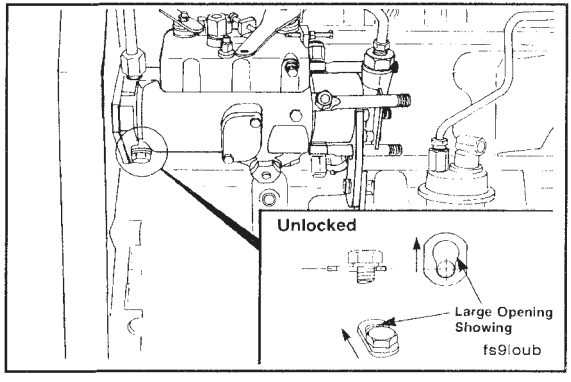

14 mm

Loosen the CAV pump lock screw, and position the special washer behind the lock screw head.

Tighten the pump lock screw.

Torque Value: 20 N•m [15 ft-lb]

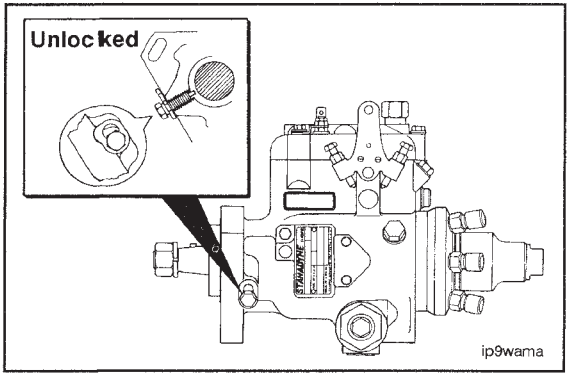

3/8 Inch

Loosen the Stanadyne DB4 fuel injection pump lock screw, and position the special washer behind the lock screw.

Tighten the lock screw.

10 mm

NOTE: On the Bosch® pump, the special washer is wired to the pump and **must** be installed under the lock screw.

Tighten the pump lock screw.

Torque Value: 13 N•m [115 in-lb]

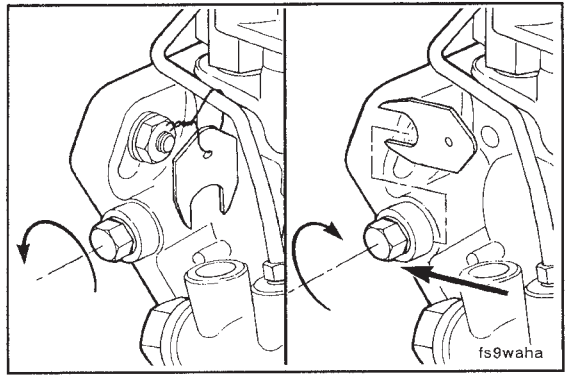

NOTE: Be sure to disengage the timing pin.

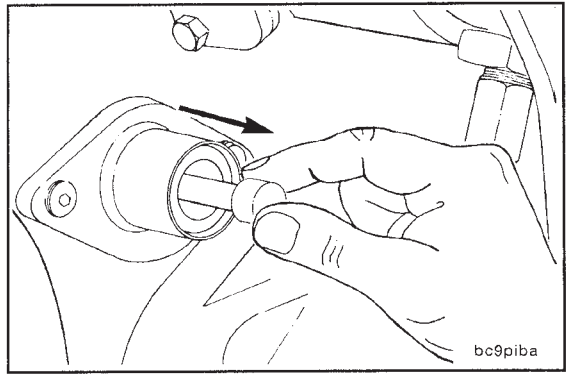

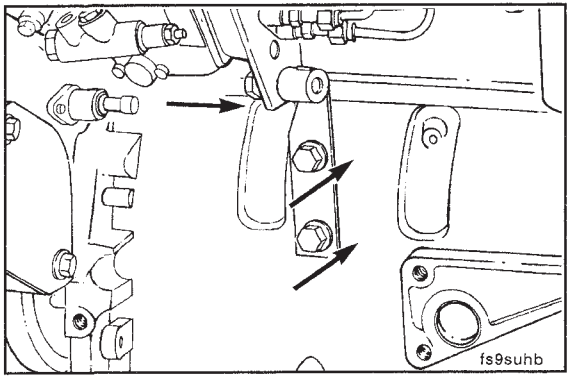

Install the injection pump support bracket. Finger-tighten all capscrews before final tightening.

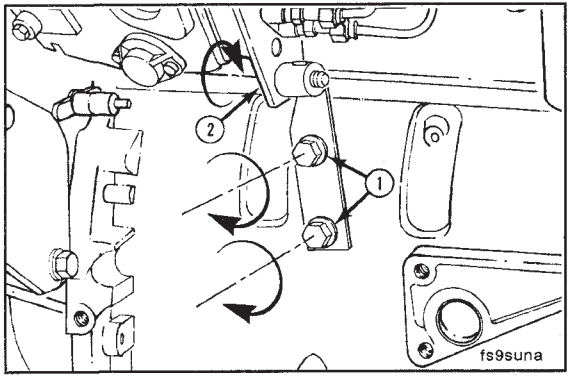

Tighten the capscrews.

Torque Value: 24 N•m [18 ft-lb]

NOTE: Tighten the bracket-to-block mounting capscrews (1) before tightening the bracket-to-injection-pump capscrew (2).

22 mm

Tighten the drive gear mounting nut.

Torque Value: Bosch®

65 N•m [48 ft-lb]

Torque Value: Stanadyne

65 N•m [48 ft-lb]

Install the access cap.

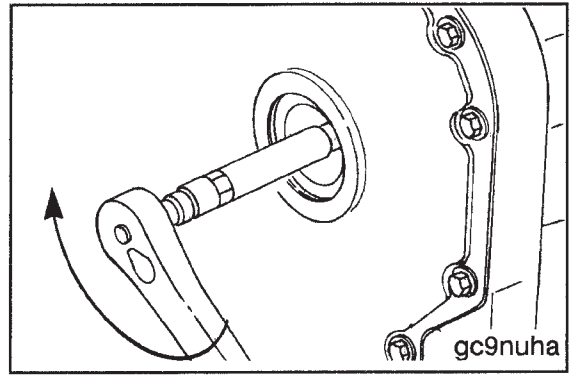

8 mm

Install the solenoid wiring and all fuel lines.

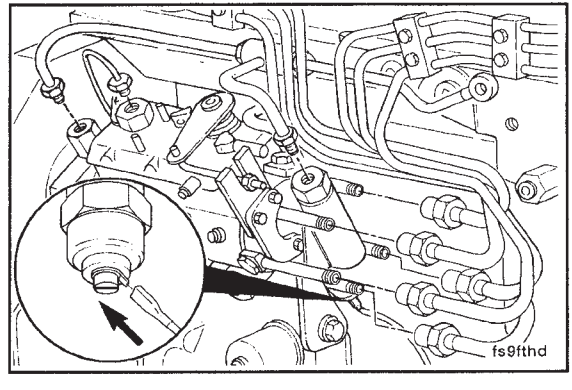

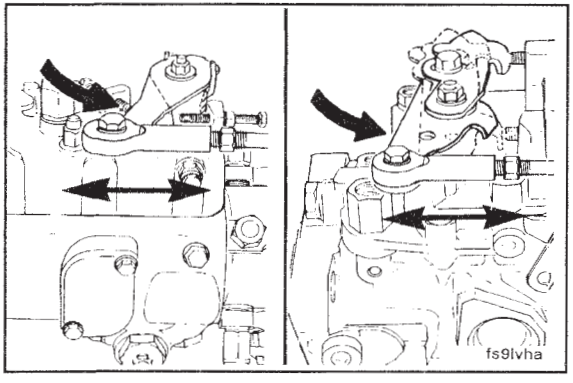

NOTE: When connecting the cable/rod to the control lever, adjust the length so the lever has stop-to-stop movement.

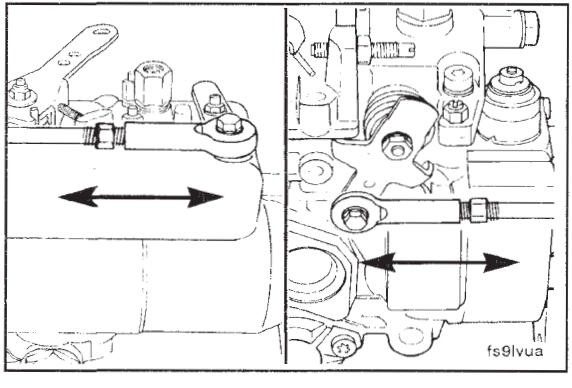

NOTE: Similarly, adjust the length of the cable/rod to the mechanical shutdown lever so there is a stop-to-stop movement.

Bleed all air from the fuel system.

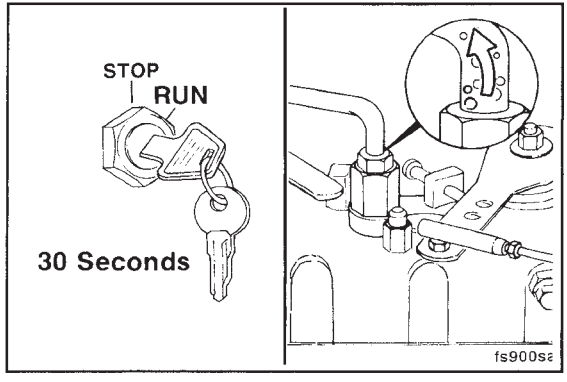

If necessary, adjust the idle speed.

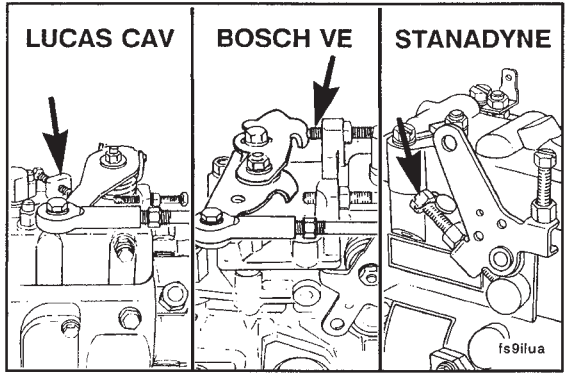

Fuel Injection Pumps, In-Line

Preparatory

- Clean debris.
- Remove all fuel lines.
- Remove control linkage.
- Remove fuel shutoff solenoid.
- Remove AFC air line.
- Remove oil line(s).

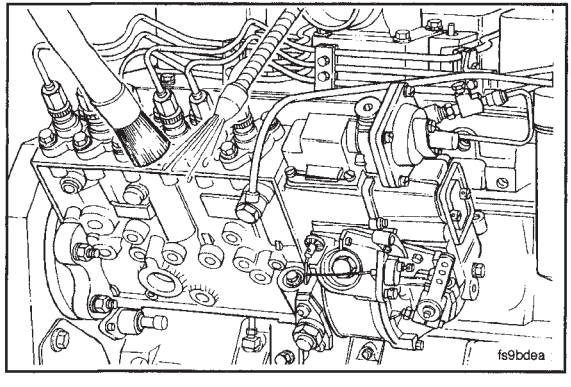

Remove

⚠ CAUTION ⚠

A diesel engine can not tolerate dirt or water in the fuel system. A tiny piece of dirt or a few drops of water in the injection system can stop the unit.

Clean all external surfaces of the injection pump, including all line connections and fittings that are to be disconnected. Clean the area around the injection pump gear cover to prevent dirt from entering the crankcase.

Engine Barring Gear, 1/2-Inch Ratchet or Breaker Bar

Locate top dead center for cylinder No. 1. Push the top dead center pin into the hole in the camshaft gear while slowly barring the engine.

NOTE: Be sure to disengage the pin after locating top dead center.

The barring gear inserts into the flywheel housing and engages the flywheel ring gear. The engine can then be rotated by hand using a 1/2-inch ratchet or breaker bar.

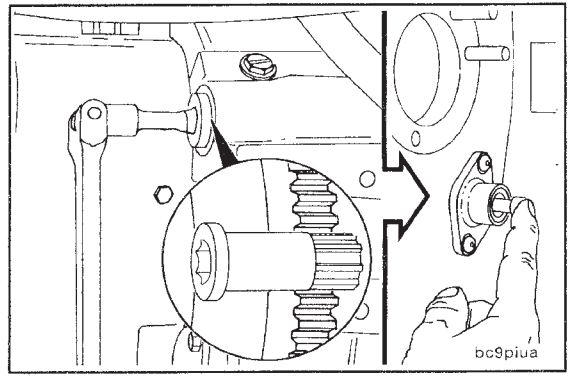

10 mm

Remove the fuel pump mounting bracket.

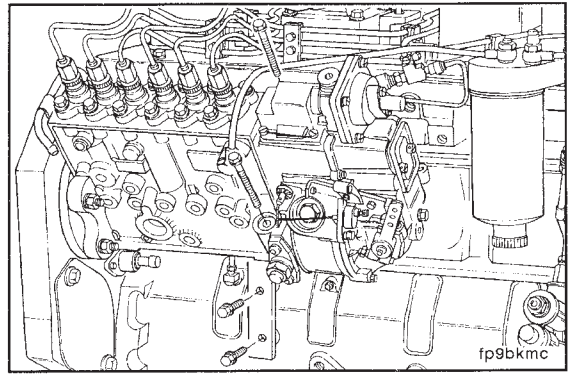

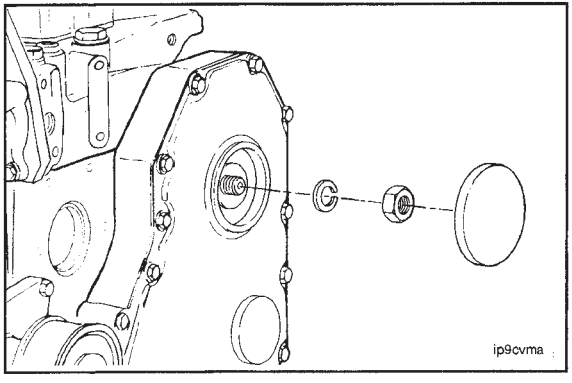

30 mm (P Pump)

Remove the gear cover access cap.

Remove the nut and washer from the fuel pump shaft.

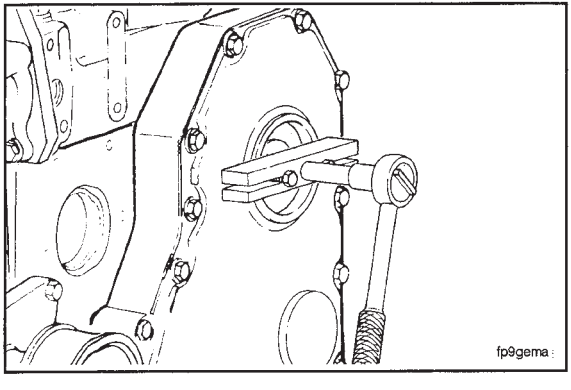

75-mm T-Bar

Pull the fuel pump drive gear loose from the shaft.

15 mm

Remove the four mounting nuts.

Remove the fuel pump.

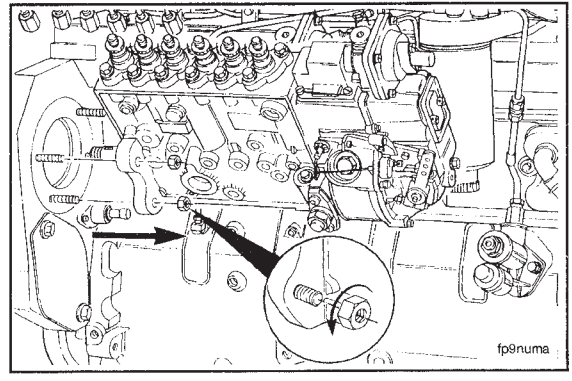

Install

Engine Barring Tool, Part No. 3824591

Make sure the engine has cylinder No. 1 at top dead center.

The barring gear inserts into the flywheel housing and engages the flywheel ring gear. The engine can then be rotated by hand using a 1/2-inch ratchet or breaker bar.

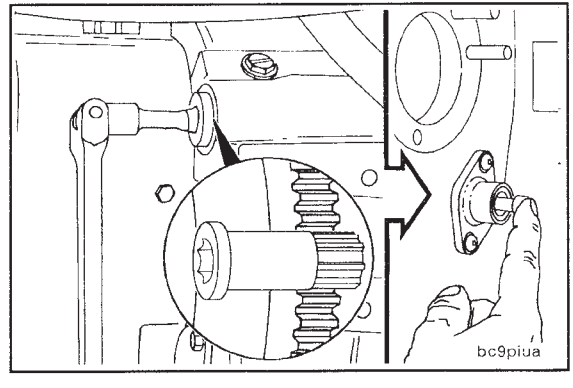

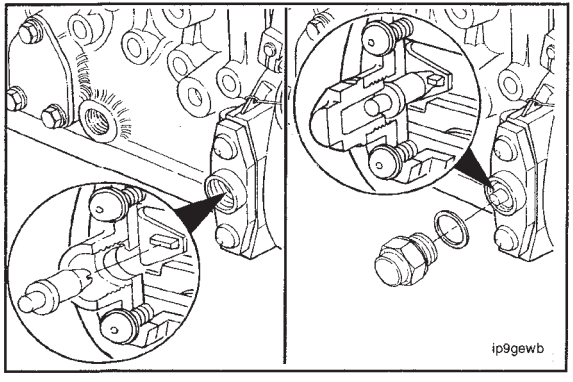

Injection Pump Timing

The injection pump also has a timing pin, located in the governor housing, to position the pump shaft to correspond with top dead center for cylinder No. 1.

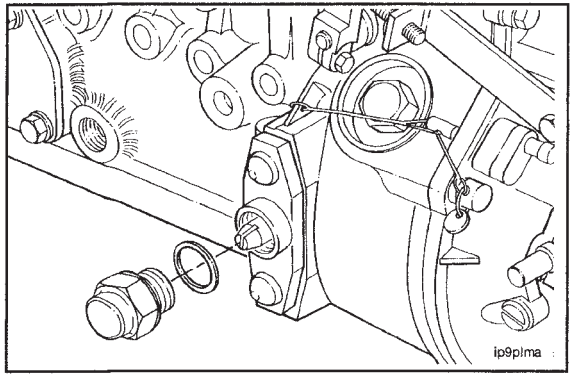

24 mm

Remove the access plug.

Remove the timing pin.

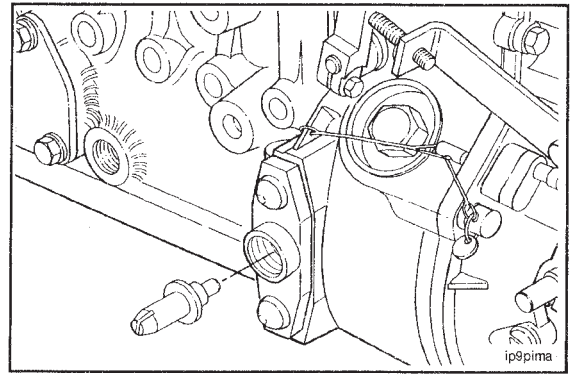

If the timing tooth is **not** aligned with the timing pin hole, rotate the pump shaft until the timing tooth aligns.

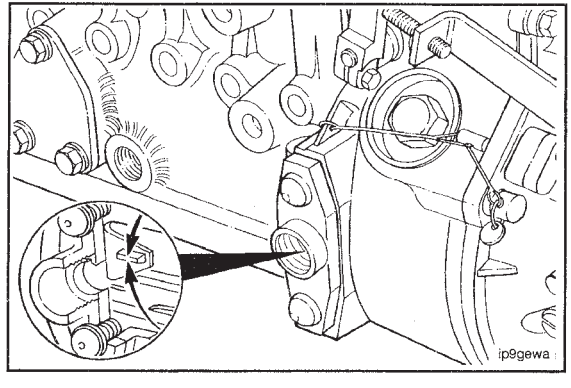

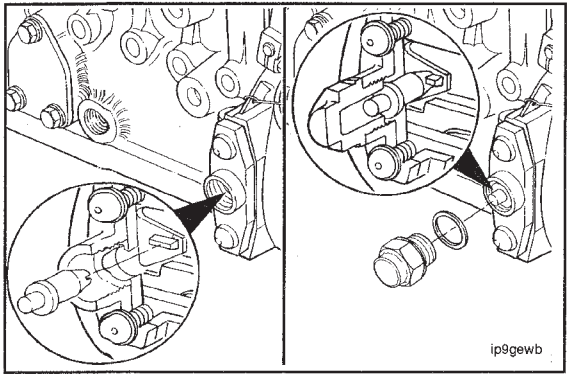

Reverse the position of the pin so the slot of the pin will fit over the timing tooth in the pump.

Install and secure the pin with the access plug.

⚠ CAUTION ⚠

The fuel pump drive inside diameter and the shaft outside diameter must be clean and dry before installing the shaft into the gear. A nonpetrolum-based cleaner can be used to clean the drive gear and shaft mounting surfaces. Failure to do so will result in gear slippage in the retarded direction.

Clean the drive gear and shaft with a nonpetrolum-based cleaner.

NOTE: If the mounting flange o-ring has a colored stripe, it can **not** be reused. Replace with a new o-ring. Furthermore, do **not** lubricate the new-type o-ring. Instead, lubricate the seating area of the gear housing.

Lubricate the mounting flange of the fuel injection pump with clean lubricating engine oil.

NOTE: The P7100 fuel injection pump driveshaft has a provision for a Woodruff key; however, it is **not** required for the P7100 drive gear.

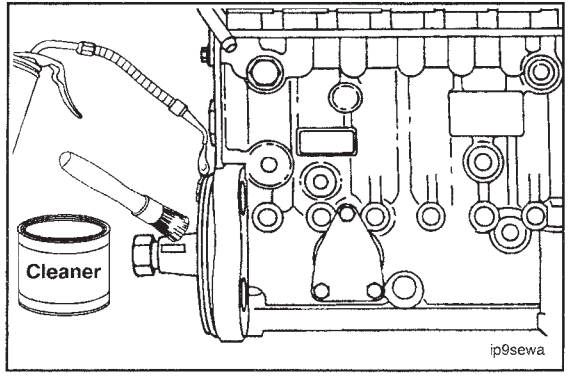

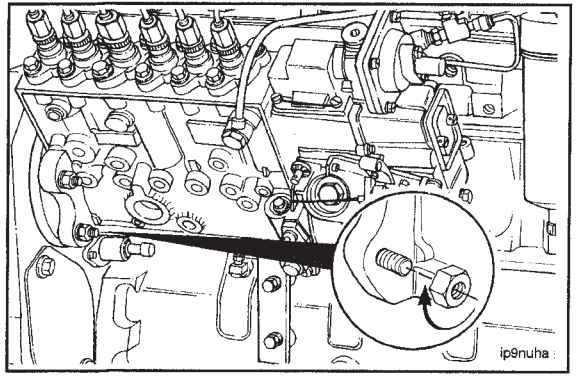

Slide the pump shaft through the drive gear, and position the pump flange onto the mounting studs.

Push the pump forward until the mounting flange and o-ring are properly fitted into the gear housing bore.

If equipped, finger-tighten the capscrews for the support bracket.

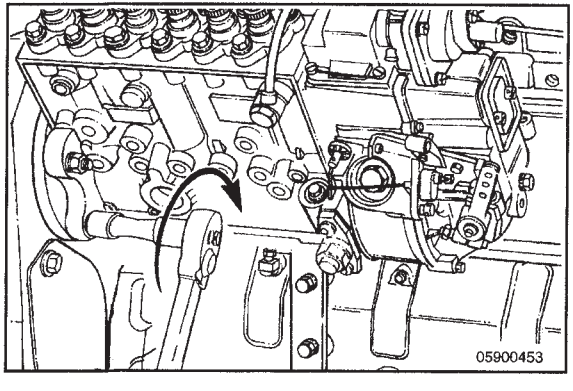

15 mm

Tighten the mounting nuts.

Tighten the capscrews for the rear support bracket.

Torque Value: Mounting Nuts

44 N•m [32 ft-lb]

Torque Value: Support Bracket

14 N•m [124 in-lb]

22 mm (A Pump), 30 mm (P Pump)

Install the fuel injection pump retaining nut and washer.

Torque Value: 10 to 15 N•m [89 to 133 in-lb]

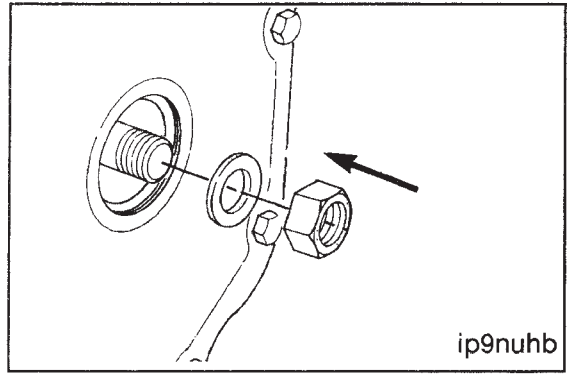

Disengage the engine timing pin.

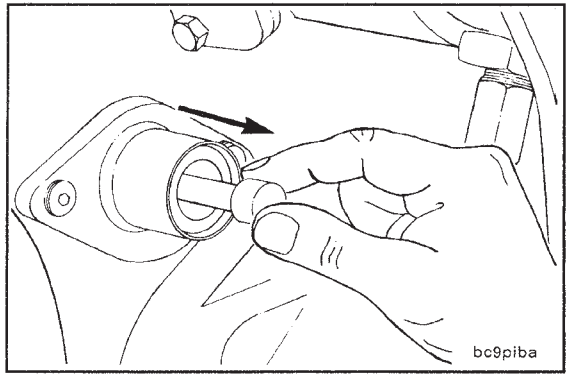

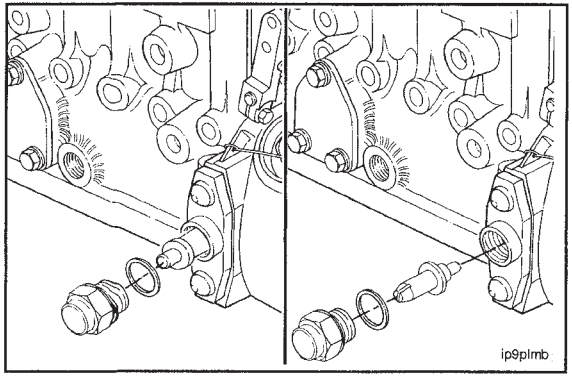

24 mm

Remove the fuel pump timing pin plug. Reverse the position of the pin and install the pin, plug, and sealing washer.

Torque Value: 24 N•m [18 ft-lb]

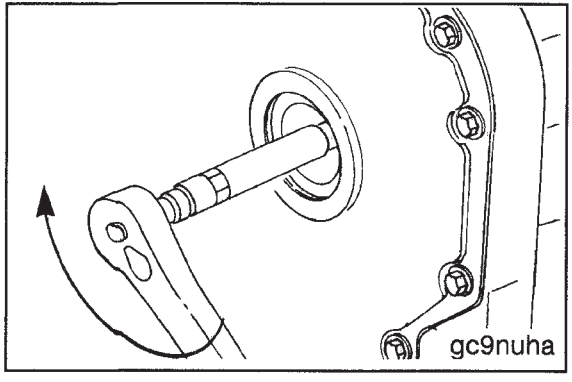

22 mm or 27 mm

Tighten the fuel pump drive nut.

Torque Value: P7100 Pump

178 N•m [131 ft-lb]

Torque Value: A Pump

95 N•m [70 ft-lb]

Torque Value: EP9 Pump

127 N•m [94 ft-lb]

Install the gear cover access cap hand-tight.

10 mm

Install the fuel pump mounting bracket capscrews finger-tight.

Install support mounting capscrews finger-tight.

Make sure alignment is correct and tighten capscrews.

Torque Value: 24 N•m [18 ft-lb]

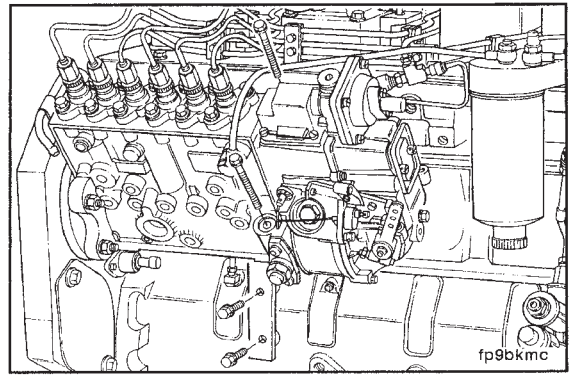

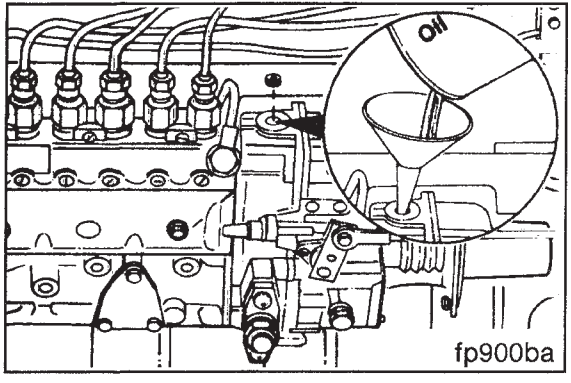

⚠ CAUTION ⚠

If a replacement or repaired pump was installed, be sure to fill the governor housing with clean lubricating engine oil before starting the engine. Failure to do so will result in damage to the governor fly weights.

Remove the access plug, and fill the governor housing with clean lubricating engine oil using specifications in the table below.

Oil Capacity	
RQVK Governor	750 ml [0.71 qt]
RQV Governor	750 ml [0.71 qt]
RSV Governor	450 ml [0.48 qt] Bosch
RSV-H Governor	500 ml [0.53 qt] Denso

Install the access plug.

Torque Value: 28 N•m [21 ft-lb]

Fuel Pump

Adjust

Idle Speed Adjustment, RQVK Governor

10-mm Screwdriver and Tachometer

Idle adjustment for the RQVK governor requires setting of the idle adjustment screw.

Loosen the locknut and turn the screw **counterclockwise** to raise the rpm; **clockwise** to decrease idle speed until the dataplate-specified idle speed is attained with normal idle operation accessory loads (i.e., transmission, hydraulic, air conditioning). Tighten the lock screw.

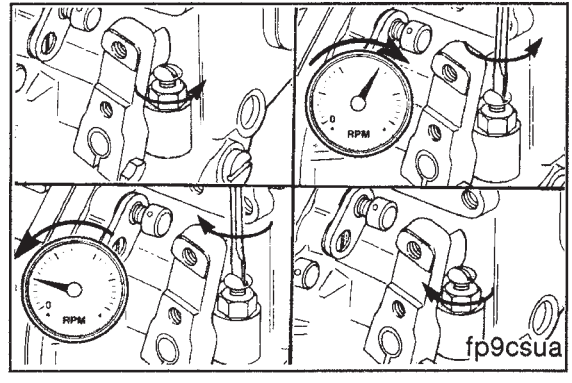

RSV Governor

Idle adjustment for industrial engines requires the setting of both the low-idle screw (1) and the bumper spring screw (2).

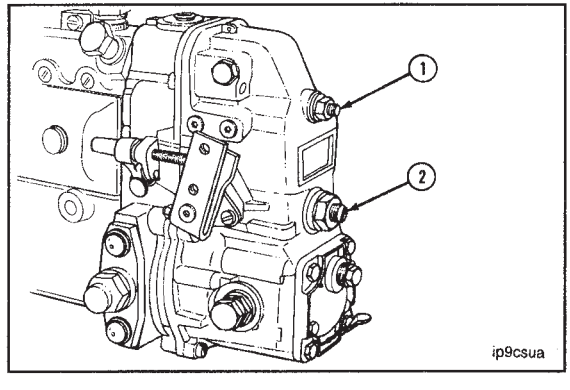

Air Intake System - Overview

General Information

Air System Repair Summary

Component to be Replaced	Tools	Preparatory Steps*
Air Crossover Tubing	8-mm socket, screwdriver, torque wrench	
Intake Manifold Cover and Gasket	10-mm socket	Remove high-pressure fuel lines; disconnect cold starting aid, if used, and air crossover tubing.
Aftercooler Gasket	8 -mm and 10-mm sockets	Disconnect cold starting aid if used; remove air cross-over tube and drain coolant.
Turbocharger and Gasket	10-mm, 15-mm, 16-mm, and 7/16-inch wrenches	Disconnect intake and exhaust piping and remove crossover tubing.
Exhaust Manifold and Gasket	15-mm socket	Disconnect intake and exhaust piping; remove air crossover tube and remove the turbocharger.

*Removal of some chassis parts is sometimes necessary to gain access to some engine components. Follow the equipment manufacturer's procedures and precautions for removing chassis parts.

Air Crossover

Remove

8 mm or Screwdriver

Loosen the hose clamps, and position the hose so the crossover tube can be removed.

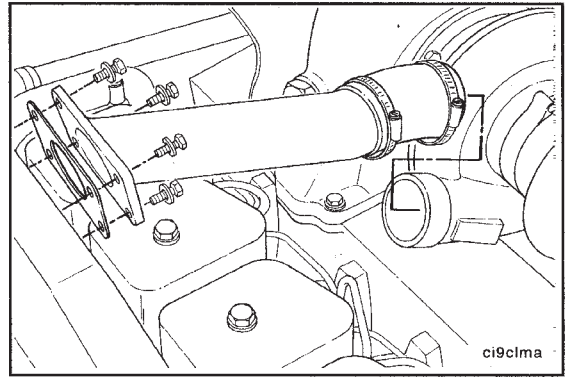

Install

8 mm or Screwdriver

Use new hose and clamps as required to install the crossover tube.

Torque Value: 8 N•m [71 in-lb]

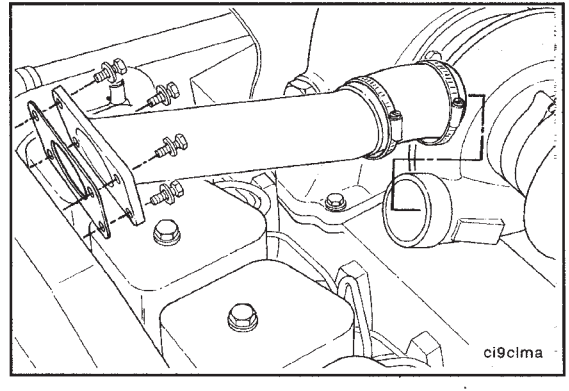

Aftercooler

Preparatory

⚠ WARNING ⚠

Coolant is toxic. Keep away from children and pets. If not reused, dispose of in accordance with local environmental regulations.

- Disconnect the cold starting aid, if used
- Remove the air crossover tube
- Remove the high-pressure fuel lines
- Drain 2 liters [2.1 qt] of coolant.

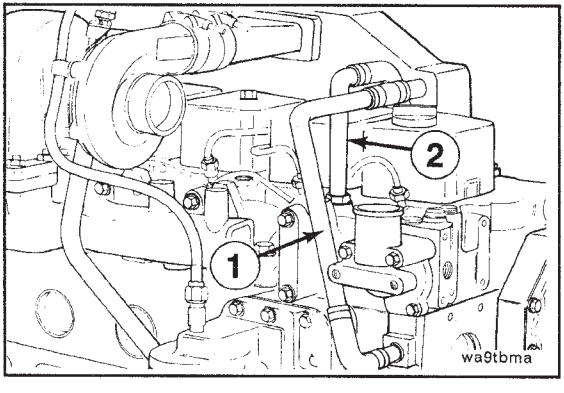

Remove

8 mm

Remove the coolant supply tube (1) and the coolant return tube (2).

Remove the high-pressure fuel lines.

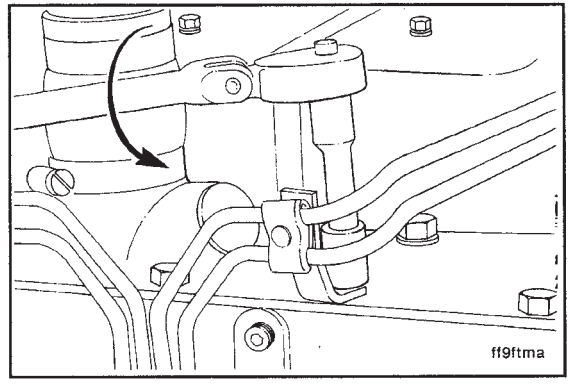

10 mm

Remove the aftercooler housing and gasket.

Plug the opening with a clean shop rag to prevent foreign material from entering the air intake.

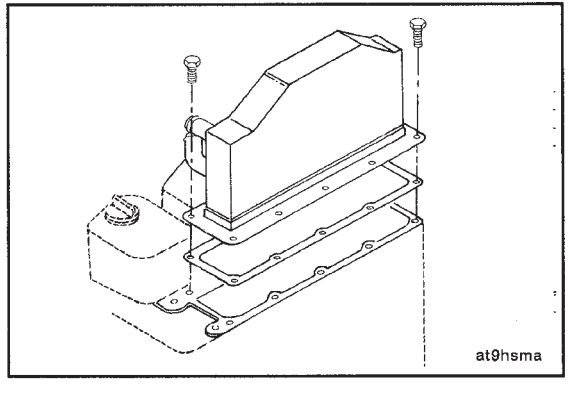

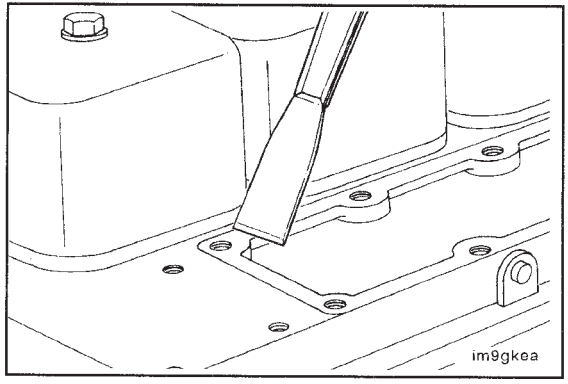

Clean

Clean the sealing surface.

NOTE: Keep the gasket material and any other material out of the air intake.

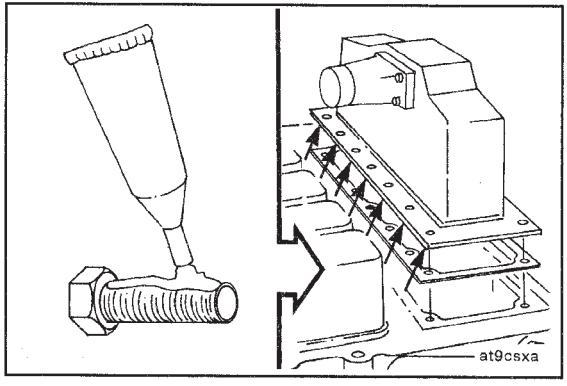

Install

10 mm

NOTE: The holes shown in the illustration are drilled through. Apply liquid Teflon™ sealant to the capscrews.

Install the aftercooler housing and a new gasket.

Torque Value: 24 N•m [18 ft-lb]

8 mm

Install the coolant supply tube (1) and coolant return tube (2). Install the air crossover tube (3).

Torque Value: 8 N•m [71 in-lb]

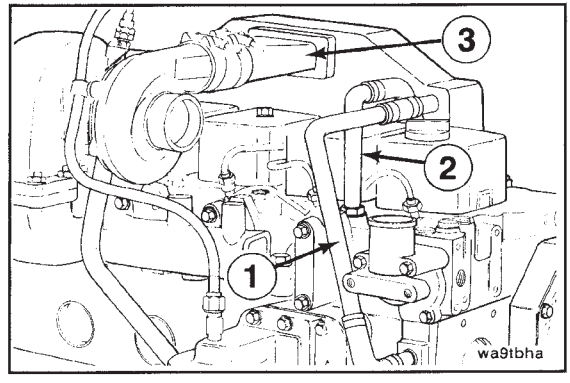

Fill

⚠ CAUTION ⚠

During filling, air must be vented from the engine cooling passages. Open the engine vent petcock. Make sure to open the petcock on the aftercooler for aftercooled engines. The system must be filled slowly to prevent air locks. Wait 2 to 3 minutes to allow air to be vented; then add coolant to bring the level to the bottom of the radiator filler neck. Failure to do so will cause entrapment of air in cooling system and will cause engine to overheat.

Fill the coolant system with a premixture of 50-percent water and 50-percent ethylene-glycol-type antifreeze.

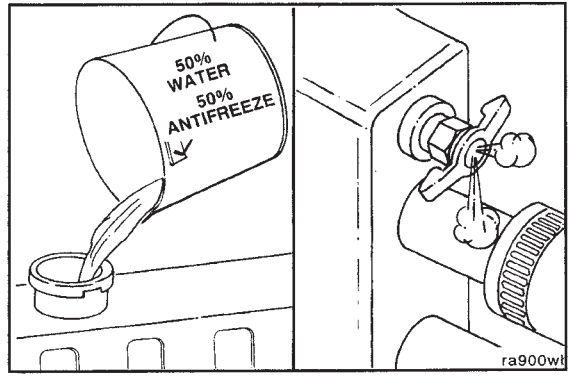

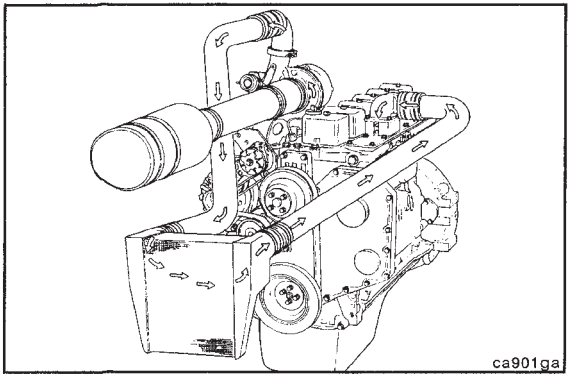

Charge-Air Cooler (CAC)

Leak Test

NOTE: The long-term integrity of the charge air cooler system is the responsibility of the vehicle and component manufacturers; however, the following symptoms can be checked by any Cummins Authorized Repair Location.

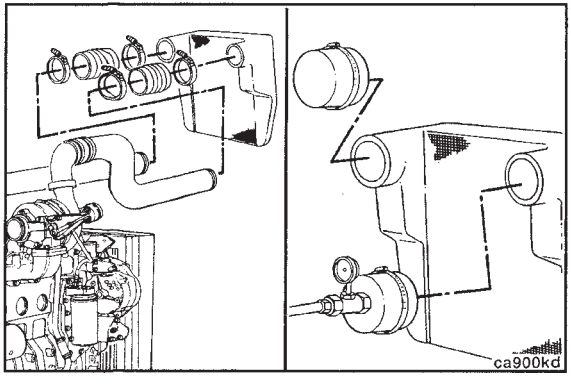

To check the charge air cooler for cracked tubes or header, remove the inlet and outlet hoses from the cooler.

Remove the charge air cooler.

Install a cap over the outlet side of the cooler. Install a pressure gauge and a shop air supply line to the inlet side of the cooler.

Pressure Test

Apply 276 kPa [40 psi] of air pressure to the cooler. If the pressure drop is 35 kPa [5 psi] or less in 15 seconds, the cooler is okay.

If the pressure drop is greater than 35 kPa [5 psi] in 15 seconds, the charge air cooler **must** be repaired or replaced. Refer to the charge air cooler manufacturer for repair instructions.

NOTE: A leak tank can be used to locate the air leak.

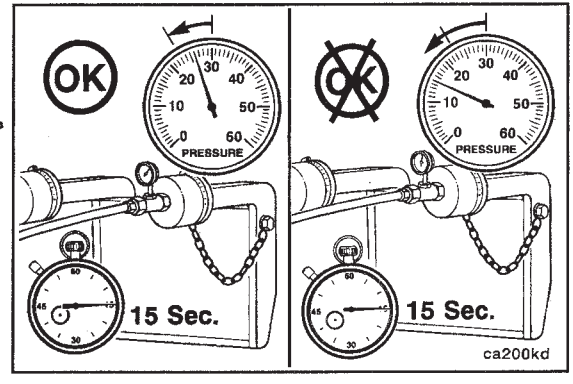

Air Intake Manifold

Preparatory

- Remove the high-pressure fuel lines
- Disconnect the cold starting aid, if used.
- Remove the air crossover tube (industrial).

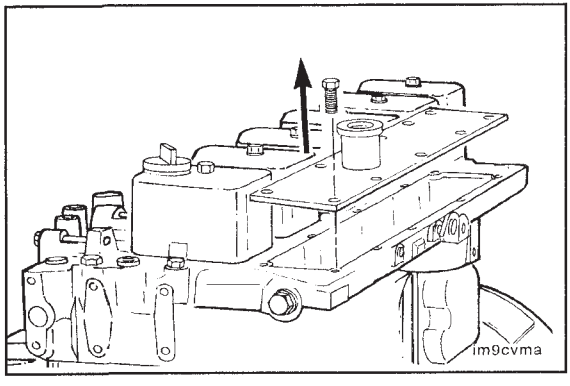

Remove

10 mm

Remove the manifold cover and gasket.

NOTE: Plug the opening of the air intake with a clean shop rag to prevent foreign matter from entering combustion chamber.

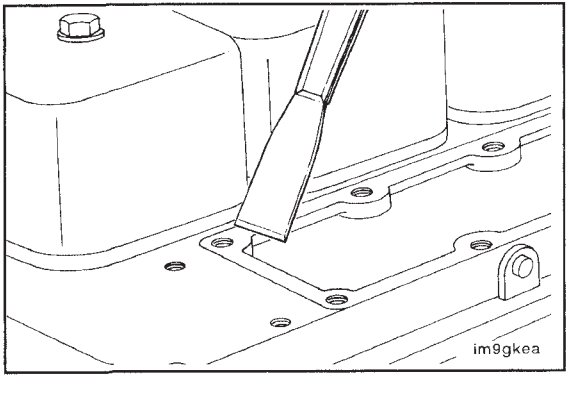

Clean

Clean the sealing surface.

NOTE: Keep the gasket material and any other material out of the air intake.

Install

NOTE: The holes shown in the illustration are drilled through and **must** be sealed by applying liquid Teflon™ sealant to the capscrews.

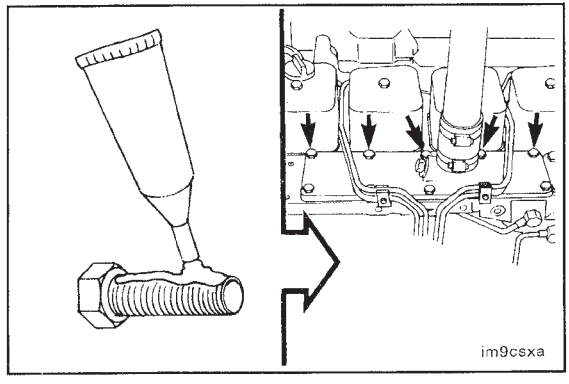

10 mm

Install the cover and a new gasket.

Torque Value: 24 N•m [18 ft-lb]

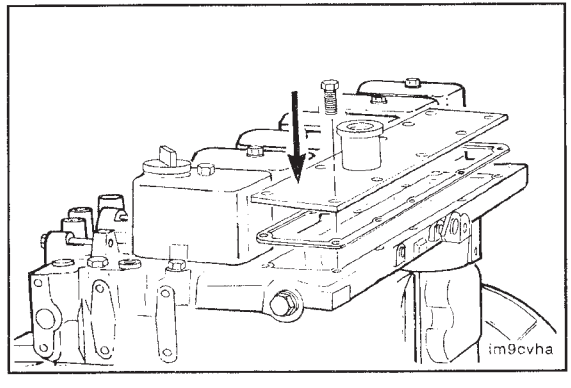

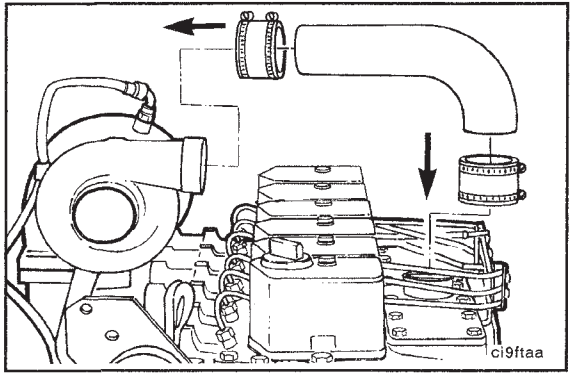

Assemble the intake piping, and connect the cold starting aid if used.

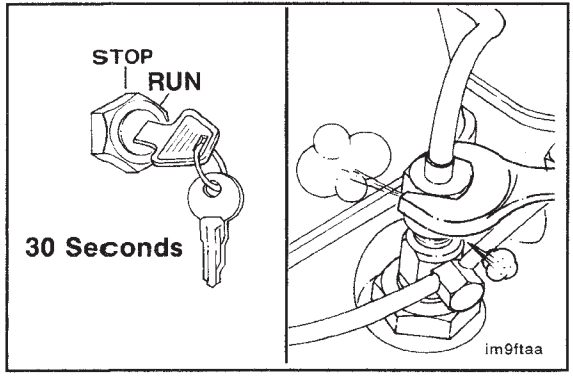

Vent

⚠ WARNING ⚠

Do not mix gasoline, alcohol, or gasohol with diesel fuel. This mixture can cause explosion.

Install and bleed the high-pressure fuel lines.

Pressure Test

Pressure Gauge, Part No. ST-1273

Install the pressure gauge, Part No. ST-1273, to the fitting in the turbocharger outlet.

Install another pressure gauge, Part No. ST-1273, in the intake manifold.

Operate the engine at rated rpm and load. Record the readings on the two gauges.

If the differential pressure is greater than 21 kPa [3 psi], Check the charge air cooler for plugging. Clean or replace if necessary.

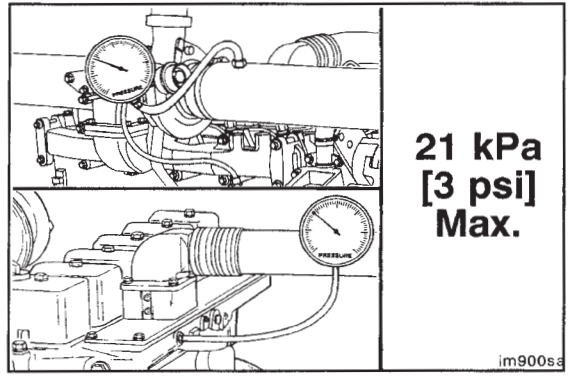

Temperature Differential Test

Install a temperature gauge in the intake manifold.

Lock the fan drive in the ON mode to prevent erratic test results. This can be done by installing a jumper across the temperature switch or supplying shop air to the fan. Refer to the fan drive manufacturer for lockup procedure.

NOTE: Some trucks have a manual switch that will lock on the fan.

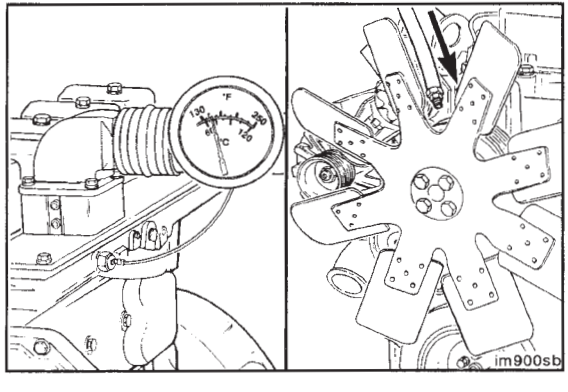

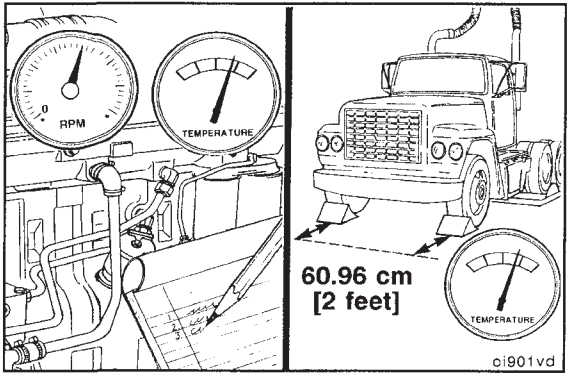

Operate the engine at rate rpm and load. Record the intake manifold temperature.

Measure the ambient temperature at least 2 feet in front of the vehicle.

The maximum temperature differential **must not** be greater than 25°C [45°F].

If the temperature differential is greater than 25°C [45°F], check the charge air cooler for dirt and debris on the fins, and clean as necessary. If the problem still exists, check the cooler for internal contamination or plugging.

Turbocharger

Preparatory

- Remove the air crossover tube.
- Disconnect the intake and exhaust piping.

Remove

10 mm

Remove the capscrews from the oil drain tube.

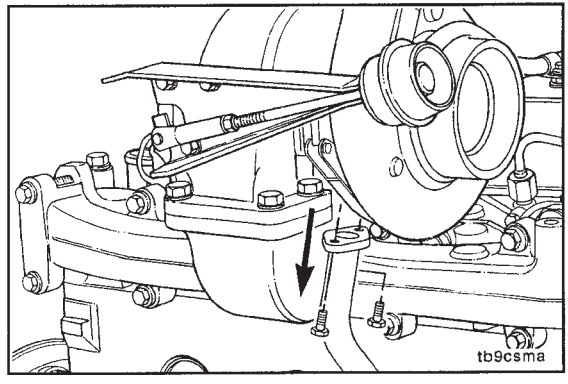

16 mm

Remove the oil supply line.

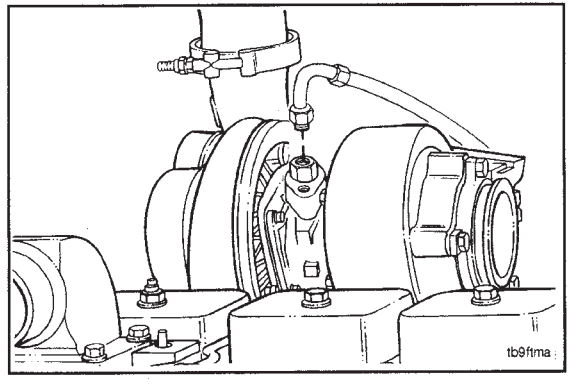

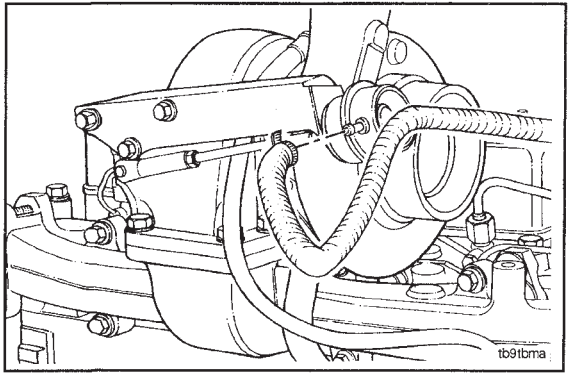

If equipped with a wastegate turbocharger, remove the intake manifold pressure supply line from the boost capsule.

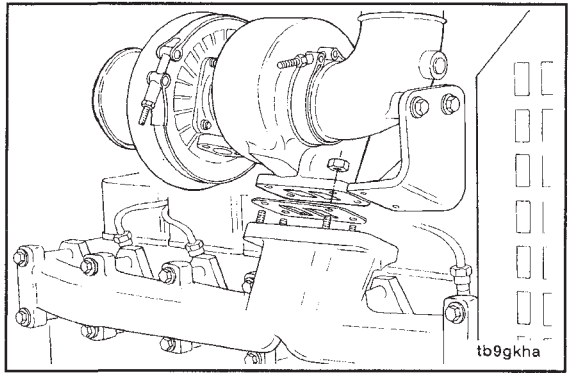

15 mm and 11 mm

Remove the exhaust clamp, turbocharger, and gasket.

Plug the opening with a clean shop rag to prevent foreign material from entering exhaust system.

Clean

Clean the sealing surface. Inspect the sealing surface and mounting studs for damage.

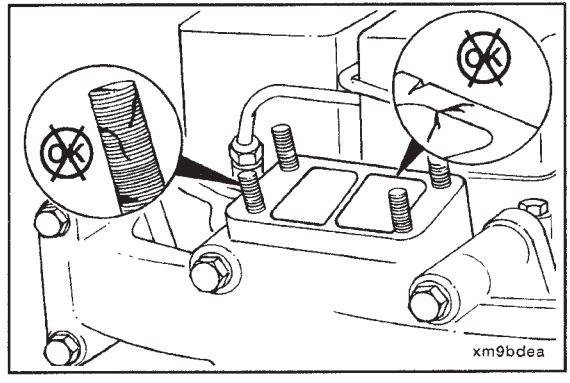

Install

NOTE: If the turbocharger is **not** to be immediately replaced, cover the opening to prevent any material from falling into the manifold.

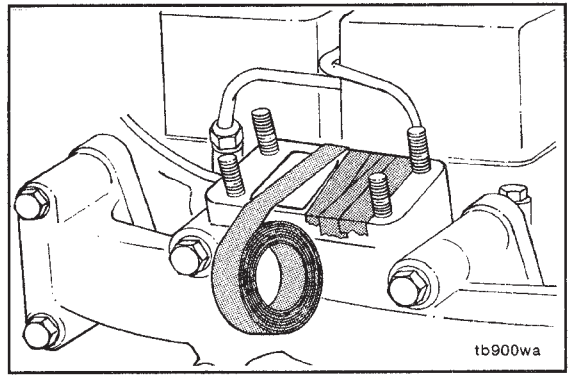

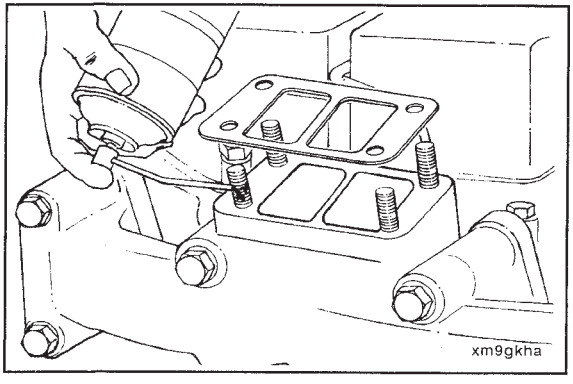

Install a new gasket and apply anti-seize compound to the mounting studs.

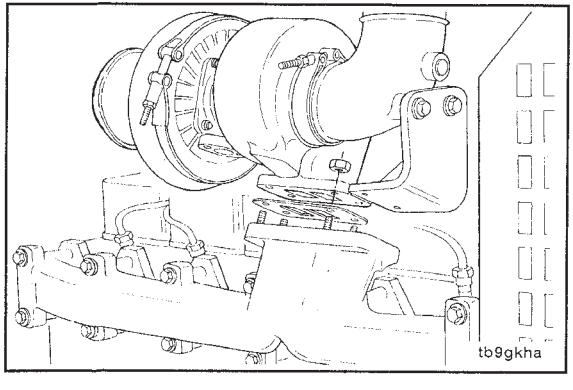

15 mm

Install the turbocharger and a new gasket.

Torque Value: 43 N•m [32 ft-lb]

13 mm

If required, bend the lockplates back and loosen the turbine housing capscrews. Position the bearing housing to install the turbocharger drain tube.

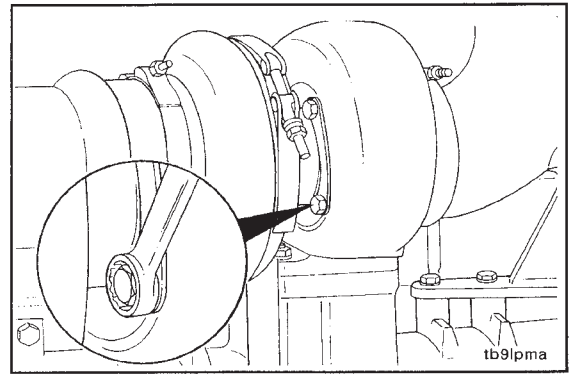

13 mm

Install the hose and clamps on the turbocharger drain tube loosely. Install the drain tube and gasket on the turbocharger.

Torque Value: 24 N•m [18 ft-lb]

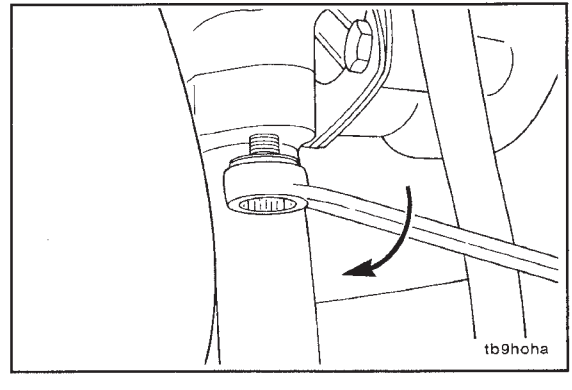

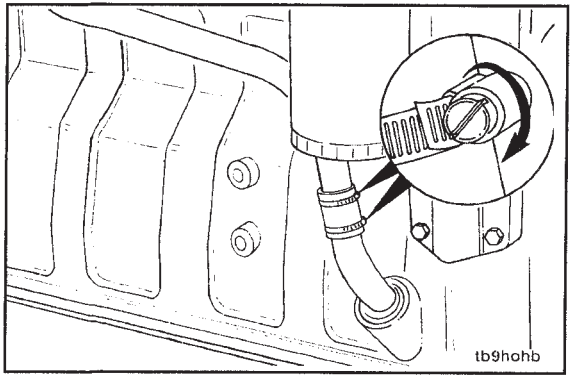

Screwdriver

Position the turbocharger drain hose to connect the drain tubes; tighten the clamps.

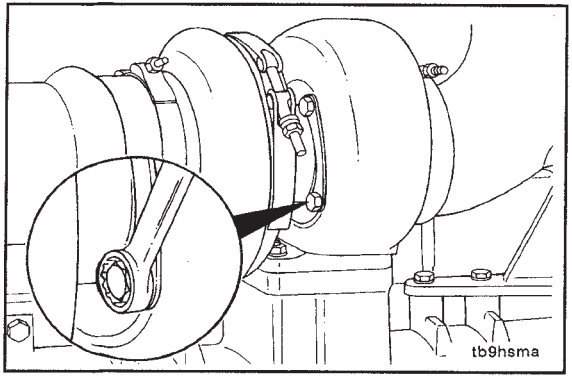

13 mm, Punch, Hammer

If loosened, tighten the turbine housing capscrews. Bend the lockplates onto the flats to prevent loosening.

Torque Value: 20 N•m [15 ft-lb]

10 mm

If required, loosen the compressor housing, and position the housing to align with the crossover tube.

Torque Value: 9 N•m [80 in-lb]

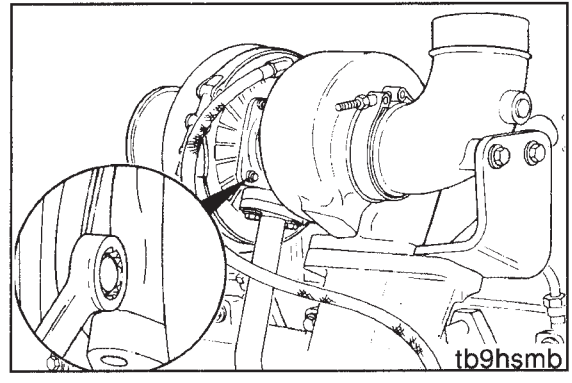

11 mm, Plastic Hammer

Tighten the band clamp. Tap around the clamp with a plastic hammer and tighten again.

Torque Value: 9 N•m [80 in-lb]

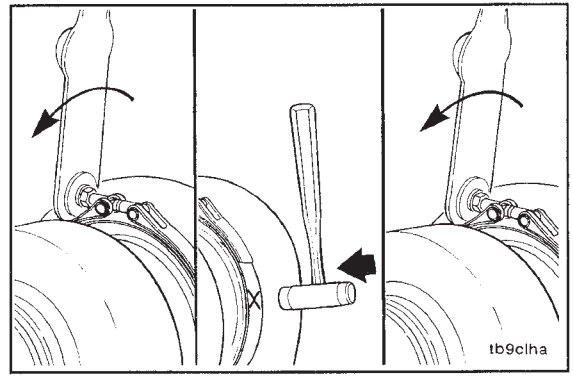

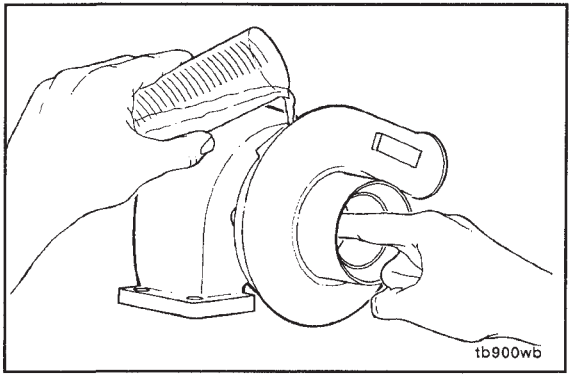

⚠ CAUTION ⚠

To prevent bearing damage, new turbochargers must be prelubricated before start-up.

Pour 50 to 60 cc [3 to 4 oz] of clean lubricating engine oil into the oil supply fitting. Rotate the turbine wheel to allow the oil to enter the bearing housing.

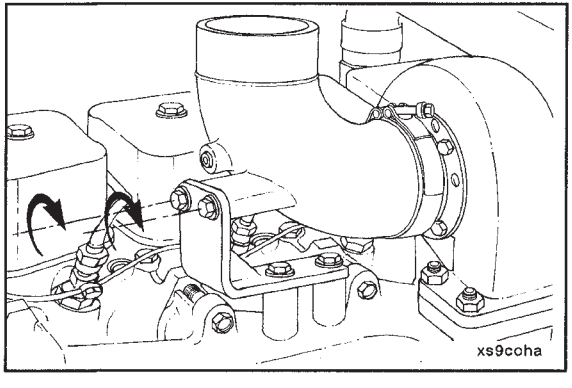

Install the exhaust outlet connection.

Do **not** tighten the two mounting capscrews until the band clamp has been tightened.

Torque Value: Band Clamp

8 N•m	[71 in-lb]

Torque Value: Capscrews

43 N•m	[32 ft-lb]

⚠ CAUTION ⚠

When installing the oil supply line, be sure the line is not in direct contact with the turbine housing or the line will burn during operation.

16 mm

Install the oil supply line.

Torque Value: 35 N•m [26 ft-lb]

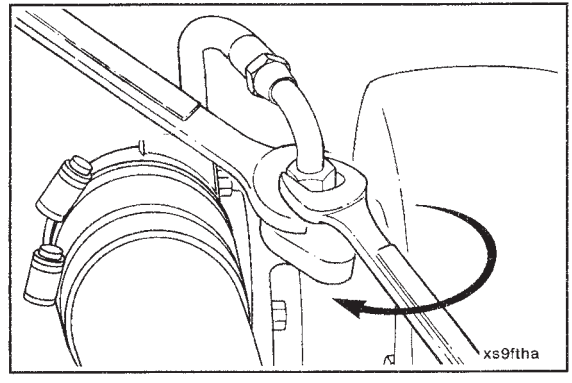

If equipped with a wastegate turbocharger, install the intake manifold pressure supply line from the boost capsule.

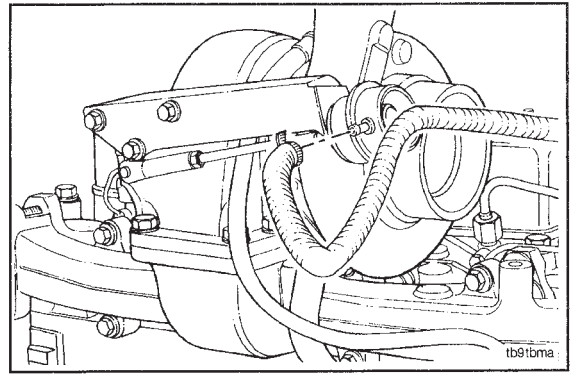

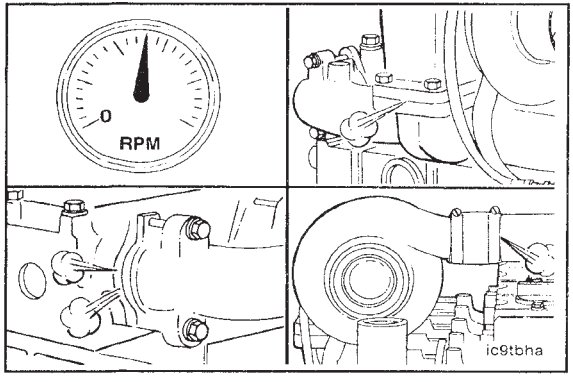

Test

Install the air crossover tube, inlet, and exhaust piping.

Operate the engine and check for leaks.

Exhaust Manifold, Dry

Preparatory

- Remove the air crossover tube
- Disconnect the air intake and exhaust piping
- Remove the turbocharger, if used.

Remove

15 mm, 13 mm

Remove the exhaust manifold.

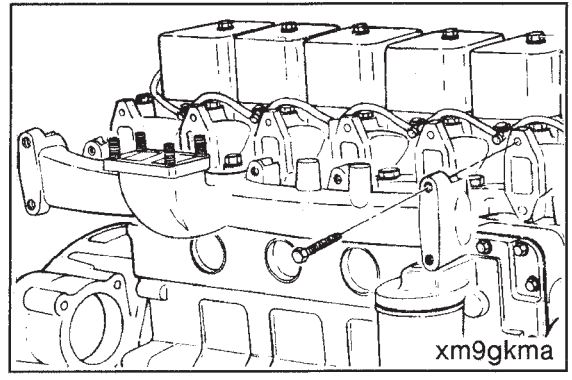

Clean

Clean the sealing surfaces.

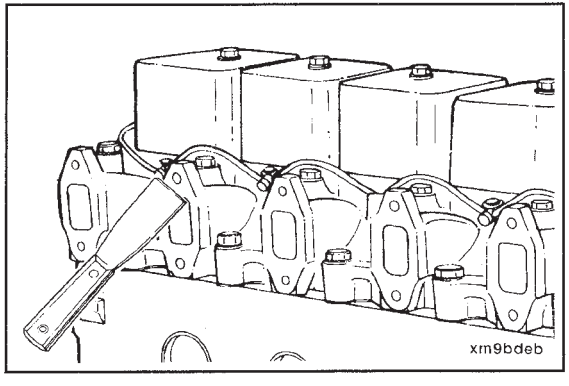

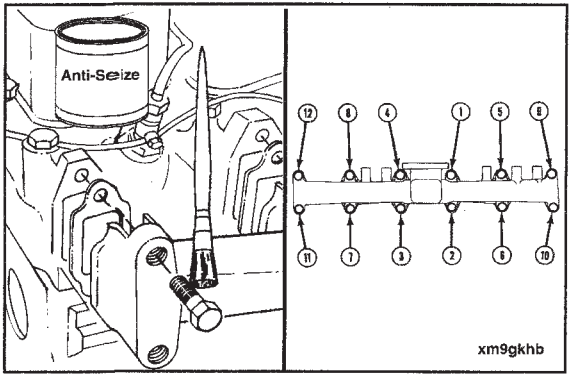

Install

15 mm, 13 mm

Apply anti-seize compound on exhaust manifold bolt threads.

Install the exhaust manifold and new gaskets.

Follow the tightening sequence shown in the illustration. Then, follow the same sequence, and tighten to the same torque values.

Torque Value: 43 N•m [32 ft-lb]

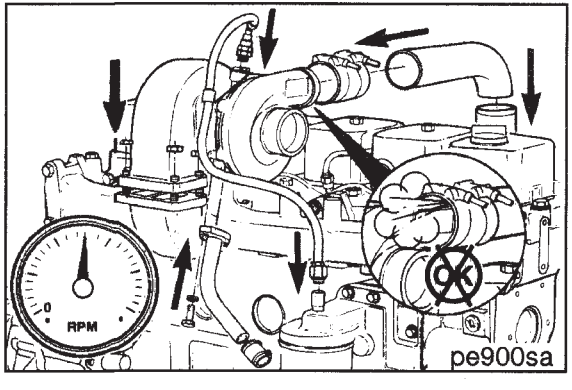

Install the parts previously removed. Operate the engine and check for leaks.

Lubricating Oil System - Overview

General Information

Lubricating System Repair Summary

⚠ WARNING ⚠

Some state and federal agencies have determined that used engine oil can be carcinogenic and cause reproductive toxicity. Avoid inhalation of vapors, ingestion, and prolonged contact with used engine oil.

Component to Be Replaced	Tools	Preparatory Steps
Oil Pressure Regulator Valve and/or Spring	Ratchet, 19-mm Socket and Torque Wrench	Clean debris.
Oil Cooler Element and/or Gaskets	16-mm Wrench, Ratchet, 10-mm Socket and Torque Wrench	Drain coolant. Remove the oil filter.

Lubricating Oil Pressure Regulator (Main Rifle)

Preparatory

- Clean debris.

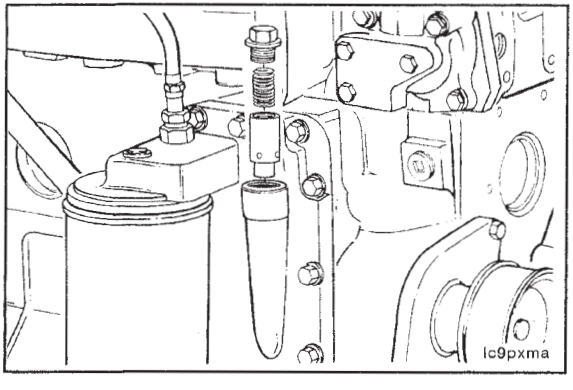

Remove

19 mm

Remove the plug and regulator valve.

Clean

Clean and inspect the regulator valve.

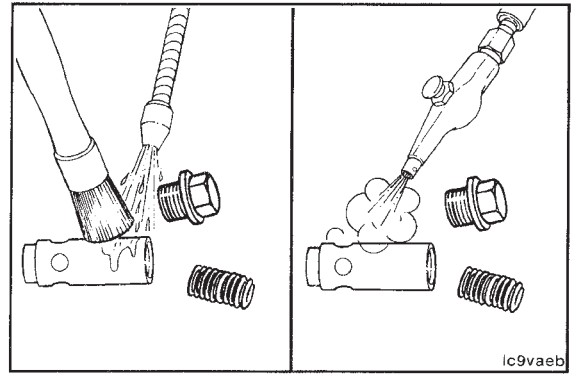

Clean and inspect the regulator valve bore.

NOTE: In order to regulate the oil pressure, the valve **must** move freely in the bore.

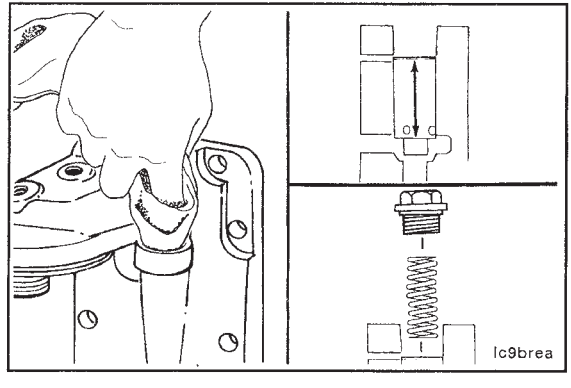

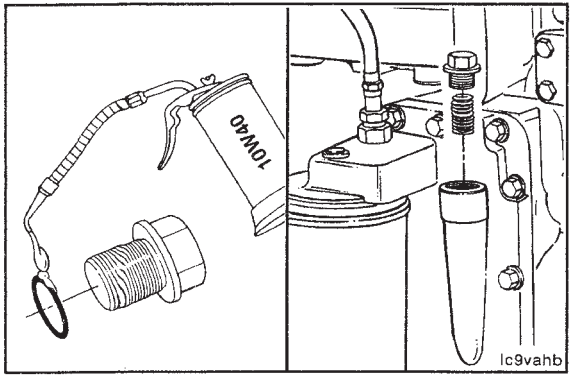

Install

Install a new sealing o-ring on the threaded plug and lubricate with clean lubricating engine oil. Install the pressure regulator assembly.

Torque Value: 80 N•m [59 ft-lb]

Lubricating Oil Cooler

Preparatory

⚠ WARNING ⚠

Coolant is toxic. Keep away from children and pets. If not reused, dispose of in accordance with local environmental regulations.

⚠ WARNING ⚠

Some state and federal agencies have determined that used engine oil can be carcinogenic and cause reproductive toxicity. Avoid inhalation of vapors, ingestion, and prolonged contact with used engine oil.

- Drain the coolant.
- Remove the oil filter.

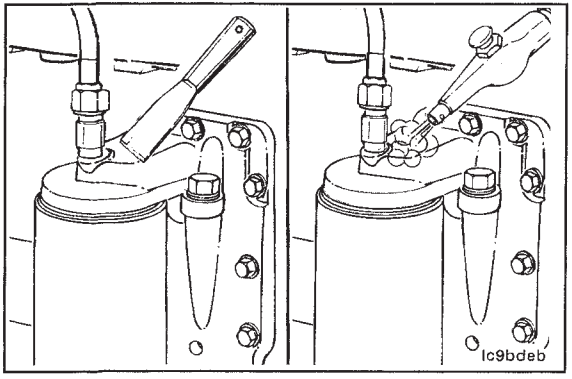

Clean

Clean all debris from around the oil cooler.

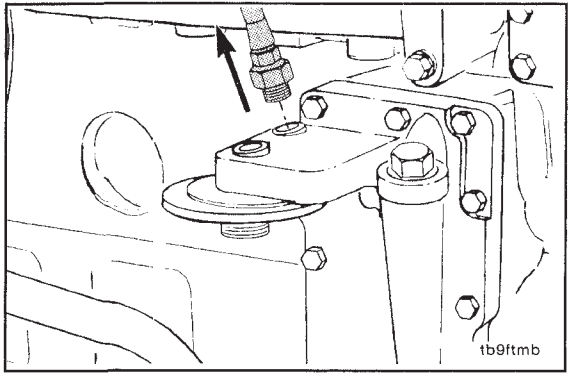

Remove

16 mm

Remove the turbocharger oil supply line from the oil filter head.

Remove the oil cooler cover, element, and gaskets.

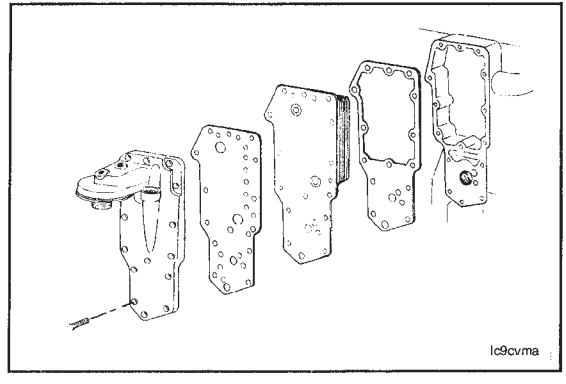

Clean the sealing surfaces.

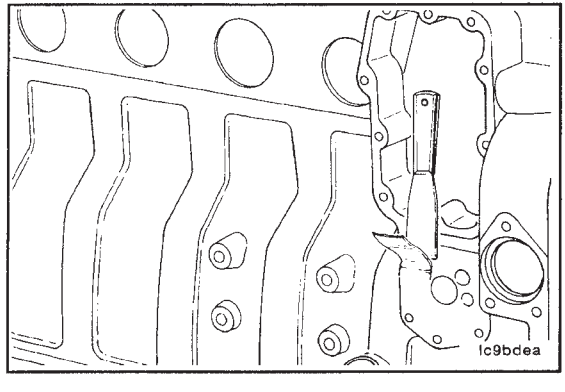

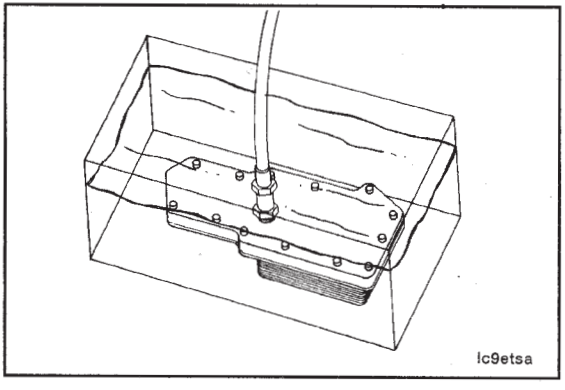

Pressure Test

Pressurize the element to 690 kPa [100 psi] to check it for leaks.

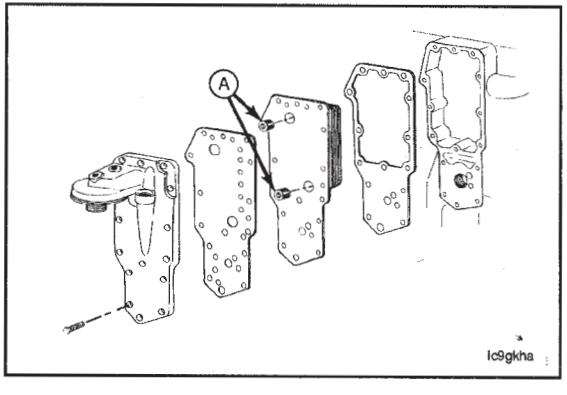

Install

10 mm

Assemble the oil cooler gasket, element, cooler cover gasket, and cooler cover to the cylinder block.

NOTE: Be sure to remove the shipping plugs (A) from the new cooler element.

Torque Value: 24 N•m [18 ft-lb]

16 mm

Connect the turbocharger oil supply line.

Torque Value: 35 N•m [26 ft-lb]

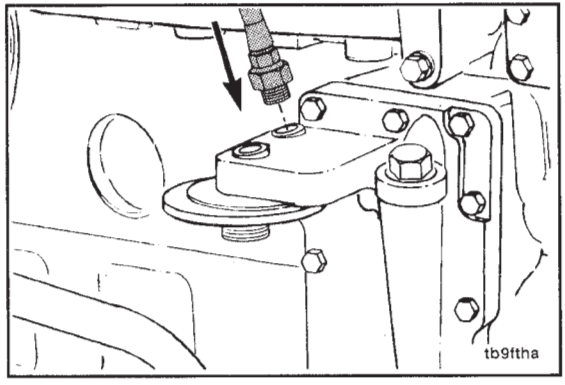

Install a new oil filter.

Follow the manufacturer's instructions for tightening.

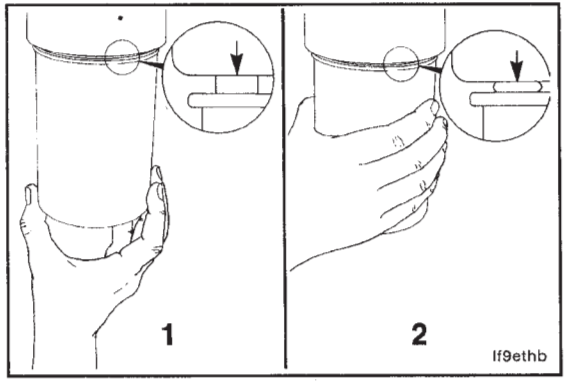

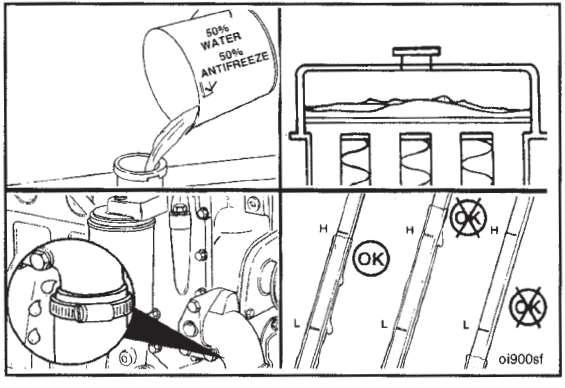

Fill

△ CAUTION △

The system must be filled slowly to prevent air locks. Be sure to open the aftercooler to allow air to escape as the system is filled.

Fill the coolant system and lubricating oil system. Operate the engine to check for leaks.

Stop the engine and check the coolant and oil level.

Electrical Equipment - Overview

General Information

Electrical System Repair Summary

⚠ WARNING ⚠

Batteries can emit explosive gases. To avoid injury, always ventilate the compartment before servicing the batteries. To avoid arcing, remove the negative (-) battery cable first and attach the negative (-) battery cable last.

⚠ WARNING ⚠

Acid is extremely dangerous and can damage the machinery and can also cause serious burns. Always provide a strong tank of soda water as a neutralizing agent when servicing the batteries. Wear goggles and protective clothing to avoid serious burns.

Component to Be Replaced	Tools	Preparatory Steps
Starting Motor	Ratchet, 17-mm socket, 14-mm wrench, and torque wrench	Disconnect ground (-) cable to battery.
Alternator	Ratchet, 8-mm, 14-mm, and 16-mm socket, torque wrench, and 1/2-drive breaker bar	Disconnect ground (-) cable to battery and remove drive belt.

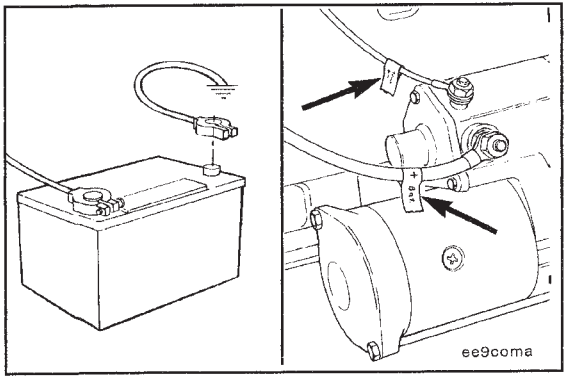

Starting Motor

Remove

Disconnect the ground (-) cable from the battery.

Identify each electrical wire with a tag indicating location.

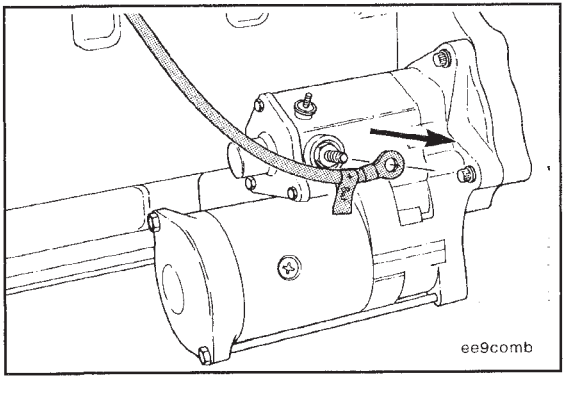

14 mm

Remove the battery cable from the solenoid.

10 mm

Remove the starting motor.

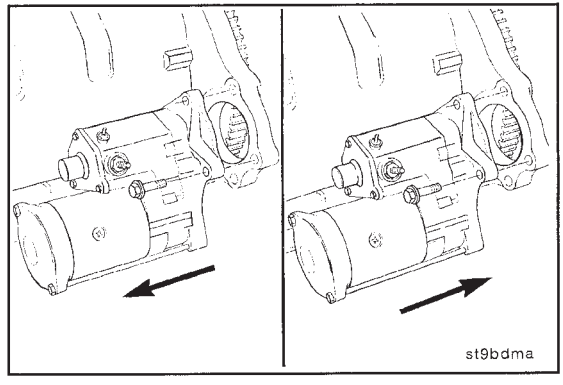

Install

10 mm

Install the starting motor in the reverse order of removal.

Torque Value: 43 N•m [32 ft-lb]

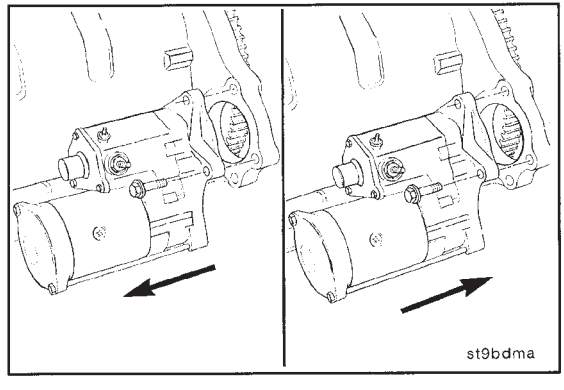

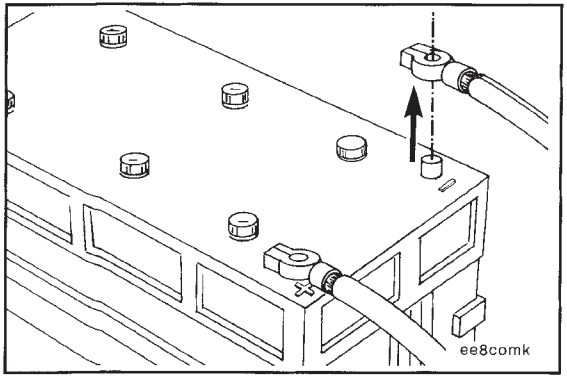

Alternator

Remove

Disconnect the ground (-) cable from the battery terminal.

Identify each electrical wire with a tag indicating location.

Remove the drive belt.

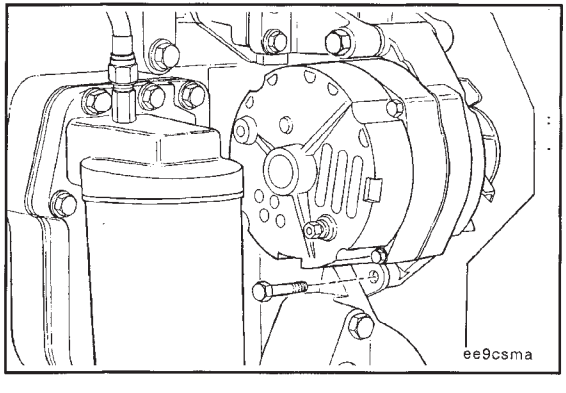

14 mm

Remove the capscrew from the alternator link.

16 mm

Remove the alternator mounting screws.

Remove the alternator.

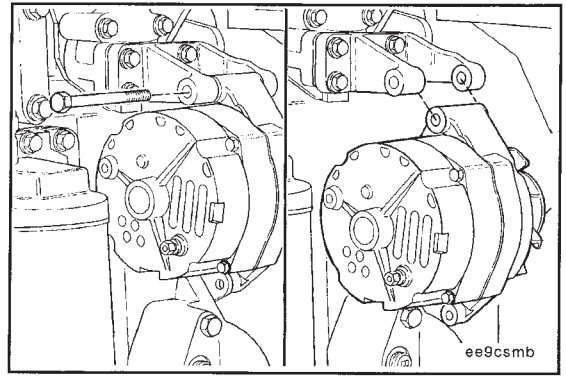

Install

Position the alternator on the bracket, and secure it with the mounting capscrews.

Do **not** tighten at this time.

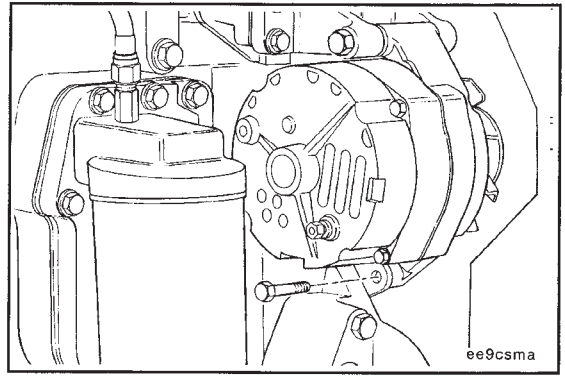

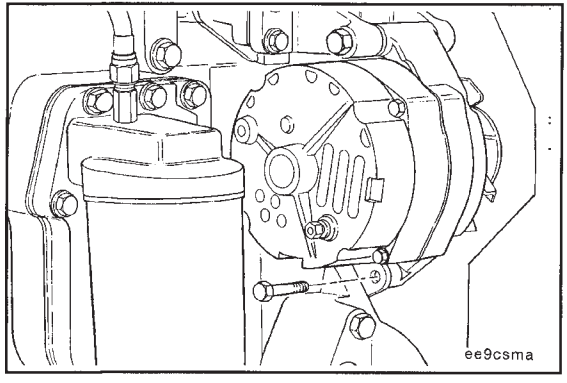

Connect the alternator link to the alternator. Finger-tighten the capscrews.

NOTE: Make sure the alternator link is properly positioned for correct belt alignment.

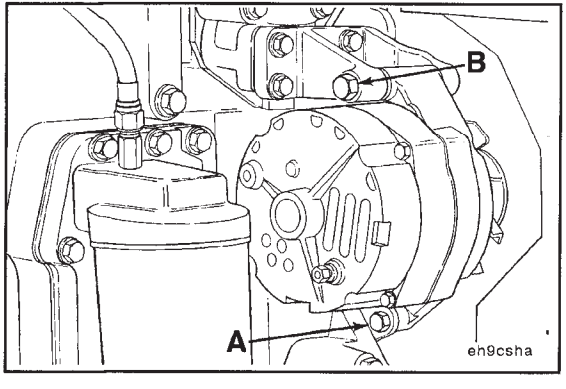

14 mm, 16 mm

Tighten the alternator mounting capscrews.

Torque Value: A

24 N•m	[18 ft-lb]

Torque Value: B

43 N•m	[32 ft-lb]

Section D - System Diagrams

Section Contents

	Page
Flow Diagram, Air Intake System	D-14
General Information	D-14
Flow Diagram, Compressed Air System	D-26
General Information	D-26
Flow Diagram, Cooling System	D-12
General Information	D-12
Flow Diagram, Exhaust System	D-20
General Information	D-20
Flow Diagram, Fuel System	D-2
General Information	D-2
Flow Diagram, Lubricating Oil System	D-6
General Information	D-6
System Diagrams - Overview	D-1
General Information	D-1






THIS PAGE LEFT INTENTIONALLY BLANK









System Diagrams - Overview

General Information

The following drawings show the flow through the engine systems. Although parts can change between different applications and installations, the flow remains the same. The systems shown are:

- Fuel System
- Lubricating Oil System
- Coolant System
- Intake Air System
- Exhaust System
- Compressed Air System.

Knowledge of the engine systems can help you in troubleshooting, service, and general maintenance of your engine.

Flow Diagram, Fuel System

General Information

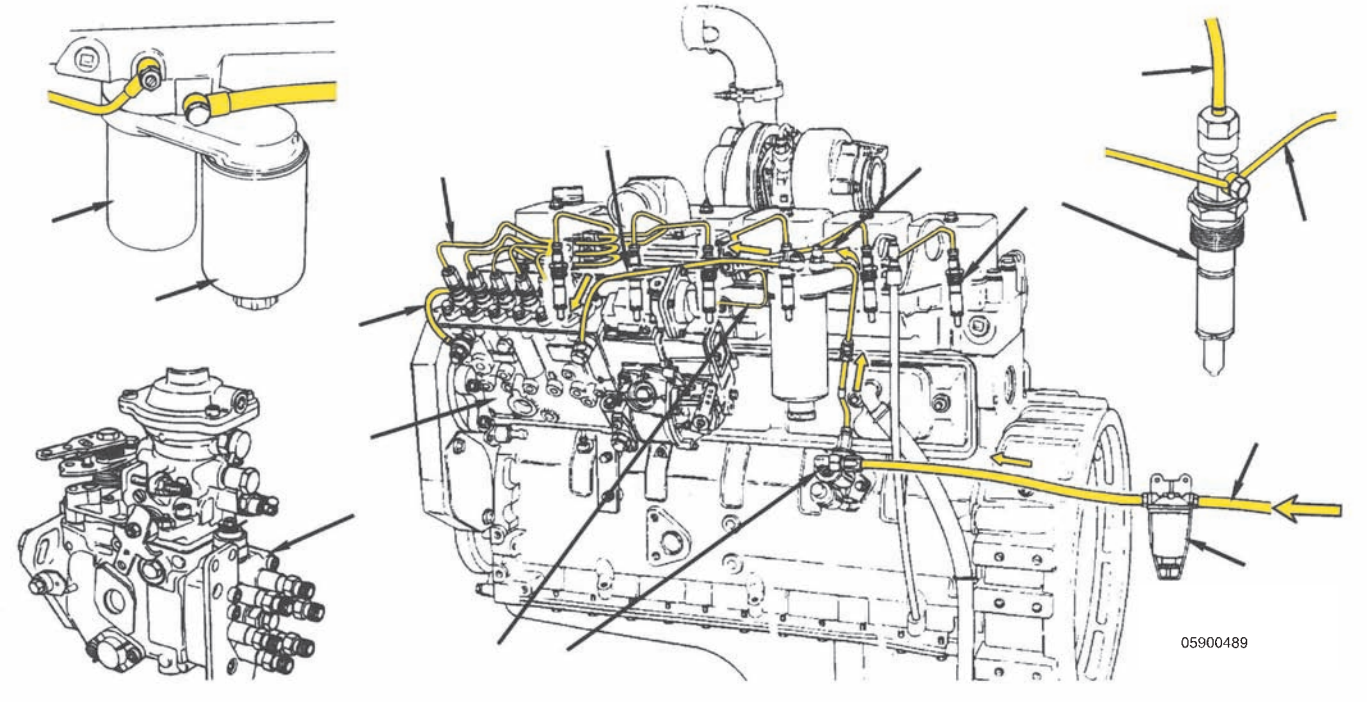

1. Fuel from supply tank
2. Prefilter or screen
3. Fuel lift pump
4. Fuel/water separator
5. Fuel filter
6. Low-pressure fuel line
7. Turbocharger boost control line
8. Bosch® P7100 injection pump
9. Bosch® rotary injection pump
10. Fuel drain manifold
11. High-pressure line
12. Bosch® 17-mm closed nozzle, hole-type injectors
13. Fuel return to supply tank.

Hydraulic Cold Start Injection Advance (Rotary Pumps Only)

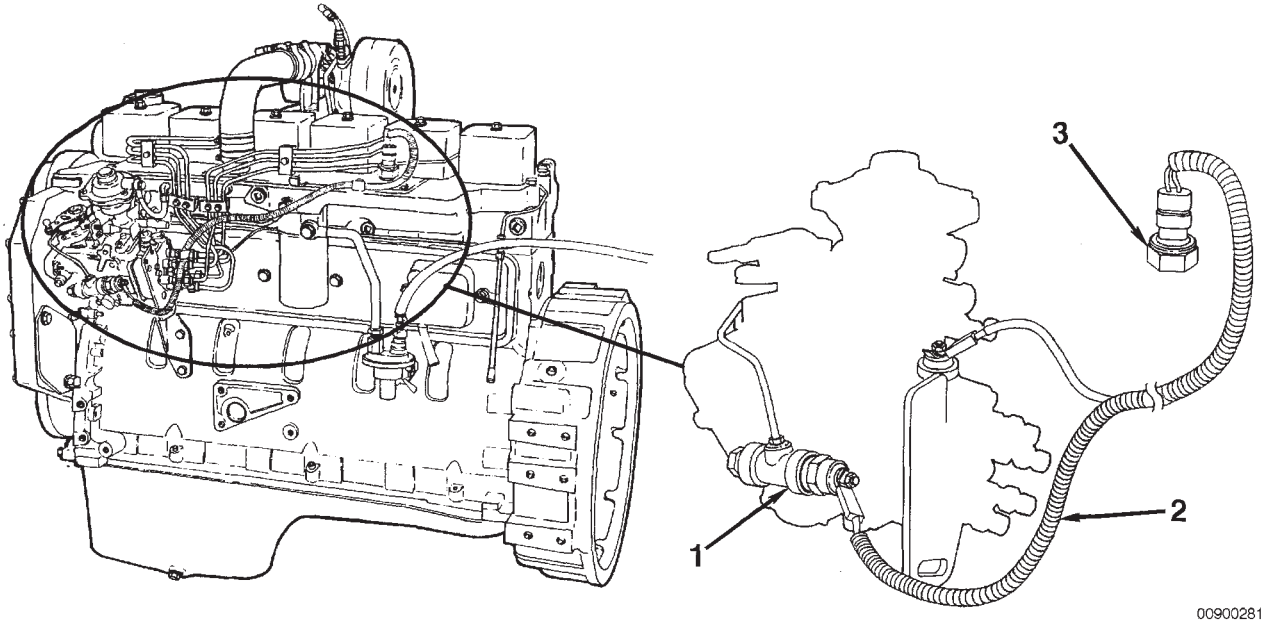

1. KSB valve
2. Wiring harness
3. Temperature switch.

Flow Diagram, Lubricating Oil System

General Information

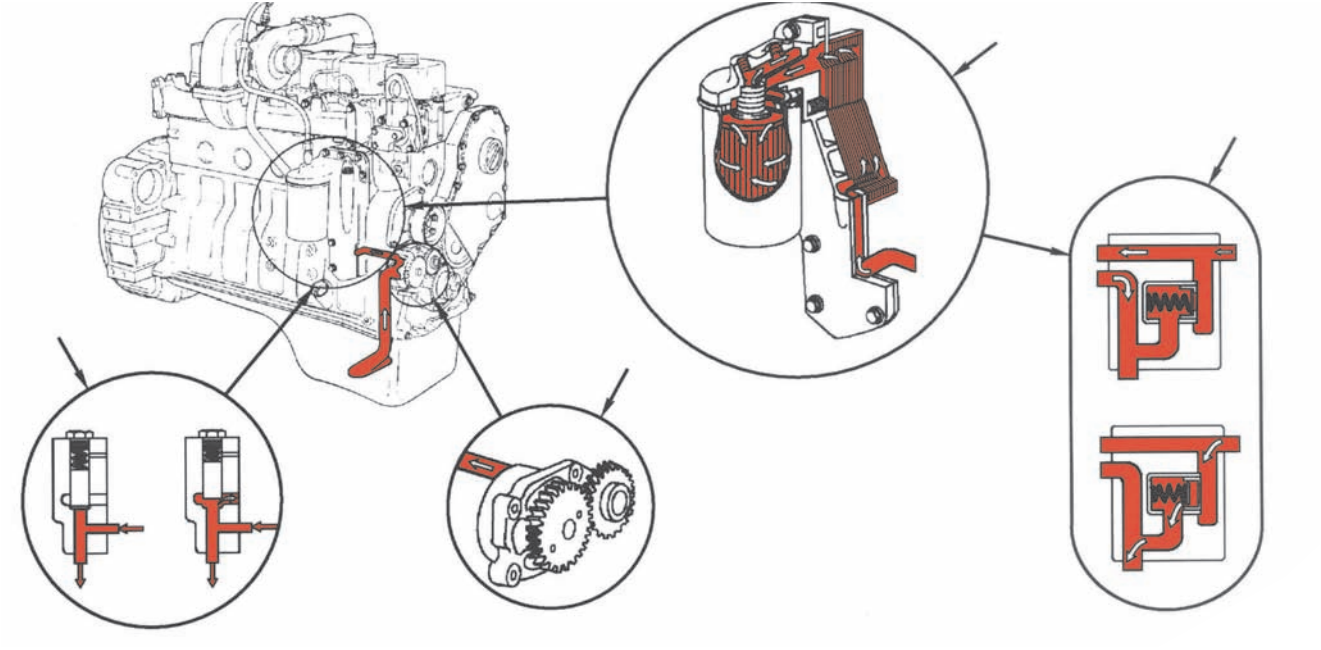

07900189

1. Gerotor lubricating oil pump
2. Pressure-regulating valve
3. Lubricating oil cooler
4. Full-flow filter
5. Filter bypass valve.

Lubrication for the Turbocharger

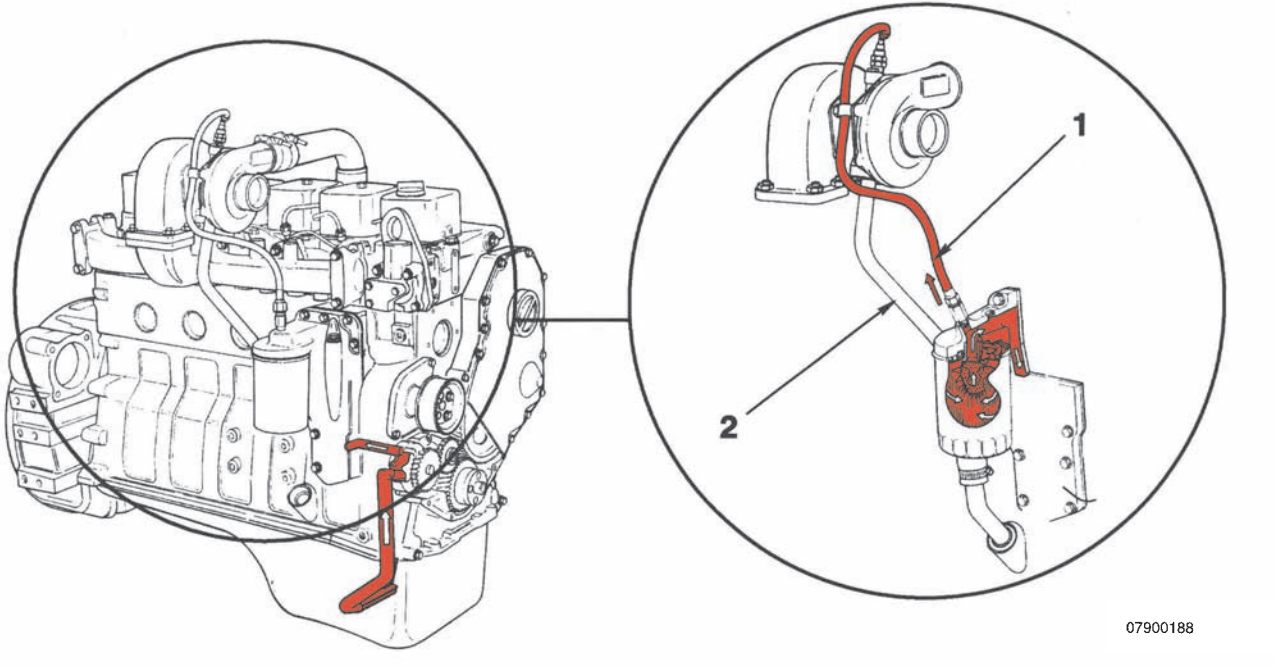

1. Oil supply
2. Oil drain.

Lubrication for the Power Components

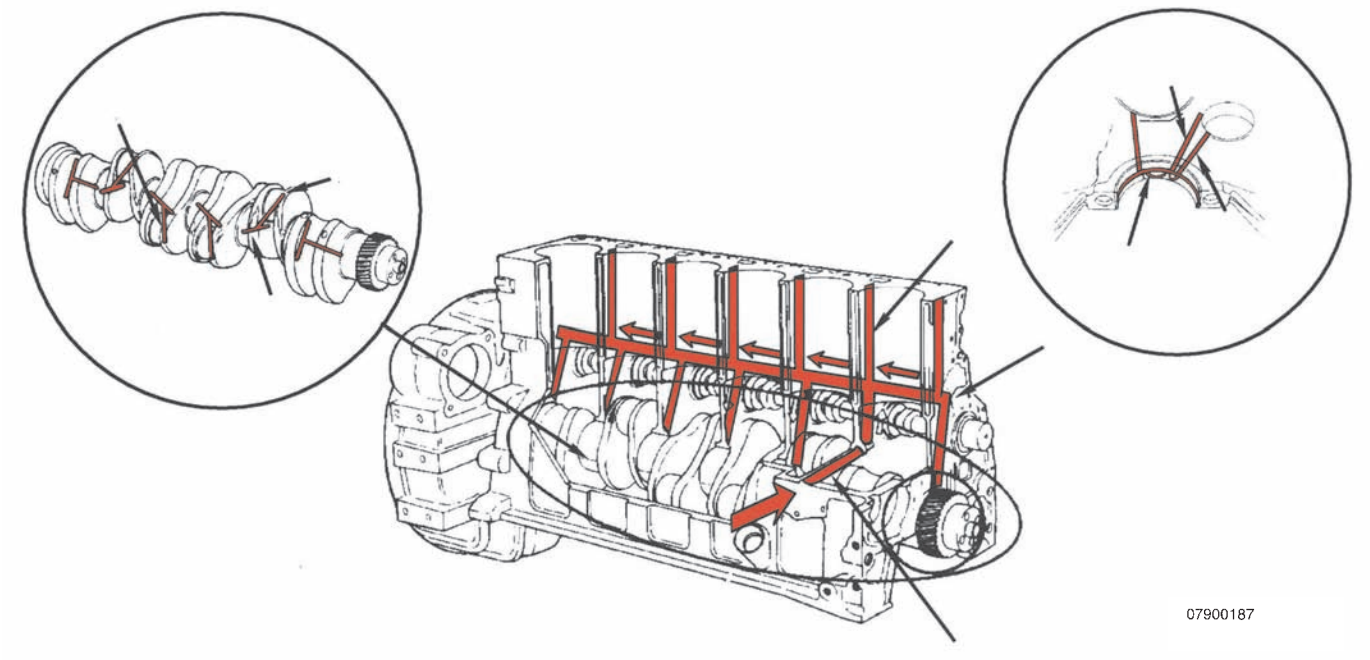

1. To valve train
2. Main oil rifle
3. From oil cooler
4. Rod journal
5. To rod bearing
6. Crankshaft, main journal
7. From main oil rifle
8. To camshaft
9. To piston cooling nozzle.

Flow Diagram, Cooling System

General Information

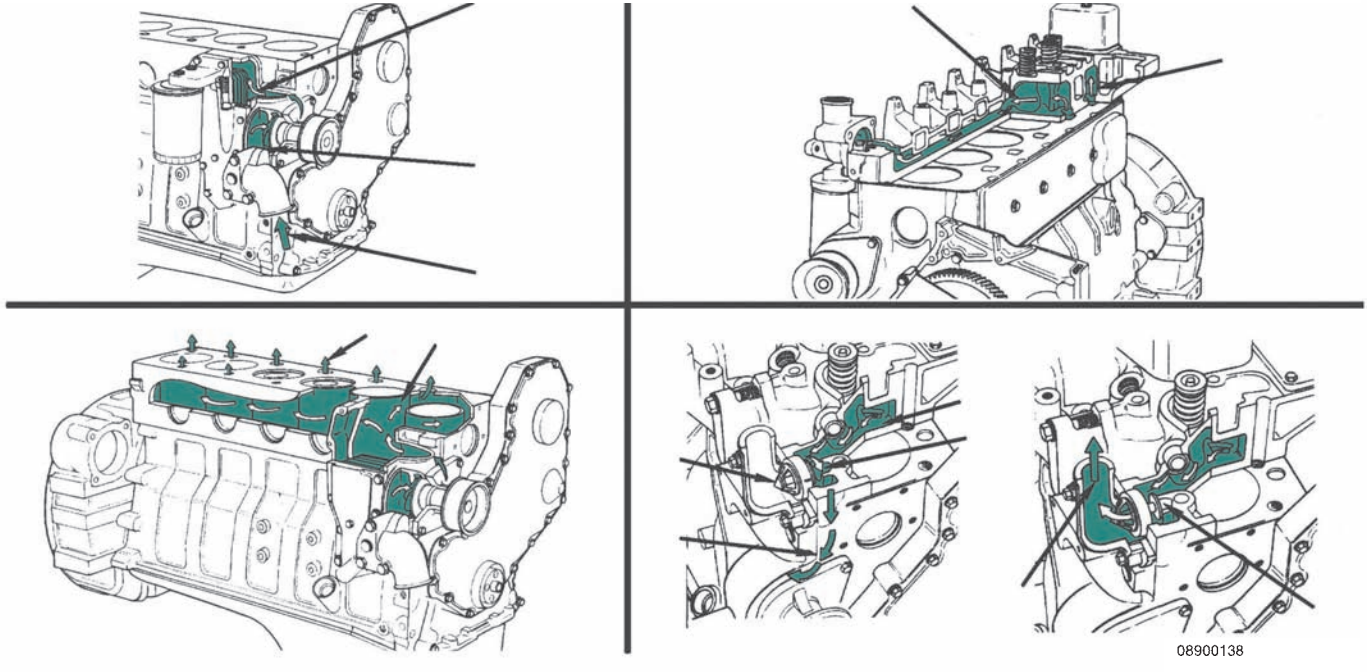

Sections A and B

1. Coolant inlet
2. Pump impeller
3. Coolant flow past oil cooler
4. Coolant flow past cylinder head
5. Coolant to cylinder head.

Sections C and D

1. Coolant flow from the cylinder head
2. Coolant to the thermostat housing
3. Coolant flow past injector
4. Thermostat
5. Coolant bypass passage
6. Coolant flow to pump inlet
7. Bypass closed
8. Coolant flow back to radiator.

Flow Diagram, Air Intake System

General Information

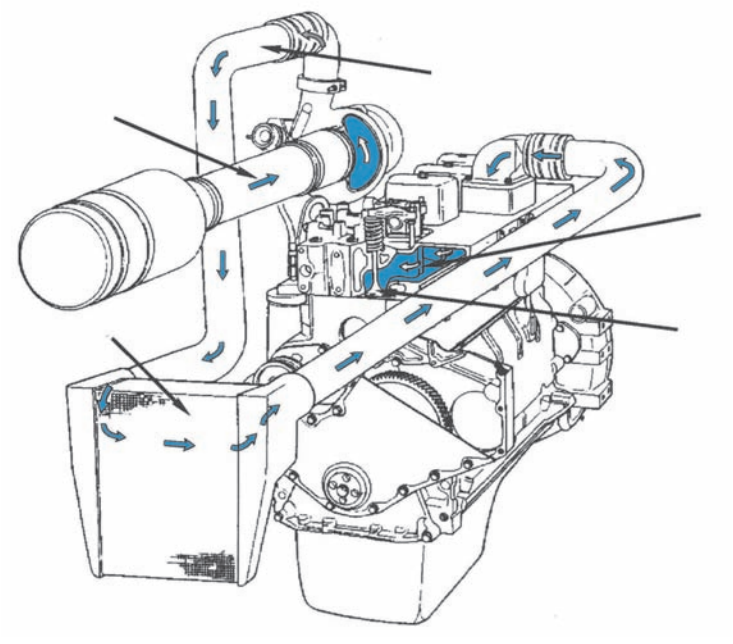

10900253

1. Intake air inlet to turbocharger
2. Turbocharger air to charge air cooler
3. Charge air cooler
4. Intake manifold
5. Intake valve.

Turbocharged-Aftercooled (Water Jacket) Engine

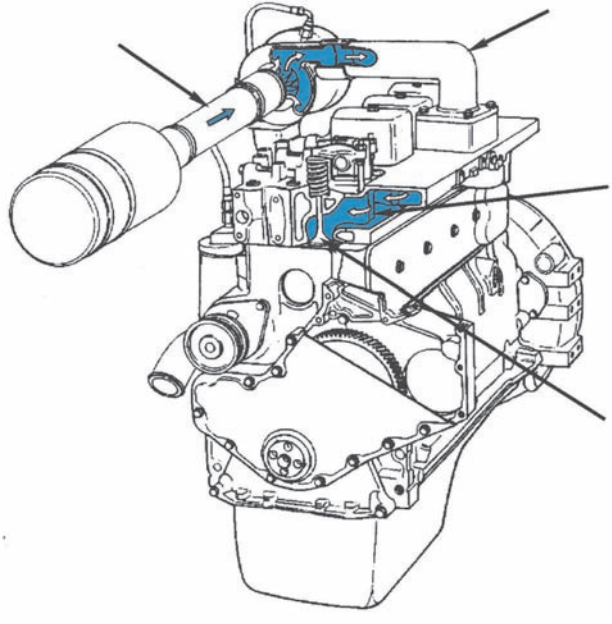

10900256

1. Intake air inlet to turbocharger
2. Air to intake manifold
3. Intake manifold
4. Intake valve.

Naturally Aspirated Engine

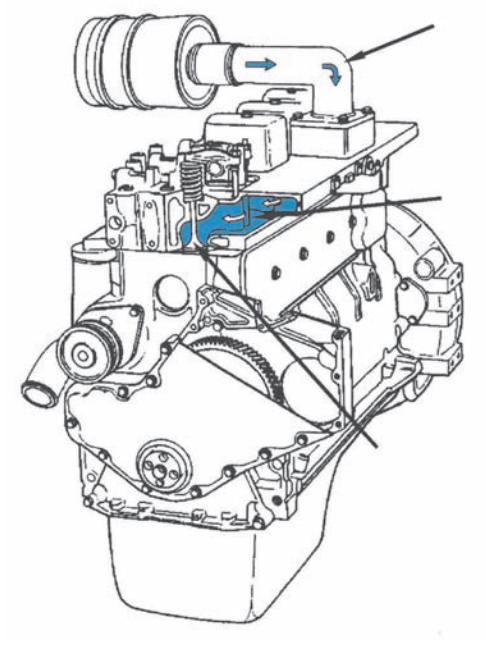

10900254

1. Intake air inlet
2. Intake manifold
3. Intake valve.

Flow Diagram, Exhaust System

General Information

Turbocharged with Wastegate

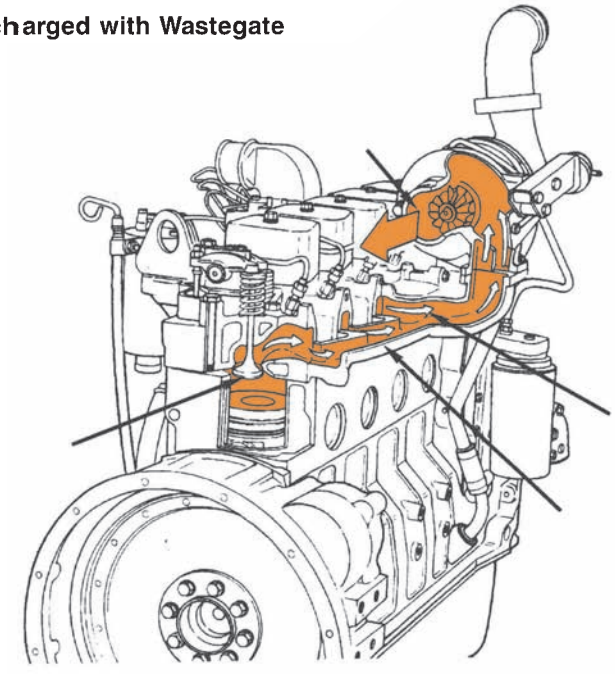

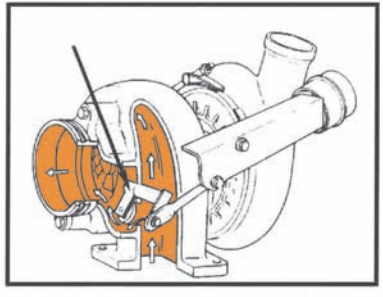

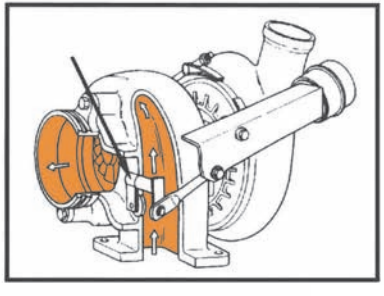

11900052

1. Wastegate closed
2. Wastegate open
3. Exhaust valve
4. Exhaust manifold
5. Turbocharger exhaust inlet
6. Turbocharger exhaust outlet.

Naturally Aspirated Engine

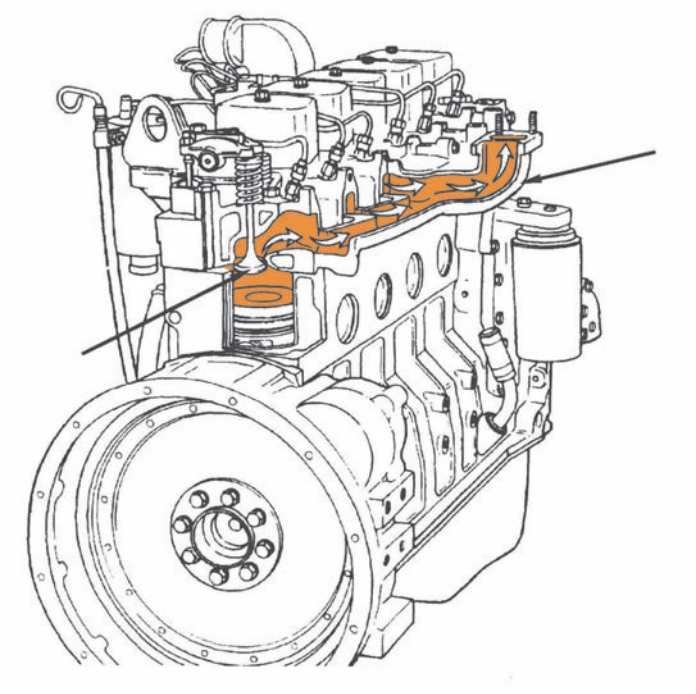

11900053

1. Exhaust valve
2. Exhaust manifold.

Turbocharged Engine

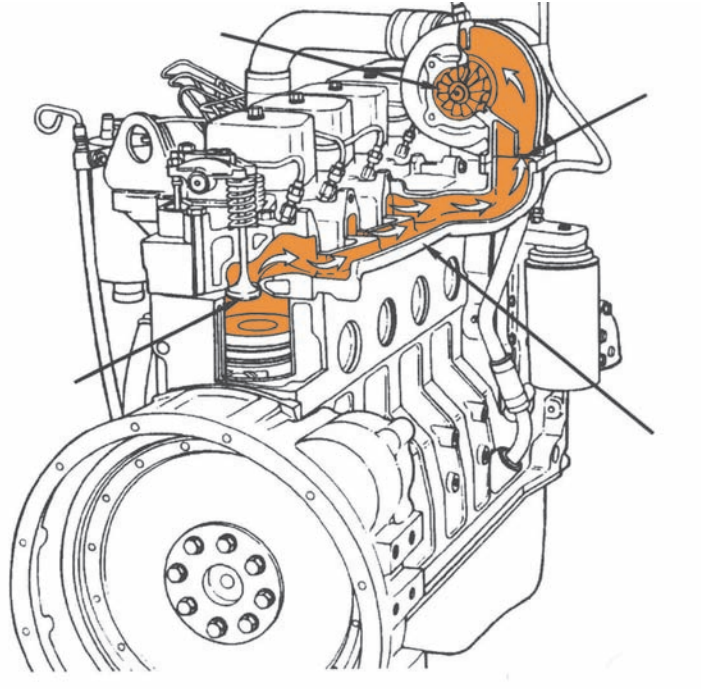

11900054

1. Exhaust valve
2. Exhaust manifold
3. Turbocharger exhaust inlet
4. Turbocharger exhaust outlet.

Flow Diagram, Compressed Air System

General Information

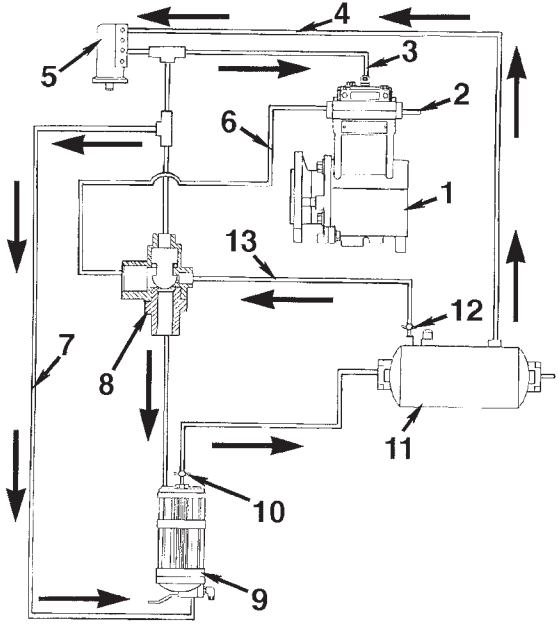

12900074

1. Compressor
2. Compressor intake
3. E-Type unloader
4. Reservoir line
5. Governor
6. Discharge line
7. Splitter valve line
8. Economy valve line
9. Air dryer
10. Check valve (built into dryer)
11. Reservoir (wet tank)
12. Check valve
13. Secondary pressure line.

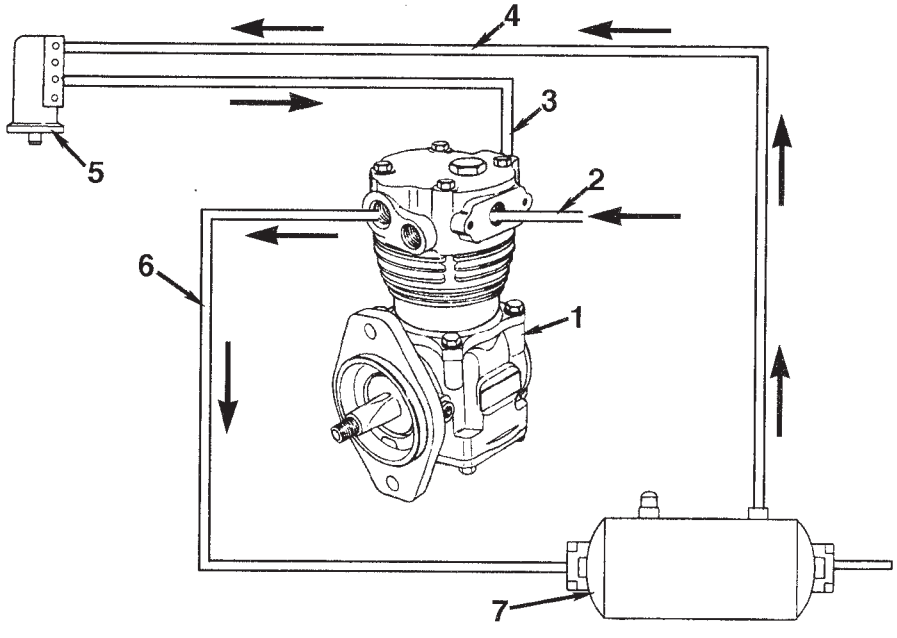

12900075

1. Compressor
2. Compressor intake
3. Unloader line
4. Reservoir line
5. Governor
6. Discharge line
7. Reservoir (wet tank).

NOTES

Section L - Service Literature

Section Contents

Page

Additional Service Literature L-1
General Information L-1

Service Literature Ordering Location L-2
General Information L-2

THIS PAGE LEFT INTENTIONALLY BLANK

Additional Service Literature

General Information

The following publications can be purchased by contacting a Cummins Distributor or by calling 1-800-DIESELS (343-7357):

Bulletin No.	Title of Publication
3666087	B Series Troubleshooting and Repair Manual
3666017	B Series Engine Shop Manual
3810234	B Series Alternate Repair Manual
3810326	4B Series Standard Repair Times
3810305	6B Series Standard Repair Times
3666025	Specifications Manual

Service Literature Ordering Location

General Information

Region	Ordering Location
United States and Canada	Cummins Distributors or Contact 1-800-DIESELS (1-800-343-7357)
U.K., Europe, Mid-East, Africa, and Eastern European Countries	Cummins Engine Co., Ltd. Royal Oak Way South Daventry Northants, NN11 5NU, England
South and Central America (excluding Brazil and Mexico)	Cummins Americas, Inc. 16085 N.W. 52nd Avenue Hialeah, FL 33104
Brazil and Mexico	Cummins Engine Co., Inc. International Parts Order Dept., MC 40931 Box 3005 Columbus, IN 47202-3005
Far East (excluding Australia and New Zealand)	Cummins Diesel Sales Corp. Literature Center 8 Tanjong Penjuru Jurong Industrial Estate Singapore

Region	Ordering Location
Australia and New Zealand	Cummins Diesel Australia Maroondah Highway, P.O.B. 139 Ringwood 3134 Victoria, Australia

Obtain current price information from your local Cummins Distributor.

NOTES

Section M - Component Manufacturers

Section Contents

	Page
Component Manufacturers' Addresses	M-1
Air Compressors	M-1
Air Cylinders	M-1
Air Heaters	M-1
Air Starting Motors	M-1
Alternators	M-2
Auxiliary Brakes	M-2
Belts	M-2
Catalytic Converters	M-3
Clutches	M-3
Coolant Heaters	M-3
Coolant Level Switches	M-3
Drive Plates	M-3
Electric Starting Motors	M-3
Electronic Switches	M-4
Engine Protection Controls	M-4
Fan Clutches	M-4
Fans	M-4
Fault Lamps	M-4
Filters	M-5
Flexplates	M-5
Fuel Coolers	M-5
Fuel Pumps	M-5
Fuel Warmers	M-5
Gauges	M-5
General Information	M-1

Page

Governors M-6
Heat Sleeves M-6
Hydraulic and Power Steering Pumps M-6
In-Line Connectors M-6
Oil Heaters M-7
Prelubrication Systems M-7
Radiators M-7
Throttle Assemblies M-7
Torque Converters M-7

Component Manufacturers' Addresses

General Information

NOTE: The following list contains addresses and telephone numbers of suppliers of accessories used on Cummins engines. Suppliers can be contacted directly for any specifications **not** covered in this manual.

Air Compressors

Bendix Heavy Vehicles Systems
Div. of Allied Automotive
901 Cleveland Street
Elyria, OH 44036
Telephone: (216) 329-9000

Holset Engineering Co., Inc.
1320 Kemper Meadow Drive
Suite 500
Cincinnati, OH 45240
Telephone: (513) 825-9600

Midland-Grau
Heavy Duty Systems
Heavy Duty Group Headquarters
10930 N. Pamona Avenue
Kansas City, MO 64153
Telephone: (816) 891-2470

Air Cylinders

Bendix Ltd.
Douglas Road
Kingswood
Bristol
England
Telephone: 0117-671881

Catching Engineering
1733 North 25th Avenue
Melrose Park, IL 60160
Telephone: (708) 344-2334

TEC - Hackett Inc.
8909 Rawles Avenue
Indianapolis, IN 46219
Telephone: (317) 895-3670

Air Heaters

Fleetguard, Inc.
1200 Fleetguard Road
Cookeville, TN 38502
Telephone: (615) 526-9551

Kim Hotstart Co.
P.O. Box 11245
Spokane, WA 99211-0245
Telephone: (509) 534-6171

Air Starting Motors

- Ingersoll Rand
  Chorley New Road
  Horwich
  Bolton
  Lancashire
  England
  BL6 6JN
  Telephone: 01204-65544

Ingersoll-Rand Engine
Starting Systems
888 Industrial Drive
Elmhurst, IL 60126
Telephone: (708) 530-3875

StartMaster
Air Starting Systems
A Division of Sycon Corporation
9595 Cheney Avenue
P. O. Box 491
Marion, OH 43302
Telephone: (614) 382-5771

Alternators

Robert Bosch Ltd.
P.O. Box 98
Broadwater Park
North Orbital Road
Denham
Uxbridge
Middlesex UD9 5HG
England
Telephone: 01895-833633

Butec Electrics
Cleveland Road
Leyland
PR5 1XB
England
Telephone: 01744-21663

C.A.V. Electrical Equipment
P.O. Box 36
Warple Way
London
W3 7SS
England
Telephone: 01-743-3111

A.C. Delco Components Group
Civic Offices
Central Milton Keynes
MK9 3EL
England
Telephone: 01908-66001

C. E. Niehoff & Co.
2021 Lee Street
Evanston, IL 60202
Telephone: (708) 866-6030

Delco-Remy America
2401 Columbus Avenue
P.O. Box 2439
Anderson, IN 46018
Telephone: (317) 646-3528

Leece-Neville Corp.
400 Main Street
Arcade, NY 14009
Telephone: (716) 492-1700

Auxiliary Brakes

The Jacobs Manufacturing Company
Vehicle Equipment Division
22 East Dudley Town Road
Bloomfield, CT 06002
Telephone: (203) 243-1441

Belts

Dayco Rubber U.K.
Sheffield Street
Stockport
Cheshire
SK4 1RV
England
Telephone: 061-432-5163

T.B.A. Belting Ltd.
P.O. Box 77
Wigan
Lancashire
WN2 4XQ
England
Telephone: 01942-59221

Dayco Mfg.
Belt Technical Center
1955 Enterprize
Rochester Hills, MI 48309
Telephone: (810) 853-8300

Gates Rubber Company
900 S. Broadway
Denver, CO 80217

Goodyear Tire and
Rubber Company
Industrial Products Div.
2601 Fortune Circle East
Indianapolis, IN 46241
Telephone: (317) 898-4170

Catalytic Converters

Donaldson Company, Inc.
1400 West 94th Street
P.O. Box 1299
Minneapolis, MN 55440
Telephone: (612) 887-3835

Nelson Division
Exhaust and Filtration Systems
1801 U.S. Highway 51 P.O. Box 428
Stoughton, WI 53589
Telephone: (608) 873-4200

Walker Manufacturing
3901 Willis Road
P.O. Box 157
Grass Lake, MI 49240
Telephone: (517) 522-5500

Coolant Level Switches

Robertshaw Controls Company
P.O. Box 400
Knoxville, TN 37901
Telephone: (216) 885–1773

Clutches

Twin Disc International S.A.
Chaussee de Namur
Nivelles
Belguim
Telephone: 067-224941

Twin Disc Incorporated
1328 Racine Street
Racine, WI 53403
Telephone: (414) 634-1981

Coolant Heaters

Fleetguard, Inc.
1200 Fleetguard Road
Cookeville, TN 38502
Telephone: (615) 526-9551

Drive Plates

Detroit Diesel Allison
Division of General Motors
Corporation
P.O. Box 894
Indianapolis, IN 46206-0894
Telephone: (317) 242-5000

Electric Starting Motors

Butec Electrics
Cleveland Road
Leyland
PR5 1XB
England
Telephone: 01744-21663

C.A.V. Electrical Equipment
P.O. Box 36
Warple Way
London
W3 7SS
England
Telephone: 01-743-3111

A.C. Delco Components Group
Civic Offices
Central Milton Keynes
MK9 3EL
England
Telephone: 0908-66001

Delco-Remy America
2401 Columbus Avenue
P.O. Box 2439
Anderson, IN 46018
Telephone: (317) 646-3528

Leece-Neville Corp.
400 Main Street
Arcade, NY 14009
Telephone: (716) 492-1700

Nippondenso Inc.
2477 Denso Drive
P.O. Box 5133
Southfield, MI 48086
Telephone: (313) 350-7500

Electronic Switches

Cutler-Hammer Products
Eaton Corporation
4201 N. 27th Street
Milwaukee, WI 53216
Telephone: (414) 449–6600

Engine Protection Controls

Flight Systems Headquarters
Hempt Road
P.O. Box 25
Mechanicsburg, PA 17055
Telephone: (717) 697–0333

The Nason Company
2810 Blue Ridge Blvd.
West Union, SC 29696
Telephone: (803) 638-9521

Teddington Industrial
Equipment
Windmill Road
Sunburn on Thames
Middlesex
TW16 7HF
England
Telephone: 09327-85500

Fan Clutches

Kysor Cooling Systems N.A.
6040 West 62nd Street
Indianapolis, IN 46278
Telephone: (317) 328–3330

Holset Engineering Co. Ltd.
P.O. Box A9
Turnbridge
Huddersfield, West Yorkshire
England HD6 7RD
Telephone: 01484-22244

Horton Industries, Inc.
P.O. Box 9455
Minneapolis, MN 55440
Telephone: (612) 378-6410

Rockford Clutch Company
1200 Windsor Road
P.O. Box 2908
Rockford, IL 61132-2908
Telephone: (815) 633-7460

Fans

Truflo Ltd.
Westwood Road
Birmingham
B6 7JF
England
Telephone: 021-557-4101

Hayes-Albion Corporation
Jackson Manufacturing Plant
1999 Wildwood Avenue
Jackson, MI 49202
Telephone: (517) 782-9421

Engineered Cooling Systems, Inc.
201 W. Carmel Drive
Carmel, IN 46032
Telephone: (317) 846-3438

Brookside Corporation
P.O. Box 30
McCordsville, IN 46055
Telephone: (317) 335-2014

TCF Aerovent Company
9100 Purdue Rd., Suite 101
Indianapolis, IN 46268-1190
Telephone: (317) 872-0030

Kysor-Cadillac
1100 Wright Street
Cadillac, MI 49601
Telephone: (616) 775-4681

Schwitzer
6040 West 62nd Street
P.O. Box 80-B
Indianapolis, IN 46206
Telephone: (317) 328-3010

Fault Lamps

Cutler-Hammer Products
Eaton Corporation
4201 N. 27th Street
Milwaukee, WI 53216
Telephone: (414) 449–6600

Filters

Fleetguard International Corp.
Cavalry Hill Industrial Park
Weedon
Northampton NN7 4TD
England
Telephone: 01327-41313

Fleetguard, Inc.
1200 Fleetguard Road
Cookeville, TN 38502
Telephone: 1–800–22–Filters
(1–800–223–4583)

Flexplates

Corrugated Packing and
Sheet Metal
Hamsterley
Newcastle Upon Tyne
England
Telephone: 01207-560-505

Allison Transmission
Division of General Motors
Corporation
P.O. Box 894
Indianapolis, IN 46206-0894
Telephone: (317) 242-5000

Midwest Mfg. Co.
29500 Southfield Road, Suite 122
Southfield, MI 48076
Telephone: (313) 642-5355

Wohlert Corporation
708 East Grand River Avenue
P.O. Box 20217
Lansing, MI 48901
Telephone: (517) 485-3750

Fuel Coolers

Hayden, Inc.
1531 Pomona Road
P.O. Box 848
Corona, CA 91718–0848
Telephone: (909) 736–2665

Fuel Pumps

Robert Bosch Corp.
Automotive Group
2800 South 25th Ave.
Broadview, IL 60153

Fuel Warmers

Fleetguard, Inc.
1200 Fleetguard Road
Cookeville, TN 38502
Telephone: (615) 526-9551

Gauges

A.I.S.
Dyffon Industrial Estate
Ystrad Mynach
Hengoed
Mid Glamorgan
CF8 7XD
England
Telephone: 01443-812791

Grasslin U.K. Ltd.
Vale Rise
Tonbridge
Kent
TN9 1TB
England
Telephone: 01732-359888

Icknield Instruments Ltd.
Jubilee Road
Letchworth
Herts
England
Telephone: 04626-5551

Superb Tool and Gauge Co.
21 Princip Street
Birmingham
B4 61E
England
Telephone: 021-359-4876

Kabi Electrical and Plastics
Cranborne Road
Potters Bar
Herts
EN6 3JP
England
Telephone: 01707-53444

Datcon Instruments
P.O. Box 128
East Petersburg, PA 17520
Telephone: (717) 569-5713

Rochester Gauges, Inc.
11616 Harry Hines Blvd.
P.O. Box 29242
Dallas, TX 75229
Telephone: (214) 241-2161

Governors

Woodward Governors Ltd.
P.O. Box 15
663/664 Ajax Avenue
Slough
Bucks
SL1 4DD
England
Telephone: 01753-26835

Woodward Governor Co.
P.O. Box 1519
Fort Collins, CO 80522
Telephone: (303) 482-5811
(800) 523-2831

Barber Colman Co.
1354 Clifford Avenue
Loves Park, IL 61132
Telephone: (815) 637-3000

United Technologies
Diesel Systems
1000 Jorie Blvd.
Suite 111
Oak Brook, IL 69521
Telephone: (312) 325-2020

Heat Sleeves

Bentley Harris Manufacturing Co.
100 Bentley Harris Way
Gordonville, TN 38563
Telephone: (313) 348-5779

Hydraulic and Power Steering Pumps

Hobourn Automotive
Temple Farm Works
Priory Road
Strood
Rochester
Kent, England
ME2 2BD
Telephone: 01634-71773

Honeywell Control Systems Ltd.
Honeywell House
Charles Square
Bracknell
Berks RG12 1EB
Telephone: 01344-4245

Sundstrand Hydratec Ltd.
Cheney Manor Trading Estate
Swindon
Wiltshire
SN2 2PZ
England
Telephone: 01793-30101

Sperry Vickers
P.O. Box 302
Troy, MI 48084
Telephone: (313) 280-3000

Z.F.
P.O. Box 1340
Grafvonsoden Strasse
5-9 D7070
Schwaebisch Gmuend
Germany
Telephone: 7070-7171-31510

In-Line Connectors

Pioneer-Standard Electronics, Inc.
5440 Neiman Parkway
Solon, OH 44139
Telephone: (216) 349–1300

Deutsch
Industrial Products Division
37140 Industrial Avenue
Hemet, CA 92343
Telephone: (714) 929–1200

Oil Heaters

Fleetguard, Inc.
1200 Fleetguard Road
Cookeville, TN 38502
Telephone: (615) 526-9551

Kim Hotstart Co.
P.O. Box 11245
Spokane, WA 99211-0245
Telephone: (509) 534-6171

Prelubrication Systems

RPM Industries, Inc.
Suite 109
55 Hickory Street
Washington, PA 15301
Telephone: (412) 228–5130

Radiators

JB Radiator Specialties, Inc.
P.O. Box 292087
Sacramento, CA 95829–2087
Telephone: (916) 381–4791

The G&O Manufacturing Company
100 Gando Drive
P.O. Box 1204
New Haven, CT 06505–1204
Telephone: (203) 562–5121

Young Radiator Company
2825 Four Mile Road
Racine, WI 53404
Telephone: (910) 271–2397

L and M Radiator, Inc.
1414 East 37th Street
Hibbing, MN 55746
Telephone: (218) 263–8993

Throttle Assemblies

Williams Controls, Inc.
14100 SW 72nd Avenue
Portland, OR 97224
Telephone: (503) 684–8600

Torque Converters

Twin Disc International S.A.
Chaussee de Namur
Nivelles
Belgium
Telephone: 067-224941

Twin Disc Incorporated
1328 Racine Street
Racine, WI 53403-1758
Telephone: (414) 634-1981

Rockford Powertrain, Inc.
Off-Highway Systems
1200 Windsor Road
P.O. Box 2908
Rockford, IL 61132-2908
Telephone: (815) 633-7460

Modine Mfg. Co.
1500 DeKoven Avenue
Racine, WI 53401
Telephone: (414) 636-1640

NOTES

Section S - Service Assistance

Section Contents

Page

Service Assistance S-1
Distributors and Branches - Australia S-22
Distributors and Branches - Canada S-19
Distributors and Branches - New Zealand S-25
Distributors and Branches - United States S-4
Division and Regional Offices S-3
Emergency and Technical Service S-1
Problem Solving S-2
Routine Service and Parts S-1

THIS PAGE LEFT INTENTIONALLY BLANK

Service Assistance

Routine Service and Parts

Personnel at Cummins Authorized Repair Locations can assist you with the correct operation and service of your engine. Cummins has a worldwide service network of more than 5,000 Distributors and Dealers who have been trained to provide sound advice, expert service, and complete parts support. Check the telephone directory yellow pages or refer to the directory in this section for the nearest Cummins Authorized Repair Location.

Emergency and Technical Service

The Cummins Customer Assistance Center provides a 24-hour, toll free telephone number to aid in technical and emergency service when a Cummins Authorized Repair Location can **not** be reached or is unable to resolve an issue with a Cummins product.

If additional assistance is required, call Toll-Free:

1-800-DIESELS
(1-800-343-7357)

- Includes all 50 states, Bermuda, Puerto Rico, Virgin Islands, and the Bahamas.
- Outside of North America contact your Regional Office. Telephone numbers and addresses are listed in the International Directory.

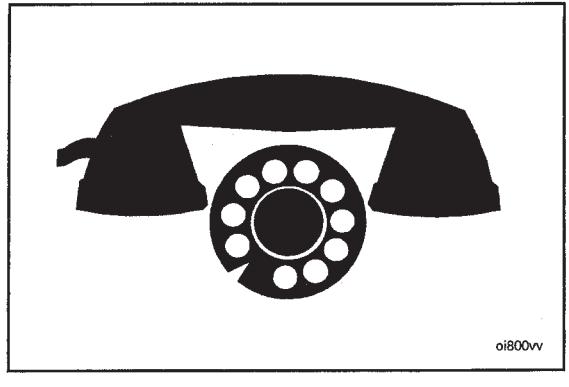

Problem Solving

Normally, any problem that arises with the sale, service, or repair of your engine can be handled by a Cummins Authorized Repair Location in your area. Refer to the telephone directory yellow pages for the one nearest you. If the problem has **not** been handled satisfactorily, follow the steps outlined below:

1. If the disagreement is with a Dealer, talk to the Cummins Distributor with whom he has his service agreement.
2. If the disagreement is with a Distributor, call the nearest Cummins Division or Regional Office; however, most problems are solved below the Division or Regional office level. Telephone numbers and addresses are listed in this section. Before calling, write down the following information:
   a. Engine model and serial number
   b. Type and make of equipment
   c. Total kilometers [miles] or hours of operation
   d. Warranty start date
   e. Nature of problem
   f. Summary of the current problem arranged in the order of occurrence
   g. Name and location of the Cummins Distributor or Dealer
3. If a problem can **not** be resolved satisfactorily through your Cummins Authorized Repair Location or Division Office, write to:

Cummins Customer Assistance Center - 41403, Cummins Engine Company, Inc., Box 3005, Columbus, IN 47202-3005

Division and Regional Offices

NOTE: The following list contains offices in U.S., Canada, Australia, New Zealand, and Puerto Rico.

United States

Southern Division Office
Cummins Engine Company, Inc.
425 Franklin Road S.W.
Suite 500
Marietta, GA 30067
Telephone: (770) 423-1108
FAX: (770) 499-8240

Plains Regional Office
Cummins Engine Company, Inc.
1901 Central Drive
Suite 356
Bedford, TX 76021
Telephone: (817) 267-3172
FAX: N/A

Canada

Canadian Division Office
Cummins Diesel of Canada, Ltd.
5575 North Service Road
Burlington, Ontario L726M1
Telephone: (905) 331-5944
FAX: (905) 331-0276

Western Canada Regional Office
Cummins Diesel of Canada, Ltd.
18452 - 96th Avenue
Surrey, B.C. V3T 4W2
Telephone: (604) 882-5727
FAX: (604) 882-9110

Eastern Canada Regional Office
Cummins Diesel of Canada Ltd.
7200 Trans Canada Hwy.
Pt. Cuaire, Quebec H9R 1C0
Telephone: (514) 695-2402
FAX: (514) 695-8917

Central Canada Regional Office
Cummins Diesel of Canada Ltd.
4887 – 35th Street SE
Calgary, Alberta T2B 3C6
FAX: (403) 569-9974

Australia Regional Office

Cummins Engine Company Pty. Ltd.
2 Caribbean Drive
Scoresby, Victoria 3179
Australia
Telephone: (61-3) 9765-3222
FAX: (61-3) 9763-0079

NOTE: This office also serves New Zealand.

Cummins Americas Regional Office

Cummins Latin America
3088 N. Commence Parkway
MPC #14, Building A
Miramar, FL 33025
Telephone: (305) 621-1300

NOTE: This office serves Puerto Rico and South America excluding Brazil.

Distributors and Branches - United States

Alabama

Birmingham Distributor
Cummins Alabama, Inc.
2200 Pinson Highway
P.O. Box 1147
Birmingham, AL 35201
Telephone: (205) 841-0421
FAX: (205) 849–5926

Mobile Branch
Cummins Alabama, Inc.
1924 N. Beltline Hwy.
Mobile, AL 36601–1598
Telephone: (334) 456-2236
FAX: (334) 452–6419

Mobile Onan/Marine Branch
Cummins Alabama, Inc.
3422 Georgia Pacific Avenue
Mobile, AL 36617
Telephone: (334) 452-6426
FAX: (334) 473-6657

Montgomery Branch
Cummins Alabama, Inc.
2325 West Fairview Avenue
Montgomery, AL 36108
Telephone: (205) 263-2594
FAX: (205) 263–2594

Alaska

Anchorage - (Branch of Seattle)
Cummins Northwest, Inc.
2618 Commercial Drive
Anchorage, AK 99501-3095
Telephone: (907) 279-7594
FAX: (907) 276-6340

Arizona

Phoenix Distributor and Branch
Cummins Southwest, Inc.
2239 N. Black Canyon Hgwy
Phoenix, AZ 85009
Telephone: (602) 252-8021
FAX: (602) 253–6725

Tucson Branch
Cummins Southwest, Inc.
1912 West Prince Road
Tucson, AZ 85705
Telephone: (520) 887-7440
FAX: (520) 887–4173

Arkansas

Little Rock - (Branch of Memphis)
Cummins Mid-South, Inc.
6600 Interstate 30
Little Rock, AR 72209
Telephone:
Sales: (501) 569-5600
Service: (501) 569–5656
Parts: (501) 569–5613
FAX: (501) 565–2199

California

San Leandro Distributor
Cummins West, Inc.
14775 Wicks Blvd.
San Leandro, CA 94577–6779
Telephone: (510) 351-6101
FAX: (510) 352–3925

Arcata Branch
Cummins West, Inc.
4801 West End Road
Arcata, CA 95521
Telephone: (707) 822–7392
FAX: (707) 822–7585

Bakersfield Branch
Cummins West, Inc.
4601 East Brundage Lane
Bakersfield, CA 93307
Telephone: (805) 325-9404
FAX: (805) 861–8719

Fresno Branch
Cummins West, Inc.
2740 Church Avenue
Fresno, CA 93706
Telephone: (209) 495–4745
FAX: (209) 486–7402

Redding Branch
Cummins West, Inc.
20247 Charlanne Drive
Redding, CA 96001
Telephone: (916) 222–4070
FAX: (916) 224–4075

Stockton Branch
Cummins West, Inc.
41 West Yokuts Avenue
Suite 131
Stockton, CA 95207
Telephone: (209) 473–0386
FAX: (209) 478–2454

West Sacramento Branch
Cummins West, Inc.
2661 Evergreen Avenue
West Sacramento, CA 95691
Telephone: (916) 371-0630
FAX: (916) 371–2849

Los Angeles Distributor
Cummins Cal Pacific Inc.
1939 Deere Avenue (Irvine)
Irvine, CA 92606
Telephone: (949) 253–6000
FAX: (949) 253–6080

Montebello Branch
Cummins Cal Pacific Inc.
1105 South Greenwood Avenue
Montebello, CA 90640
Telephone: (323) 728–8111
FAX: (323) 889–7422

Bloomington Branch
Cummins Cal Pacific Inc.
3061 S. Riverside Avenue
Bloomington, CA 92377
Telephone: (909) 877-0433
FAX: (909) 877-3787

San Diego Branch
Cummins Cal Pacific Inc.
310 N. Johnson Avenue
El Cajon, CA 92020
Telephone: (619) 593-3093
FAX: (619) 593–0600

Ventura Branch
Cummins Cal-Pacific Inc.
3958 Transport St.
Ventura, CA 93003
Telephone: (805) 644–7281
FAX: (805) 644–7284

Colorado

Denver Distributor
Cummins Rocky Mountain, Inc.
5100 East 58th Avenue
Commerce City, CO 80022
Telephone: (303) 287-0201
FAX: (303) 288–7080

Denver Onan/Industrial Branch
Cummins Rocky Mountain, Inc.
5100 East 58th Ave.
Commerce City, CO 80022
Telephone: (303) 286-7697
FAX: (303) 287–4837

Durango Branch
Cummins Rocky Mountain, Inc.
13595 County Road 213
Durango, CO 81301
Telephone: (970) 259–7470
FAX: (970) 259–7482

Grand Junction Branch
Cummins Rocky Mountain, Inc.
2380 U.S. Highway 6 & 50
P.O. Box 339
Grand Junction, CO 81501
Telephone: (303) 242-5776
FAX: (303) 243–5495

Connecticut

Rocky Hill - (Branch of Bronx)
Cummins Metropower, Inc.
914 Cromwell Ave.
Rocky Hill, CT 06067
Telephone: (860) 529–7474
FAX: (860) 529–7524

Florida

Tampa Distributor
Cummins Southeastern Power, Inc.
Corporate Office
5421 N. 59th Street
Tampa, FL 33610
Telephone: (813) 621-7202
FAX: (813) 621–8250

Ft. Myers Branch
Cummins Southeastern Power, Inc.
2671 Edison Avenue
Ft. Myers, FL 33902
Telephone: (941) 337–1211
FAX: (941) 337-5374

Jacksonville Branch
Cummins Southeastern Power, Inc.
755 Pickettville Rd.
Jacksonville, FL 32220
Telephone: (904) 378-1902
FAX: (904) 378–1904

Hialeah (Miami) Branch
Cummins Southeastern Power, Inc.
9900 N.W. 77th Avenue
Hialeah Gardens, FL 33016
Telephone: (305) 821-4200
FAX: (305) 557-2992

Ocala Branch
Cummins Southeastern Power
321 Southwest 52nd Ave.
Ocala, FL 34474–1892
Telephone: (352) 861–1122
FAX: (352) 861–1130

Orlando Branch
Cummins Southeastern Power, Inc.
4020 North
Orange Blossom Trail
Orlando, FL 32810
Telephone: (407) 298-2080
FAX: (407) 290-8727

Tampa Branch
Cummins Southeastern Power, Inc.
5912 E. Hillsborough Avenue
Tampa, FL 33610
Telephone: (813) 626-1101
FAX: (813) 628–4183

Georgia

Atlanta Distributor
Cummins South, Inc.
5125 Georgia Highway 85
College Park, GA 30349
Telephone: (404) 763-0151
FAX: (404) 766–2132

Albany Branch
Cummins South, Inc.
1915 W. Oakridge Drive
Albany, GA 31707–4938
Telephone: (912) 888-6210
FAX: (912) 883–1670

Atlanta Branch
Cummins South, Inc.
100 University Avenue, S.W.
Atlanta, GA 30315-2202
Telephone: (404) 527-7800
FAX: (404) 527–7832

Augusta Branch
Cummins South, Inc.
1255 New Savannah Road
Augusta, GA 30901-3891
Telephone: (706) 722-8825
FAX: (706) 722–7553

Savannah Branch
Cummins South, Inc.
8 Interchange Court
Savannah, GA 31401–1627
Telephone: (912) 232-5565
FAX: (912) 232–5145

Hawaii

Kapolei Distributor
Cummins Hawaii Diesel Power, Inc.
91–230 Kalaeloa Blvd.
Kapolei, HI 96707
Telephone: (808) 682–8110
FAX: (808) 682–8477

Idaho

Boise - (Branch of Salt Lake City)
Cummins Intermountain, Inc.
2851 Federal Way City
Boise, ID 83705
Telephone: (208) 336-5000
FAX: (208) 338-5436

Pocatello - (Branch of Salt Lake City)
Cummins Intermountain, Inc.
14299 Highway 30 West
Pocatello, ID 83201
Telephone: (208) 234-1661
FAX: (208) 234–1662

Illinois

Chicago Distributor
Cummins Northern Illinois, Inc.
7145 Santa Fe Drive
Hodgkins, IL 60525
Telephone: (708) 579-9222
FAX: (708) 352-7547

Bloomington-Normal – (Branch of Indianapolis)
Cummins Mid-States Power, Inc.
(at U.S. 51 N and I-55)
414 W. Northtown Road
Bloomington-Normal, IL 61761
Telephone: (309) 452-4454
FAX: (309) 452–1642

Onan Branch
Cummins/Onan Northern Illinois
8745 W. 82nd Place
Justin, IL 60458
Telephone: (708) 563–7070
FAX: (708) 563–7095

Harrisburg (Branch of St. Louis)
Cummins Gateway, Inc.
Highway 45 North
Harrisburg, IL 62946
Telephone: (618) 273-4138
FAX: (618) 273–4531

Rock Island - (Branch of Omaha)
Cummins Great Plains Diesel, Inc.
7820 - 42nd Street West
Rock Island, IL 61204
Telephone: (309) 787-4300
FAX: (309) 787–4397

Onan Branch
Cummins Gateway, Inc.
#1 Extra Mile Drive
Collinsville, IL 62234
Telephone: (618) 345–0123
FAX: (314) 531–6604

Indiana

Indianapolis Distributor
Cummins Mid-States Power, Inc.
P.O. Box 42917
3762 West Morris Street
Indianapolis, IN 46242-0917
Telephone: (317) 243-7979
FAX: (317) 240–1925

Evansville - (Branch of Louisville)
Cummins Cumberland, Inc.
7901 Highway 41 North
Evansville, IN 47711
Telephone: (812) 867-4400
FAX: (812) 421–3282

Ft. Wayne Branch
Cummins Mid-States Power, Inc.
3415 Coliseum Blvd. West
(At Jct. I-69 & 30/33)
Ft. Wayne, IN 46808
Telephone: (219) 482-3691
FAX: (219) 484–8930

Gary - (Branch of Chicago)
Cummins Northern Illinois, Inc.
1440 Texas Street
Gary, IN 46402
Telephone: (219) 885-5591
FAX: (219) 883-4817

Indianapolis Branch
Cummins Mid-States Power, Inc.
P. O. Box 42917
3621 West Morris Street
Indianapolis, IN 46242-0917
Telephone: (317) 244-7251
FAX: (317) 240–1215

Onan Branch
Mid-States Power, Inc.
4301 W. Morris Street
P.O. Box 42917
Indianapolis, IN 46240–0917
Telephone: (317) 240–1967
FAX: (317) 240–1975

Iowa

Cedar Rapids - (Branch of Omaha)
Cummins Great Plains Diesel, Inc.
625 - 33rd Avenue SW
Cedar Rapids, IA 52406
Telephone: (319) 366-7537 (24 hours)
FAX: (319) 366–7562

Des Moines - (Branch of Omaha)
Cummins Great Plains Diesel, Inc.
1680 N.E. 51st Avenue
P.O. Box B
Des Moines, IA 50313
Telephone: (515) 262-9591
Parts: (515) 262-9744
FAX: (515) 262–0626

Des Moines - (Branch of Omaha)
Midwestern Power Products
Division of Cummins Great Plains Diesel, Inc.
5194 N.E. 17th Street
Des Moines, IA 50313
Telephone: (515) 264-1650
FAX: (515) 264-1651

Kansas

Colby - (Branch of Kansas City, Missouri)
Cummins Mid-America, LLC.
1880 South Range
Colby, KS 67701
Telephone: (785) 462-3945
FAX: (785) 462-3970

Garden City - (Branch of Kansas City, Missouri)
Cummins Mid-America, Inc.
1285 Acraway
Garden City, KS 67846
Telephone: (316) 275-2277
FAX: (316) 275–2533

Wichita - (Branch of Kansas City, Missouri)
Cummins Mid-America, Inc.
5101 North Broadway
Wichita, KS 67201
Telephone: (316) 838-0875
FAX: (316) 838–0704

Kentucky

Louisville Distributor
Cummins Cumberland, Inc.
(Corporate Office)
2301 Nelsonville Parkway
Louisville, KY 40223
Telephone: (502) 254-3363
FAX: (502) 254–9272

Hazard Branch
Cummins Cumberland, Inc.
Highway 15 South
P.O. Box 510
Hazard, KY 41701
Telephone: (606) 436-5718
FAX: (606) 436–5038

Louisville Branch
Cummins Cumberland, Inc.
9820 Bluegrass Parkway
Louisville, KY 40299
Telephone: (502) 491-4263
FAX: (502) 499–0896

Louisiana

Morgan City - (Branch of Memphis)
Cummins Mid-South, Inc.
Hwy. 90 East
P.O. Box 1229
Amelia, LA 70340
Telephone: (504) 631-0576
FAX: (504) 631–0081

New Orleans - (Branch of Memphis)
Cummins Mid-South, Inc.
110 E. Airline Highway
Kenner, LA 70062
Telephone: (504) 468-3535
FAX: (504) 465–3408

Maine

Bangor (Branch of Boston)
Cummins Northeast, Inc.
221 Hammond Street
Bangor, ME 04401
Telephone: (207) 941-1061
FAX: (207) 945–3170

Scarborough - (Branch of Boston)
Cummins Northeast, Inc.
10 Gibson Road
Scarborough, ME 04074
Telephone: (207) 883-8155
FAX: (207) 883–5526

Maryland

Baltimore Distributor
Cummins Power Systems, Inc.
1907 Parkwood Drive
MD 21061
Telephone: (410) 590–8700
FAX: (410) 590–8723

Massachusetts

Boston Distributor
Cummins Northeast, Inc.
100 Allied Drive
Dedham, MA 02026
Telephone: (781) 329-1750
FAX: (781) 329–4428

Springfield Branch
Cummins Northeast, Inc.
177 Rocus Street
Springfield, MA 01104
Telephone: (413) 737-2659
FAX: (413) 731–1082

Mexico

Tijuana - (Branch of Los Angeles)
Distribuidora Cummins De Baja
Blvd. 3ra. Oeste No. 17523
Fracc. Industrial
Garita de Otay C.P. 22400
Tijuana, Baja California
Mexico
Telephone: 011–52–66–238433
FAX: 011–52–66–238649

Michigan

Detroit (Novi) Distributor
Cummins Michigan, Inc.
41216 Vincenti Court
Novi, MI 48375
Telephone: (248) 478-9700
FAX: (248) 478-1570

Blissfield, Michigan
Diesel Fuel Systems, Inc.
Subsidiary of Cummins Michigan Inc.
211 N. Jipson Street
Blissfield, MI 49228
Telephone: (517) 486-4324
FAX: (517) 486-3614

Dearborn Branch
Cummins Michigan, Inc.
3760 Wyoming Avenue
Dearborn, MI 48120
Telephone: (313) 843-6200
FAX: (313) 843-6070

Grand Rapids Branch
Cummins Michigan, Inc.
3715 Clay Avenue, S.W.
Grand Rapids, MI 49508
Telephone: (616) 538-2250
FAX: (616) 538-3830

Grand Rapids Branch
Standby Power, Inc.
7580 Expressway Drive S.W.
Grand Rapids, MI 49548
Telephone: (616) 281-2211
FAX: (616) 281-3177

Iron Mountain - (Branch of De Pere)
Cummins Great Lakes, Inc.
1901 Stevenson Avenue
Iron Mountain, MI 49801
Telephone: (906) 774-2424
(800) 236-2424
FAX: (906) 774-1190

Novi Branch
Cummins Michigan, Inc.
25100 Novi Road
Novi, MI 48375
Telephone: (248) 380-4300
FAX: (248) 380-0910

Power Products (Branch of Detroit)
Cummins Michigan, Inc.
41326 Vincenti Ct.
Novi, MI 48375
Telephone: (248) 426-9300
FAX: (248) 473-8560

Saginaw Branch
Cummins Michigan, Inc.
722 N. Outer Drive
Saginaw, MI 48605
Telephone: (517) 752-5200
FAX: (517) 752-4194

Standby Power - (Branch of Detroit)
Cummins Michigan, Inc.
12130 Dixie
Redford, MI 48239
Telephone: (313) 538-0200
FAX: (313) 538-3966

Minnesota

St. Paul Distributor
Cummins North Central, Inc.
3030 Centre Pointe Drive
Suite 500
Roseville, MN 55113
Telephone: (651) 636-1000
FAX: (651) 638-2442

Duluth Branch
Cummins Diesel Sales, Inc.
3115 Truck Center Drive
Duluth, MN 55806–1786
Telephone: (218) 628-3641
FAX: (218) 628–0488

St. Paul Branch
Cummins North Central, Inc.
2690 Cleveland Ave. North
St. Paul, MN 55113
Telephone: (651) 636-1000
FAX: (651) 638-2497

Mississippi

Jackson - (Branch of Memphis)
Cummins Mid-South, Inc.
325 New Highway 49 South
Jackson, MS 39288-4224
Telephone:
Admin.: (601) 932-7016
Parts: (601) 932-2720
Service: (601) 939-1800
FAX: (601) 932–7399

Missouri

Kansas City Distributor and Branch
Cummins Mid-America, Inc.
8201 NE Parvin Road
Kansas City, MO 64161
Telephone: (816) 414–8200
FAX: (816) 414–8299

Joplin Branch
Cummins Mid-America, Inc.
3507 East 20th Street
Joplin, MO 64801
Telephone: (417) 623-1661
FAX: (417) 623–1817

Springfield Branch
Cummins Mid-America, Inc.
3637 East Kearney
Springfield, MO 65803
Telephone: (417) 862-0777
FAX: (417) 862-4429

St. Louis Distributor
Cummins Gateway, Inc.
7210 Hall Street
St. Louis, MO 63147
Telephone: (314) 389-5400
FAX: (314) 389–9671

Columbia Branch
Cummins Gateway, Inc.
5221 Highway 763 North
Columbia, MO 65202
Telephone: (314) 449-3711
FAX: (314) 449–3712

Sikeston Branch
Cummins Gateway, Inc.
101 Keystone Drive
Sikeston, MO 63801
Telephone: (314) 472-0303
FAX: (314) 472–0306

Industrial Power Branch
Cummins Gateway, Inc.
3256 E. Outer Road
Scott City, MO 63788
Telephone: (573) 335-9399
FAX: (573) 335-7062

Montana

Billings - (Branch of Denver)
Cummins Rocky Mountain, Inc.
5151 Midland Road
Billings, MT 59101
Telephone: (406) 245-4194
FAX: (406) 245–7923

Great Falls - (Branch of Denver)
Cummins Rocky Mountain, Inc.
415 Vaughn Road
Great Falls, MT 59404
Telephone: (406) 452-8561
FAX: (406) 452–9911

Missoula - (Branch of Seattle)
Cummins Northwest, Inc.
4950 North Reserve Street
Missoula, MT 59802-1498
Telephone: (406) 728-1300
FAX: (406) 728-8523

Nebraska

Omaha Distributor and Branch
Cummins Great Plains Diesel, Inc.
5515 Center Street
P.O. Box 6068
Omaha, NE 68106
Telephone: (402) 551-7678 (24 Hours)
FAX: (402) 551–1952

Kearney Branch
Cummins Great Plains Diesel, Inc.
515 Central Avenue
Kearney, NE 68847
Telephone: (308) 234-1994
FAX: (308) 234–5776

Nevada

Elko - (Branch of Salt Lake City)
Cummins Intermountain, Inc.
5370 East Idaho Street
Elko, NV 89801
Telephone: (775) 738-6405
FAX: (775) 738–1719

Las Vegas - (Branch of Salt Lake City)
Cummins Intermountain, Inc.
2750 Losee Road
North Las Vegas, NV 89030
Telephone: (702) 399-2339
FAX: (702) 399–7457

Sparks - (Branch of Salt Lake City)
Cummins Intermountain, Inc.
150 Glendale Avenue
Sparks, NV 89431
Telephone: (775) 331-4983
FAX: (775) 331–7429

New Jersey

Newark - (Branch of Bronx)
Cummins Metropower, Inc.
41-85 Doremus Ave.
Newark, NJ 07105
Telephone: (973) 491–0100
FAX: (973) 578–8873

New Mexico

Albuquerque - (Branch of Phoenix)
Cummins Southwest, Inc.
1921 Broadway N.E.
Albuquerque, NM 87102
Telephone: (505) 247-2441
FAX: (505) 842–0436

Farmington - (Branch of Phoenix)
Cummins Southwest, Inc.
1101 North Troy King Road
Farmington, NM 87401
Telephone: (505) 327-7331
FAX: (505) 326–2948

New York

Bronx Distributor
Cummins Metropower, Inc.
890 Zerega Avenue
Bronx, NY 10473
Telephone: (718) 892-2400
FAX: (718) 892–0055

Albany - (Branch of Boston)
Cummins Northeast, Inc.
101 Railroad Avenue
Albany, NY 12205
Telephone: (518) 459-1710
FAX: (518) 459–7815

Buffalo - (Branch of Boston)
Cummins Northeast, Inc.
480 Lawrence Bell Dr.
Williamsville, NY 14221-7090
Telephone: (716) 631-3211
FAX: (716) 626–0799

Syracuse - (Branch of Boston)
Cummins Northeast, Inc.
29 Eastern Avenue
Syracuse, NY 13211
Telephone: (315) 437-2751
FAX: (315) 437-8141

North Carolina

Charlotte Distributor
Cummins Atlantic, Inc.
11101 Nations Ford Road (28273)
P.O. Box 240729
Charlotte, NC 28224-0729
Telephone: (704) 588-1240
FAX: (704) 587-4870

Charlotte Branch
Cummins Atlantic, Inc.
3700 North Interstate 85
Charlotte, NC 28206
Telephone: (704) 596-7690
FAX: (704) 596–3038

Greensboro Branch
Cummins Atlantic, Inc.
513 Preddy Boulevard (27406)
P.O. Box 22066
Greensboro, NC 27420-2066
Telephone: (336) 275-4531
FAX: (336) 275–8304

Wilson Branch
Cummins Atlantic, Inc.
1514 Cargill Avenue (27893)
P.O. Box 1177
Wilson, NC 27894-1117
Telephone: (252) 237-9111
FAX: (252) 237–9132

North Dakota

Fargo - (Branch of St. Paul)
Cummins North Central, Inc.
3801 - 34th Ave. SW
Fargo, ND 58104
Telephone: (701) 282-2466
FAX: (701) 277–5399

Grand Forks - (Branch of St. Paul)
Cummins North Central, Inc.
4728 Gateway Drive
Grand Forks, ND 58201
Telephone: (701) 775-8197
FAX: (701) 775–4833

Minot - (Branch of St. Paul)
Cummins North Central, Inc.
1501 - 20th Avenue, S.E.
Minot, ND 58702
Telephone: (701) 852-3585
FAX: (701) 852–3588

Ohio

Columbus Distributor and Branch
Cummins Interstate Power, Inc.
4000 Lyman Drive
Hilliard (Columbus), OH 43026
Telephone: (614) 771-1000
FAX: (614) 771–0769

Columbus Distributor
Cummins Interstate Power, Inc.
2297 Southwest Bldv., Suite K
Grove City, OH 43123
Telephone: (614) 771-1000
FAX: (614) 527-2576

Cincinnati Branch
Cummins Interstate Power, Inc.
10470 Evendale Drive
Cincinnati, OH 45241
Telephone: (513) 563-6670
FAX: (513) 563–0594

Cleveland Branch
Cummins Interstate Power, Inc.
7585 Northfield Road
Cleveland, OH 44146
Telephone: (440) 439-6800
FAX: (440) 439–7390

Strasburg Branch
Cummins Interstate Power, Inc.
777 South Wooster Avenue
Strasburg, OH 44680
Telephone: (216) 878-5511
FAX: (216) 878–7666

Toledo Branch
Cummins Interstate Power, Inc.
801 Illinois Avenue
Maumee
(Toledo), OH 43537
Telephone: (419) 893-8711
FAX: (419) 893–5362

Youngstown Branch
Cummins Interstate Power, Inc.
7145 Masury Road
Hubbard
(Youngstown), OH 44425
Telephone: (216) 534-1935
FAX: (216) 534–5606

Oklahoma

Oklahoma City - (Branch of Arlington)
Cummins Southern Plains, Inc.
5800 West Reno
Oklahoma City, OK 73127
Telephone: (405) 946-4481 (24 hours)
FAX: (405) 946–3336

Tulsa - (Branch of Arlington)
Cummins Southern Plains, Inc.
16525 East Skelly Drive
Tulsa, OK 74116
Telephone: (918) 234–3240
FAX: (918) 234–2342

Oregon

Bend - (Branch of Seattle)
Cummins Northwest, Inc.
3500 N. Highway 97 (97701-5729)
P.O. Box 309
Bend, OR 97709-0309
Telephone: (541) 389-1900
FAX: (541) 389–1909

Coburg/Eugene - (Branch of Seattle)
Cummins Northwest, Inc.
91201 Industrial Parkway
Coburg, OR 97401
(Mailing Address)
P.O. Box 10877
Eugene, OR 97440-2887
Telephone: (541) 687-0000
FAX: (541) 687–1977

Medford - (Branch of Seattle)
Cummins Northwest, Inc.
4045 Crater Lake Highway
Medford, OR 97504-9796
Telephone: (541) 779-0151
FAX: (541) 772–2395

Pendleton - (Branch of Seattle)
Cummins Northwest, Inc.
223 S.W. 23rd Street
Pendleton, OR 97801-1810
Telephone: (541) 276-2561
FAX: (541) 276-2564

Portland - (Branch of Seattle)
Cummins Northwest, Inc.
4711 N. Basin Avenue
P. O. Box 2710 (97208-2710)
Portland, OR 97217-3557
Telephone: (503) 289-0900
FAX: (503) 286-5938

Pennsylvania

Philadelphia Distributor
Cummins Power Systems, Inc.
2727 Ford Road
Bristol, PA 19007
Telephone: (215) 785-6005 and
(609) 563–0005
FAX: (215) 785-4085

Bristol Branch
Cummins Power Systems, Inc.
2727 Ford Road
Bristol, PA 19007
Telephone: (215) 785-6005 and
(609) 563–0005
FAX: (215) 785–4728

Pittsburgh Branch
Cummins Power Systems, Inc.
3 Alpha Drive
Pittsburgh, PA 15238–2901
Telephone: (412) 820–8300
FAX: (412) 820–8308

Harrisburg Branch
Cummins Power Systems, Inc.
4499 Lewis Road
Harrisburg, PA 17111-2541
Telephone: (717) 564-1344
FAX: (717) 558-8217

Puerto Rico

Puerto Nuevo - (Branch of Tampa)
Cummins Diesel Power, Inc.
#31 Calle “C”
El Matadero
Puerto Nuevo, Puerto Rico 00920
Telephone: (787) 793–0300
FAX: (787) 793–1072

South Carolina

Charleston - (Branch of Charlotte)
Cummins Atlantic, Inc.
3028 West Montague Avenue
Charleston, SC 29418–5593
Telephone: (843) 554-5112
FAX: (843) 745–0745

Charleston - (Branch of Charlotte)
Cummins Atlantic Inc.
231 Farmington Road
Charleston, SC 29483
Telephone: (843) 851-9819
FAX: (843) 875–4338

Columbia - (Branch of Charlotte)
Cummins Atlantic, Inc.
1233 Bluff Road (29201)
P.O. Box 13543
Columbia, SC 29201–3543
Telephone: (803) 799-2410
FAX: (803) 779–3427

South Dakota

Sioux Falls - (Branch of Omaha)
Cummins Great Plains Diesel, Inc.
701 East 54th Street North
Sioux Falls, SD 57104
Telephone: (605) 336-1715
FAX: (605) 336–1748

Tennessee

Memphis Distributor & Distribution Center
Cummins Mid-South, Inc.
666 Riverside Drive
Memphis, TN 38703
Telephone: (901) 577-0666
FAX: (901) 522–8758

Chattanooga - (Branch of Atlanta)
Cummins South, Inc.
1509 East 26th Street
Chattanooga, TN 37407-1095
Telephone: (615) 629-1447
FAX: (615) 629–1494

Knoxville - (Branch of Louisville)
Cummins Cumberland, Inc.
1211 Ault Road
Knoxville, TN 37914
Telephone: (423) 523-0446
FAX: (423) 523-0343

Memphis Branch
Cummins Mid-South, Inc.
1784 E. Brooks Road
Memphis, TN 38116
Telephone:
Sales/Admin.: (901) 345-7424
Parts: (901) 345-1784
Service: (901) 345-6185
FAX: (901) 346–4735

Nashville - (Branch of Louisville)
Cummins Cumberland, Inc.
706 Spence Lane
Nashville, TN 37217
Telephone: (615) 366-4341
FAX: (615) 366–5693

Texas

Arlington Distributor
Cummins Southern Plains, Inc.
600 N Watson Road
Arlington, TX 76004-3027
Telephone: (817) 640-6801
FAX: (817) 640-6852

Amarillo Branch
Cummins Southern Plains, Inc.
5224 Interstate 40 -
Expressway East
P.O. Box 31570
Amarillo, TX 79120-1570
Telephone: (806) 373-3793 (24 hours)
FAX: (806) 372–8547

Dallas Branch
Cummins Southern Plains, Inc.
3707 Irving Boulevard
Dallas, TX 75247
Telephone: (214) 631-6400 (24 hours)
FAX: (214) 631–2322

El Paso - (Branch of Phoenix)
Cummins Southwest, Inc.
14333 Gateway West
El Paso, TX 79927
Telephone: (915) 852-4200
FAX: (915) 852-3295

Fort Worth Branch
Cummins Southern Plains, Inc.
3250 North Freeway
Fort Worth, TX 76111
Telephone: (817) 624-2107 (24 hours)
FAX: (817) 624–3296

Houston Branch
Cummins Southern Plains, Inc.
4750 Homestead Road
P.O. Box 1367
Houston, TX 77251-1367
Telephone: (713) 675-7421 (24 hours)
FAX: (713) 675–1515

Mesquite Branch
Cummins Southern Plains, Inc.
2615 Big Town Blvd.
Mesquite, TX 75150
Telephone: (214) 321-5555 (24 hours)
FAX: (214) 328–2732

Odessa Branch
Cummins Southern Plains, Inc.
1210 South Grandview
P.O. Box 633
Odessa, TX 79760-0633
Telephone: (915) 332-9121 (24 hours)
FAX: (915) 333–4655

San Antonio Branch
Cummins Southern Plains, Inc.
6226 Pan Am Expressway North
P.O. Box 18385
San Antonio, TX 78218–0385
Telephone: (512) 655-5420 (24 hours)
FAX: (512) 655–3865

Houston Onan Branch
Southern Plains Power
A Division of Cummins Southern Plains
1155 West Loop North
Houston, TX 77055
Telephone: (713) 956-0020
FAX: (713) 956-0266

Utah

Salt Lake City Distributor
Cummins Intermountain, Inc.
1030 South 300 West
Salt Lake City, UT 84101
Telephone: (801) 355-6500
FAX: (801) 524–1351

Vernal Branch
Cummins Intermountain, Inc.
1435 East 335 South
Vernal, UT 84078
Telephone: (435) 789-5732
FAX: (435) 789-2853

Virginia

Cloverdale - (Branch of Charlotte)
Cummins Atlantic, Inc.
263 Simmons Drive
Cloverdale, VA 24077
Telephone: (540) 966-3169
FAX: (540) 966-3749

Richmond - (Branch of Charlotte)
Cummins Atlantic, Inc.
3900 Deepwater Terminal Road
Richmond, VA 23234
Telephone: (804) 232-7891
FAX: (804) 232-7428

Tidewater - (Branch of Charlotte)
Cummins Atlantic, Inc.
Atlantic Power Generation
3729 Holland Blvd.
Chesapeake, VA 23323
Telephone: (757) 485-4848
FAX: (757) 485-5085

Washington

Seattle Distributor
Cummins Northwest, Inc.
811 S.W. Grady Way (98055-2944)
P.O. Box 9811
Renton, WA 98057–9811
Telephone: (425) 235-3400
FAX: (425) 235–8202

Chehalis Branch
Cummins Northwest, Inc.
926 N.W. Maryland
Chehalis, WA 98532-0339
Telephone: (360) 748-8841
FAX: (360) 748–8843

Spokane Branch
Cummins Northwest, Inc.
11134 W. Westbow Blvd.
Spokane, WA 99204
Telephone: (509) 455–4411
FAX: (509) 624–4681

Tacoma Branch
Cummins Northwest, Inc.
3701 Pacific Highway East
Tacoma, WA 98424-1135
Telephone: (253) 922-2191
FAX: (253) 922–2379

Yakima Branch
Cummins Northwest, Inc.
1905 East Central Avenue (98901-3609)
P.O. Box 9129
Yakima, WA 98909-0129
Telephone: (509) 248-9033
FAX: (509) 248–9035

West Virginia

Charleston - (Branch of Louisville)
Cummins Cumberland, Inc.
3100 MacCorkle Ave. SW
P.O. Box 8456
South Charleston, WV 25303
Telephone: (304) 744-6373
FAX: (304) 744-8605

Fairmont - (Branch of Louisville)
Cummins Cumberland, Inc.
South Fairmount Exit, I-79
145 Middletown Road
Fairmont, WV 26554
Telephone: (304) 367-0196
FAX: (304) 367–1077

Wisconsin

DePere Distributor
Cummins Great Lakes, Inc.
Corporate Office
875 Lawrence Drive
P.O. Box 5070
DePere, WI 54115–5070
Telephone: (920) 337-1991
FAX: (920) 337-9746

Chippewa Falls Branch
Cummins Great Lakes, Inc.
2030 St. Highway 53
Chippewa Falls, WI 54729
Telephone: (715) 720-0680
FAX: (715) 720–0685

DePere Branch
Cummins Great Lakes, Inc.
939 Lawrence Drive
P. O. Box 5070
DePere, WI 54115–5070
Telephone: (920) 336-9631
(800) 236–1191
FAX: (920) 336–8984

Milwaukee Branch
Cummins Great Lakes, Inc.
9401 South 13th Street
P.O. Box D
Oak Creek, WI 53154
Telephone: (414) 768-7400
(800) 472-8283
FAX: (414) 768-9441

Wausau Branch
Cummins Great Lakes, Inc.
4703 Rib Mountain Drive
Wausau, WI 54401
Telephone: (715) 359-6888
(800) 236-3744
FAX: (715) 359-3744

Wyoming

Gillette - (Branch of Denver)
Cummins Rocky Mountain, Inc.
2700 Hwy. 14 & 16 North
P.O. Box 1207 (82717)
Gillette, WY 82716
Telephone: (307) 682-9611
FAX: (307) 682–8242

Rock Springs - (Branch of Salt Lake City)
Cummins Intermountain, Inc.
2000 Foothill Blvd.
P.O. Box 1634
Rock Springs, WY 82901
Telephone: (307) 362-5168
FAX: (307) 362–5171

Distributors and Branches - Canada

Alberta

Edmonton Distributor and Branch
Cummins Alberta
11751 - 181 Street
Edmonton, AB T5S 2K5
Telephone: (780) 455-2151
FAX: (780) 454-9512

Calgary Branch
Cummins Alberta
4887 - 35th Street S.E.
Calgary, Alberta T2B 3H6, Canada
Telephone: (403) 569-1122
FAX: (403) 569-0027

Grande Prairie
Cummins Alberta - Grande Praire
RR2, Site 9, Box 22
Sexsmith, AB CN T0H 3C0
Telephone: (780) 568-3359
FAX: (780) 568-2263

Hinton Branch
Cummins Alberta
135 Veats Avenue
Hinton, Alberta T7V 1S8, Canada
Telephone: (780) 865-5111
FAX: (780) 865-5714

Lethbridge Branch
Cummins Alberta
240 - 24th Street North
Lethbridge, Alberta T1H 3T8, Canada
Telephone: (403) 329-6144
FAX: (403) 320-5383

British Columbia

Vancouver Distributor
Cummins British Columbia
18452 - 96th Avenue
Surrey, B.C., Canada
V4N 3P8
Telephone: (604) 882-5000
FAX: (604) 882-5080

Kamloops Branch
Cummins British Columbia
976 Laval Crescent
Kamloops, B.C. Canada V2C 5P5
Telephone: (250) 828-2388
FAX: (250) 828-6713

Prince George Branch
Cummins British Columbia
102- 3851- 18th Avenue
Prince George, B.C. V2N 1B1
Telephone: (250) 564-9111
FAX: (250) 564-5853

Sparwood Branch
Cummins British Columbia
731 Douglas Fir Road
Sparwood, B.C. VOB 2GO, Canada
Telephone: (250) 425-0522
FAX: (250) 425–0323

Tumbler Ridge Branch
Cummins British Columbia
Industrial Site, Box 226
Tumbler Ridge, B.C.
Canada VOC 2WO
Telephone: (250) 242-4217
FAX: (250) 242–4906

Manitoba

Winnipeg Distributor
Cummins Mid-Canada Ltd.
489 Oak Point Road
P.O. Box 1860
Winnipeg, MB R3C 3R1, Canada
Telephone: (204) 632-5470
FAX: (204) 697–0267

New Brunswick

Fredericton - (Branch of Montreal)
Cummins Eastern Canada, Inc.
R.R.#1 Doak Road
P.O. Box 1178, Station 'A'
Fredericton,
New Brunswick E3B 4X2, Canada
Telephone: (506) 451-1929
FAX: (506) 451-1921

Newfoundland

St. John's - (Branch of Montreal)
Cummins Eastern Canada, Inc.
122 Clyde Avenue
Donovans Industrial Park
Mount Pearl, Newfoundland A1N 2C2
Canada
Telephone: (709) 747-0176
FAX: (709) 747–2283

Wabush - (Branch of Montreal)
Cummins Eastern Canada, Inc.
Wabush Industrial Park
Wabush, Newfoundland A0R 1B0
Telephone: (709) 282-3626
FAX: (709) 282–3108

Nova Scotia

Halifax - (Branch of Montreal)
Cummins Eastern Canada, Inc.
50 Simmonds Drive
Dartmouth, Nova Scotia B3B 1R3
Telephone: (902) 468-7938
FAX: (902) 468–5177
Parts: (902) 468–6560

Ontario

Toronto Distributor
Cummins Ontario, Inc.
7175 Pacific Circle
Mississauga, ON L5T 2A5
Telephone: (905) 795–0050
FAX: (905) 795–0021

Kenora - (Branch of Winnipeg)
Cummins Mid-Canada Ltd.
Highway 17 East
P.O. Box 8
Kenora, Ontario P9N 3X1
Telephone: (807) 548–1941
FAX: (807) 548–8302

Ottawa Branch
Cummins Ontario Inc.
3189 Swansea Crescent
Ottawa, Ontario K1G 3W5,
Telephone: (613) 736-1146
FAX: (613) 736-1202

Thunder Bay Branch
Cummins Ontario Inc.
1400 W. Walsh Street
Thunder Bay
Ontario P7E 4X4
Telephone: (807) 577-7561
FAX: (807) 577–1727

Whitby Branch
Cummins Ontario Inc.
1311 Hopkins Street
Whitby, Ontario L1N 2C2, Canada
Telephone: (905) 668-6886
FAX: (905) 668-1375

Quebec

Montreal Distributor
Cummins Eastern Canada, Inc.
7200 Trans Canada Highway
Pointe Claire, Quebec H9R 1C2,
Telephone: (514) 695-8410
FAX: (514) 695–8917

Montreal Branch
Cummins Eastern Canada, Inc.
7200 Trans Canada Highway
Pointe Claire, Quebec H9R 1C2,
Canada
Telephone: (514) 695-8410
Sales: (514) 695-4555
Parts: (514) 694-5880
FAX: (514) 695–8917

Dorval Onan Branch
Cummins, Eastern Canada, Inc.
580 Lepihe
Dorval, Quebec H9H 1G2
Telephone: (514) 631-5000
FAX: (514) 631-0104

Quebec City Branch
Cummins Diesel
Branch of Cummins Americas, Inc.
2575 Dalton Street
Ste. Foy, Quebec G1P 3S7
Telephone: (418) 653-6411
FAX: (418) 653-5844

Val D'Or Branch
Cummins, Eastern Canada, Inc.
1025 Rue Del
Val D'Or, Quebec 59P 4P6
Telephone: (819) 825-0993
FAX: (819) 825-8488

Saskatchewan

Lloydminster - (Branch of Winnipeg)
Cummins Mid-Canada Ltd.
4005 52nd
Lloydminster, SK S9V 0Y9
Telephone: (305) 825–2062
FAX: (305) 825–6702

Regina - (Branch of Winnipeg)
Cummins Mid-Canada Ltd.
110 Kress Street
P.O. Box 98
Regina, SK S4P 2Z5
Telephone: (306) 721-9710
FAX: (306) 721–2962

Saskatoon - (Branch of Winnipeg)
Cummins Mid-Canada, Ltd.
3001 Faithful Avenue
P.O. Box 7679
Saskatoon, SK S7K 4R4, Canada
Telephone: (306) 933-4022
FAX: (306) 242–1722

Distributors and Branches - Australia

Branches:

Gepps Cross
Cummins Engine Company, Pty. Ltd.
P.O. Box 108
Blair Athol, 5084
South Australia, Australia
Location:
45-49 Cavan Road
Gepps Cross, 5094
Telephone: (61-8) 8262-5211

Dosra
Cummins Engine Company, Pty. Ltd.
P.O. Box 124
Darra, 4076
Queensland, Australia
Location:
33 Kimberley Street
Darra, 4076, Australia
Telephone: (61-7) 3375-3277

Bunbury
Cummins Engine Company, Pty. Ltd.
P.O. Box 1751
Bunbury, WA 6230
Australia
Location:
11 Dryanda Court
Picton, WA 6230
Telephone: (61-8) 9725-6777
FAX: (61-8) 9725-6444

Cairns
Cummins Engine Company, Pty. Ltd.
P.O. Box 7189
Cairns Mail Centre, 4870
Queensland, Australia
Location:
Liberty Street
Cairns, 4870
Telephone: (61-7) 935-2999

Campbellfield
Cummins Engine Company, Pty. Ltd.
Private Bag 9
Campbellfield, 3061
Victoria, Australia
Location:
1788-1800 Hume Highway
Campbellfield, 3061
Telephone: (613) 9357-9200

Dandenong
Cummins Engine Company, Pty. Ltd.
Lot 7 Greens Road
Dandenong, 3175
Victoria, Australia
Telephone: (613) 9706-8088

Darwin
Cummins Engine Company, Pty. Ltd.
P.O. Box 37587
Winnellie, 0821
Northern Territory, Australia
Location:
Lot 1758 Graffin Crescent
Winnellie, 0821
Telephone: (61-8) 8947-0766

Devonport
Cummins Engine Company, Pty. Ltd.
P.O. Box 72E
Tasmania, Australia
Location:
2 Matthews Way
Devonport, 7310
Telephone: (61-3) 6424-8800

Emerald
Cummins Engine Company, Pty. Ltd.
P.O. Box 668
Emerald, 4720
Queensland, Australia
Location:
Capricorn Highway
Emerald, 4720
Telephone: (61-7) 4982-4022

Grafton
Cummins Engine Company, Pty. Ltd.
P.O. Box 18
South Grafton, 2461
New South Wales, Australia
Location:
18-20 Induna Street
South Grafton, 2461
Telephone: (61-2) 6642-3655

Hexham
Cummins Engine Company, Pty. Ltd.
21 Galleghan Street
Hexham
New South Wales, Australia
Telephone: (61-2) 4964-8466
FAX: (61-2) 4964-8616

Kalgoorlie
Cummins Engine Company, Pty. Ltd.
P.O. Box 706
Kalgoorlie, 6430
Western Australia, Australia
Location:
16 Atbara Street
Kalgoorlie, 6430
Telephone: (61-8) 9021-2588

Karratha
Cummins Engine Company, Pty. Ltd.
P.O. Box 377
Karratha, WA 6714
Australia
Location:
1490 Lambert Road
Karratha, WA 6714
Australia
Telephone: (61-8) 9144-4646
FAX: (61-8) 9143-1507

Laverton
Cummins Engine Company, Pty. Ltd.
Locked Bag 1
Laverton, Victoria 3028
Australia
Location:
195 Boundary Road
Laverton North, Victoria 3028
Australia
Telephone: (61-3) 9360-0800
FAX: (61-3) 9360-0438

Leeton
Cummins Engine Company, Pty. Ltd.
P.O. Box 775
Leeton, NSW 2705
Australia
Location:
29 Brady Way
Leeton, NSW 2705
Australia
Telephone: (61-2) 6953-3077
FAX: (61–2) 6953-3109

Mackay
Cummins Engine Company, Pty. Ltd.
P.O. Box 842
Mackay, 4740
Queensland, Australia
Location:
4 Presto Avenue
Mackay, 4746
Telephone: (61-7) 4955-1222

Mount Gambier
Cummins Engine Company, Pty. Ltd.
P.O. Box 2219
Mount Gambier, 5290
South Australia, Australia
Location:
2 Avey Road
Mount Gambier, 5290
Telephone: (61-87) 25-6422

Penrith
Cummins Engine Company, Pty. Ltd.
P.O. Box 132
Cambridge Park, 2747
New South Wales, Australia
Location:
7 Andrews Road
Penrith, 2750
Telephone: (61-2) 4729-1313

Queanbeyan
Cummins Engine Company, Pty. Ltd.
P.O. Box 527
Queanbeyan, 2620
New South Wales, Australia
Location:
15-27 Bayldon Road
Queanbeyan, 2620
Telephone: (61-2) 6297-3433
FAX: (61-2) 6297-6709

Regency Park
Cummins Engine Company, Pty. Ltd.
P.O. Box 2147
Regency Park, SA 5942
Australia
Location:
11 Manton Street
Hindmarsh, SA 5942
Australia
Telephone: (61-8) 8346-3832
FAX: (61-8) 8340-2045

Swan Hill
Cummins Engine Company, Pty. Ltd.
P.O. Box 1264
Swan Hill, 3585
Victoria, Australia
Location:
5 McAllister Road
Swan Hill, 3585
Telephone: (61-3) 5032-1511

Tamworth
Cummins Engine Company, Pty. Ltd.
P.O. Box 677
Tamworth, 2320
New South Wales, Australia
Location:
Lot 65 Gunnedah Road
Tamworth, 2340
Telephone: (61-2) 6765-5455

Townsville
Cummins Engine Company, Pty. Ltd.
P.O. Box 7339
Garbutt Business Centre, QLD4814
Australia
Location:
704-710 Ingham Road
Townsville, QLD 4814
Telephone: (61-7) 4774-7733
FAX: (61-7) 4774-7640

Welshpool
Cummins Engine Company, Pty. Ltd.
P. O. Box 52
Welshpool, 6986
Western Australia, Australia
Location:
50 Kewdale Road
Welshpool, 6106
Telephone: (61-8) 9458-5911

Wetherill Park
Cummins Engine Company, Pty. Ltd.
Private Bag 150
Wetherill Park, NSW 2164
Australia
Location:
492-494 Victoria Street
Wetherill Park, NSW 2164
Australia
Telephone: (61-2) 9616-5300
FAX: (61-2) 9616-5399

Wodonga
Cummins Engine Company, Pty. Ltd.
P.O. Box 174
Wodonga, 3690
Victoria, Australia
Location:
9-11 McKoy Street
Wodonga, 3690
Telephone: (61-2) 6024-3655

Distributors and Branches - New Zealand

Auckland

Cummins Diesel Sales & Service (NZ) Ltd.
Private Bag 92804
Penrose, Auckland, New Zealand
Location:
440 Church Street
Penrose
Telephone: (64-9) 579-0085

Branches:

Auckland

Cummins Diesel Engines
Private Bag 92804
Penrose, Auckland, New Zealand
Location:
440 Church Street
Penrose
Telephone: (64-9) 579-0085

Christchurch

Cummins Diesel Engines
P.O. Box 16-149
Hornby, Christchurch, New Zealand
Location:
35 Parkhouse Road
Sockburn, Christchurch
Telephone: (64-3) 348-8170

Mt. Maunganui

Cummins Diesel Engines
P.O. Box 4005
Mt. Maunganui, New Zealand
Location:
101 Totara Street
Mt. Maunganui
Telephone: (64-7) 575-0545

Palmerston North

Cummins Diesel Engines
P.O. Box 9024
Palmerston North, New Zealand
Location:
852-860 Tremaine Avenue
Telephone: (64-6) 356-2209

NOTES

Section TS - Troubleshooting Symptoms

Section Contents

	Page
Troubleshooting Procedures and Techniques	TS-1
General Information	TS-1
Troubleshooting Symptoms Charts	TS-2
Alternator Not Charging or Insufficient Charging	TS-3
Coolant Contamination	TS-4
Coolant Loss	TS-5
Coolant Temperature Above Normal	TS-7
Coolant Temperature is Below Normal	TS-6
Engine Difficult to Start or Will Not Start (Exhaust Smoke)	TS-10
Engine Difficult to Start or Will Not Start (No Exhaust Smoke)	TS-12
Engine Noise Excessive	TS-14
Engine Power Output Low	TS-15
Engine Runs Rough at Idle, Warm Engine	TS-19
Engine Runs Rough or Misfires	TS-21
Engine Speed Surges at Low or High Idle	TS-23
Engine Starts But Will Not Keep Running	TS-24
Engine Vibration Excessive	TS-25
Engine Will Not Crank or Cranks Slowly	TS-26
Engine Will Not Reach Rated Speed (RPM)	TS-27
Engine Will Not Shut Off	TS-29
Exhaust Smoke Excessive Under Load	TS-30
Fuel Knock	TS-32
Fuel or Lubricating Oil Leaking From Exhaust Manifold	TS-33
General Information	TS-2
Lubricating Oil Contaminated	TS-34
Lubricating Oil Loss	TS-35

Page

Lubricating Oil Pressure High TS-37
Lubricating Oil Pressure Low TS-38
Smoke, White — Excessive TS-40

Troubleshooting Procedures and Techniques

General Information

This guide describes some typical engine operating problems, their causes, and some acceptable corrections to those problems. Unless noted otherwise, the problems listed are those which an operator can diagnose and repair.

⚠ WARNING ⚠

Performing troubleshooting procedures NOT outlined in this section can result in equipment damage or personal injury or death. Troubleshooting must be performed by trained, experienced technicians. Consult a Cummins Authorized Repair Location for diagnosis and repair beyond that which is outlined, and for symptoms not listed in this section. Before beginning any troubleshooting, refer to General Safety Instructions in Section i of this manual.

Follow the suggestions below for troubleshooting:

- Study the complaint thoroughly before acting
- Refer to the engine system diagrams
- Do the easiest and most logical things first
- Find and correct the cause of the complaint

Troubleshooting Symptoms Charts

General Information

Use the following charts to aid in diagnosing specific engine symptoms. Read each row of blocks from top to bottom. Follow the arrows through the chart to identify corrective action.

⚠ WARNING ⚠

Troubleshooting presents the risk of equipment damage, personal injury or death. Troubleshooting must be performed by trained experienced technicians.

Alternator Not Charging or Insufficient Charging

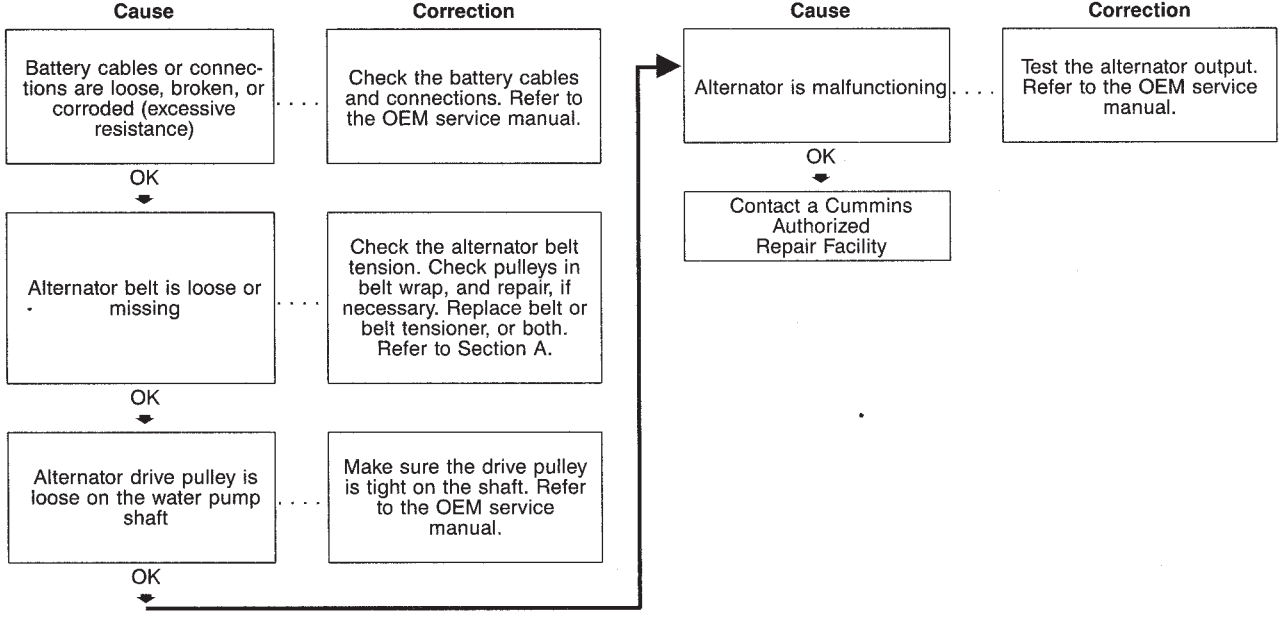

Coolant Contamination

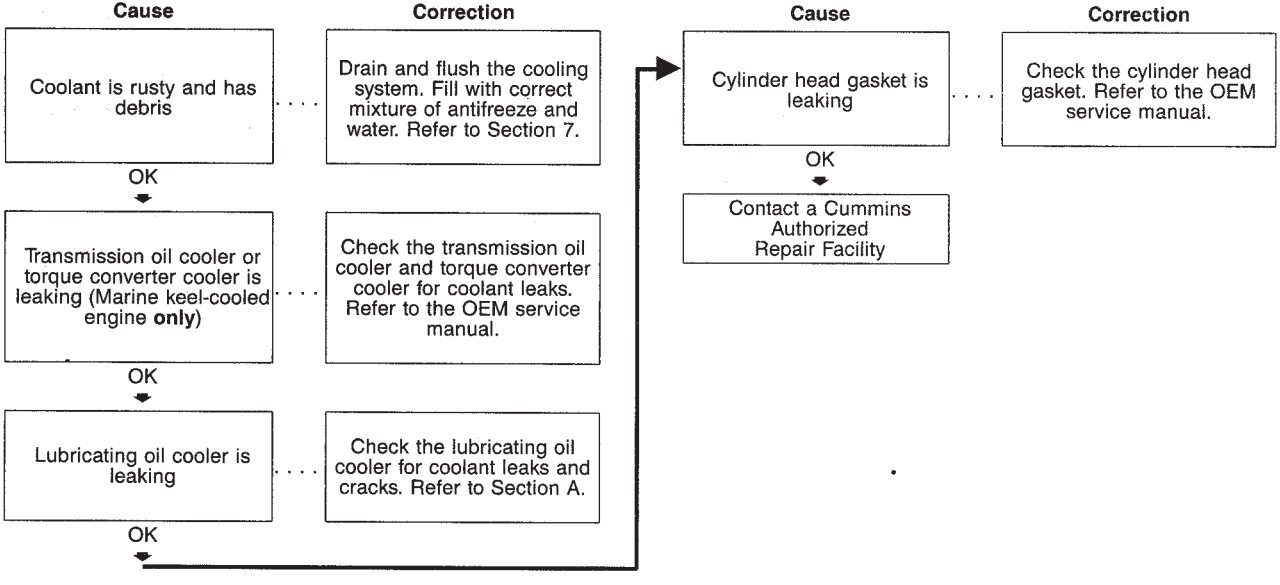

Coolant Loss

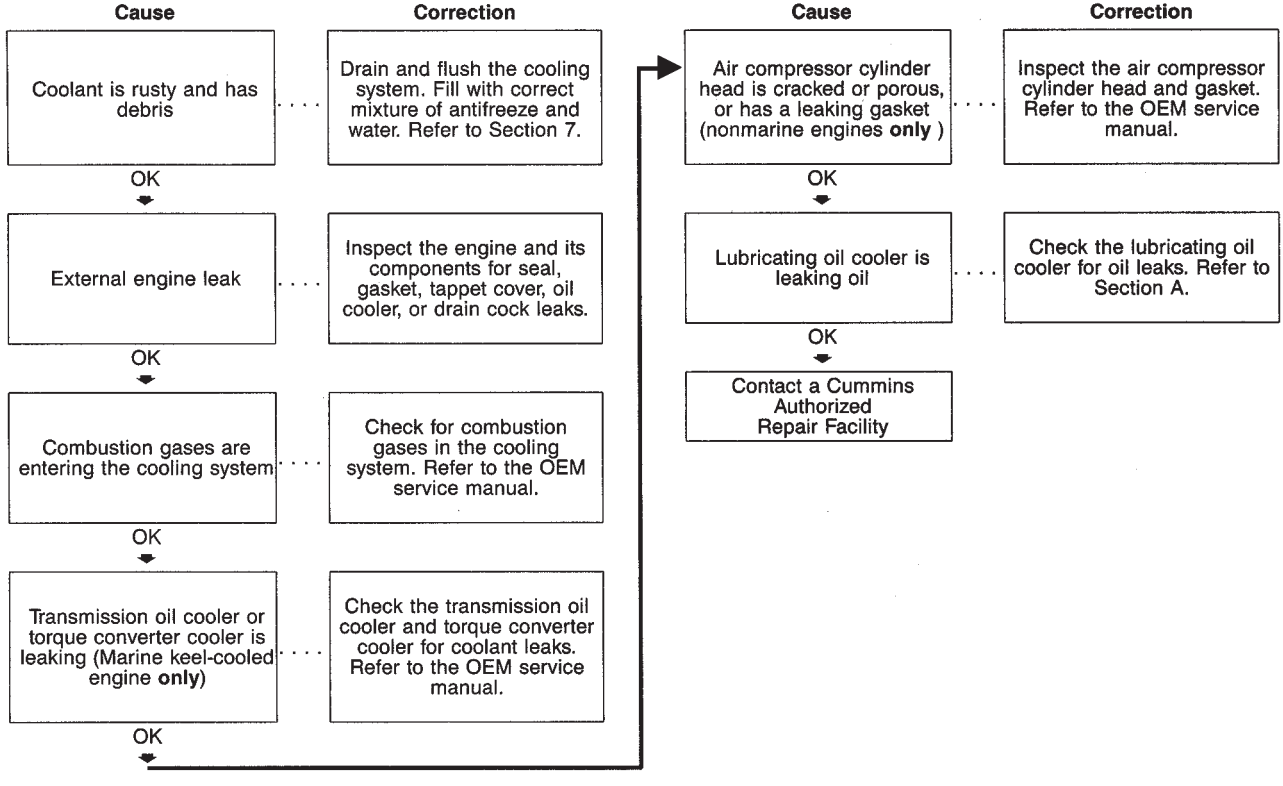

Coolant Temperature is Below Normal

Cause	Correction
Radiator shutters are stuck open or opening early	Check the shutter operation. Repair or replace the shutters if necessary. Refer to the OEM service manual.
OK	
Fan drive or fan controls are malfunctioning	Check the fan drive and controls. Refer to the OEM service manual.
OK	
Temperature switch failed	With the key system on, short out the harness at the temperature switch. If it engages, troubleshoot the sensor or check for air in the coolant system. Remove the sensor and make sure at ambient conditions the sensor is open; and at the correct temperature, 91°C [193°F], make sure the sensor closes. Replace if necessary.
OK	
Temperature gauge malfunction	Check or replace the temperature gauge. Refer to the OEM service manual.
OK	
Thermostat is **not** correct or is malfunctioning	Check the thermostat for the correct part number and for correct operation. Refer to the OEM service manual.
OK	
Contact a Cummins Authorized Repair Facility	

Coolant Temperature Above Normal

Cause	Correction
Coolant level is below specification	Inspect the engine and cooling system for external coolant leaks. Repair if necessary. Add coolant. Refer to Section 7.
OK	
Radiator fins are damaged or obstructed with debris	Inspect the radiator fins. Clean and repair the fins as necessary. Refer to the OEM service manual.
OK	
Cooling system hose is collapsed, restricted, or leaking	Inspect the radiator hoses. Refer to Section A.
OK	
Lubricating oil level is below specification	Check the oil level. Verify the dipstick calibration and the oil pan capacity. Fill the system to the specified level. Refer to Section 3.
OK	
Fan shroud is damaged or missing, or the air recirculation baffles are damaged or missing	Inspect the shroud and the recirculation baffles. Repair, replace, or install if necessary. Refer to the OEM service manual.
OK	
Fan drive belt is loose, tight, or **not** in alignment	Check the fan drive belt. Refer to Section A.
OK	
Fan drive or fan controls are malfunctioning	Check the fan drive and controls. Refer to the OEM service manual.
OK	
Radiator cap is **not** correct, is malfunctioning, or has low-pressure rating	Check the radiator pressure cap. Refer to the OEM service manual.
OK	

(Continued)

Coolant Temperature Above Normal (Continued)

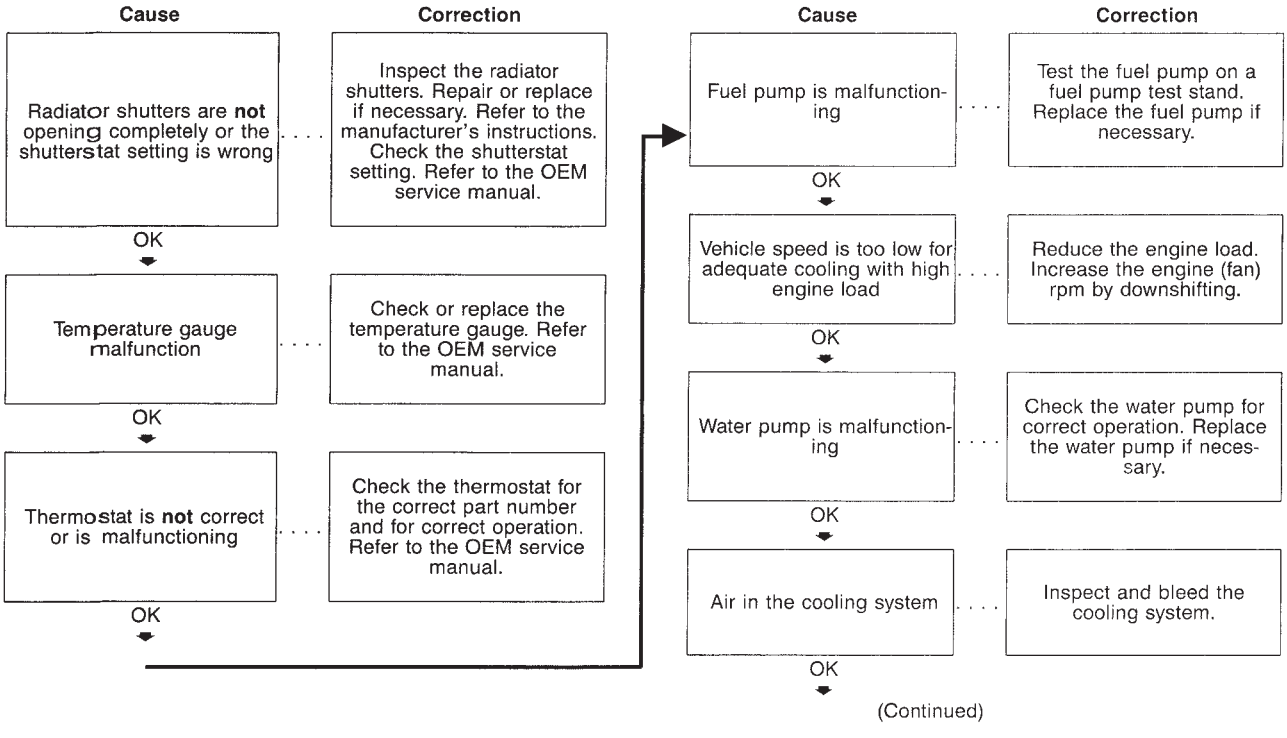

(Continued)

Coolant Temperature Above Normal (Continued)

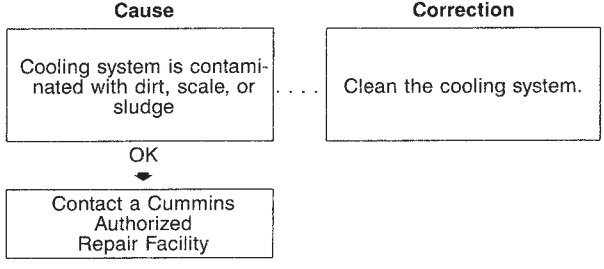

Engine Difficult to Start or Will Not Start (Exhaust Smoke)

Cause	Correction
Starting procedure is **not** correct	Verify the correct starting procedure. Refer to Section 1.
OK	
Engine cranking speed is too slow	Check the engine cranking speed with a handheld tachometer or electronic service tool. If the cranking speed is slower than 150 rpm, refer to the OEM service manual.
OK	
Starting aid is necessary for cold weather, or starting aid is malfunctioning	Check for correct operation of cold starting aid. Refer to Section 1.
OK	
Air in the fuel system	Bleed the fuel system and check for leaks. Refer to Section 5.
OK	
Fuel supply is **not** adequate	Check the flow through the filter to locate the source of the restriction. Refer to the OEM service manual.
OK	
Fuel drain backup	Verify the fuel return line is plumbed to the bottom of the fuel tank.
OK	
Fuel pump overflow valve is malfunctioning	Check the overflow valve. Replace if necessary. Refer to the OEM service manual.
OK	
Fuel transfer pump malfunctioning	Inspect the fuel transfer pump. Replace if necessary. Refer to the OEM service manual.
OK	

(Continued)

Engine Difficult to Start or Will Not Start (Exhaust Smoke) (Continued)

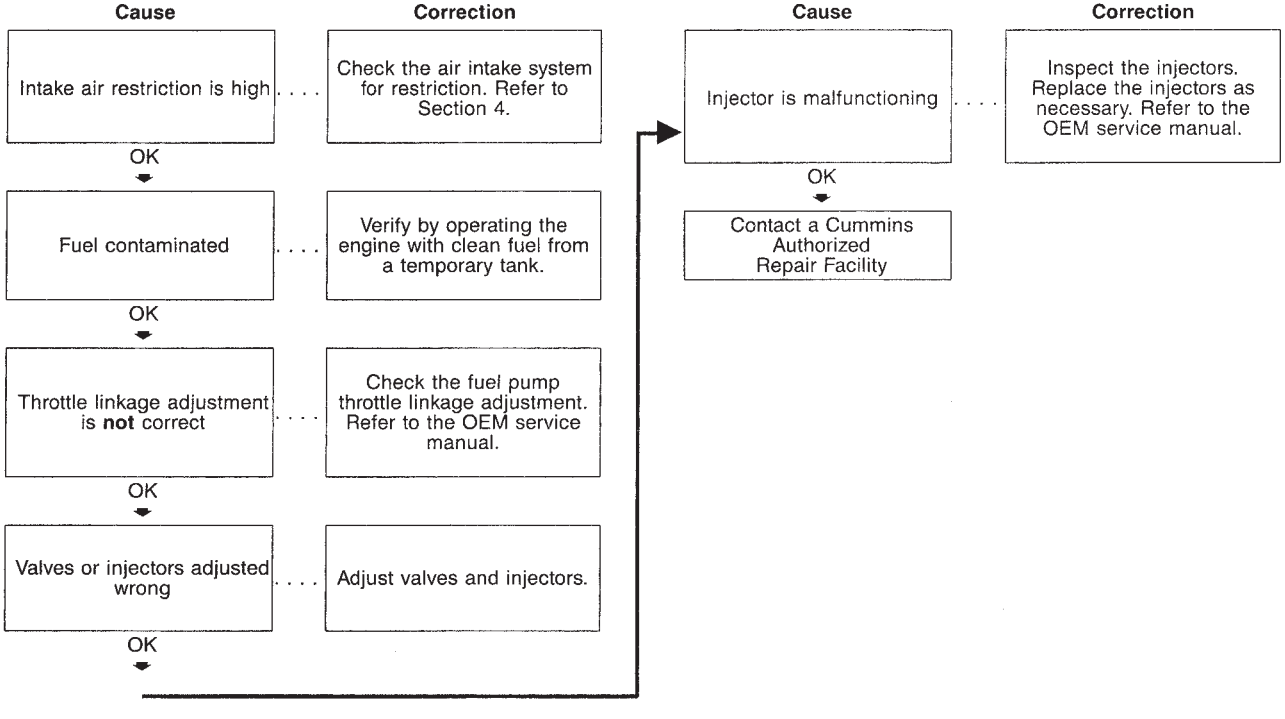

Engine Difficult to Start or Will Not Start (No Exhaust Smoke)

Cause	Correction
Starting procedure is **not** correct	Verify the correct starting procedure. Refer to Section 1.
OK	
Fuel level is low in the tank	Fill the supply tank. Refer to the OEM service manual.
OK	
Electrical or manual fuel shutdown binds	Check for loose wires and verify that the solenoid is functioning. Check to be sure manual shutoff lever is **not** binding at the injection pump. Refer to the OEM service manual.
OK	
Air in the fuel system	Bleed the fuel system and check for leaks. Refer to Section 5.
OK	
Fuel transfer pump malfunctioning	Inspect the fuel transfer pump. Replace if necessary. Refer to Section A.
OK	
Fuel drain backup	Verify the fuel return line is plumbed to the bottom of the fuel tank.
OK	
Fuel pump overflow valve is malfunctioning	Check the overflow valve. Replace if necessary. Refer to the OEM service manual.
OK	
Throttle linkage adjustment is **not** correct	Check throttle linkage adjustment. Refer to the OEM service manual.
OK	

(Continued)

Engine Difficult to Start or Will Not Start (No Exhaust Smoke) (Continued)

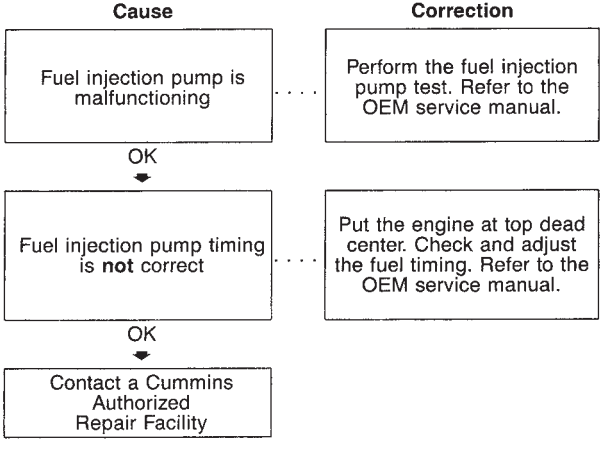

Engine Noise Excessive

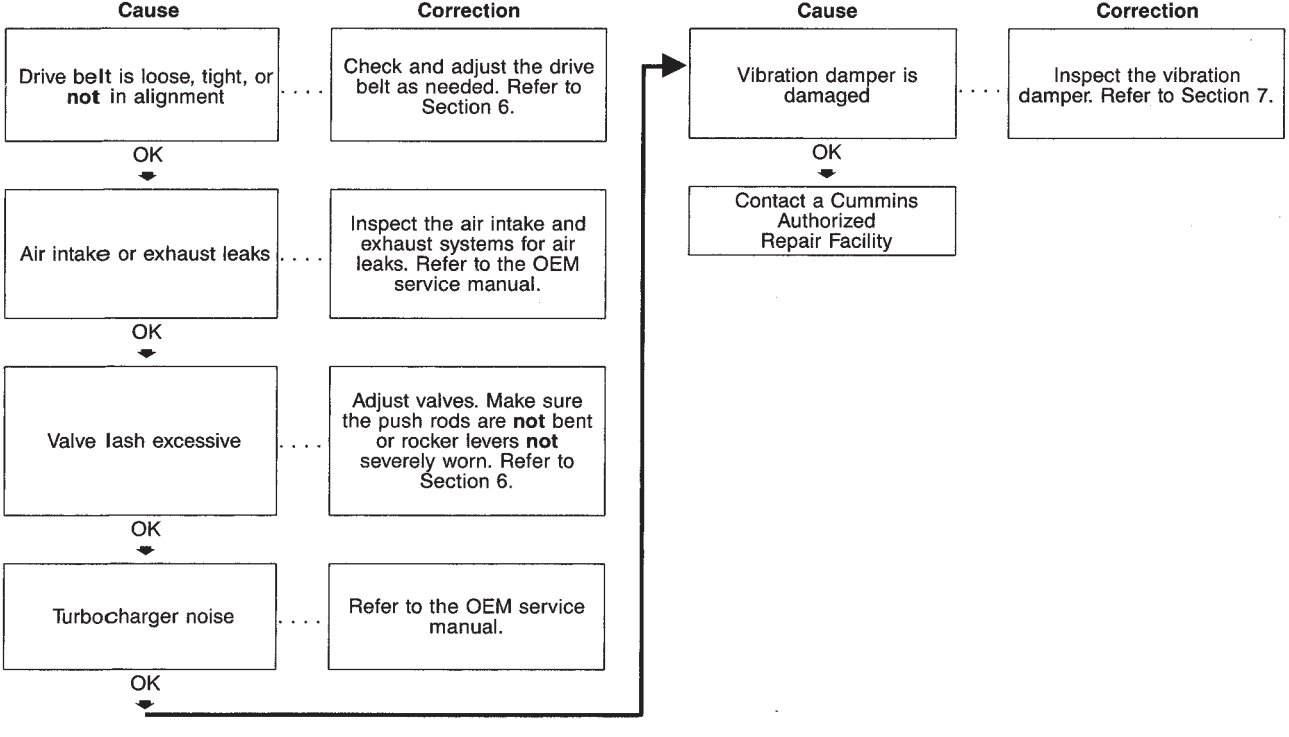

Engine Power Output Low

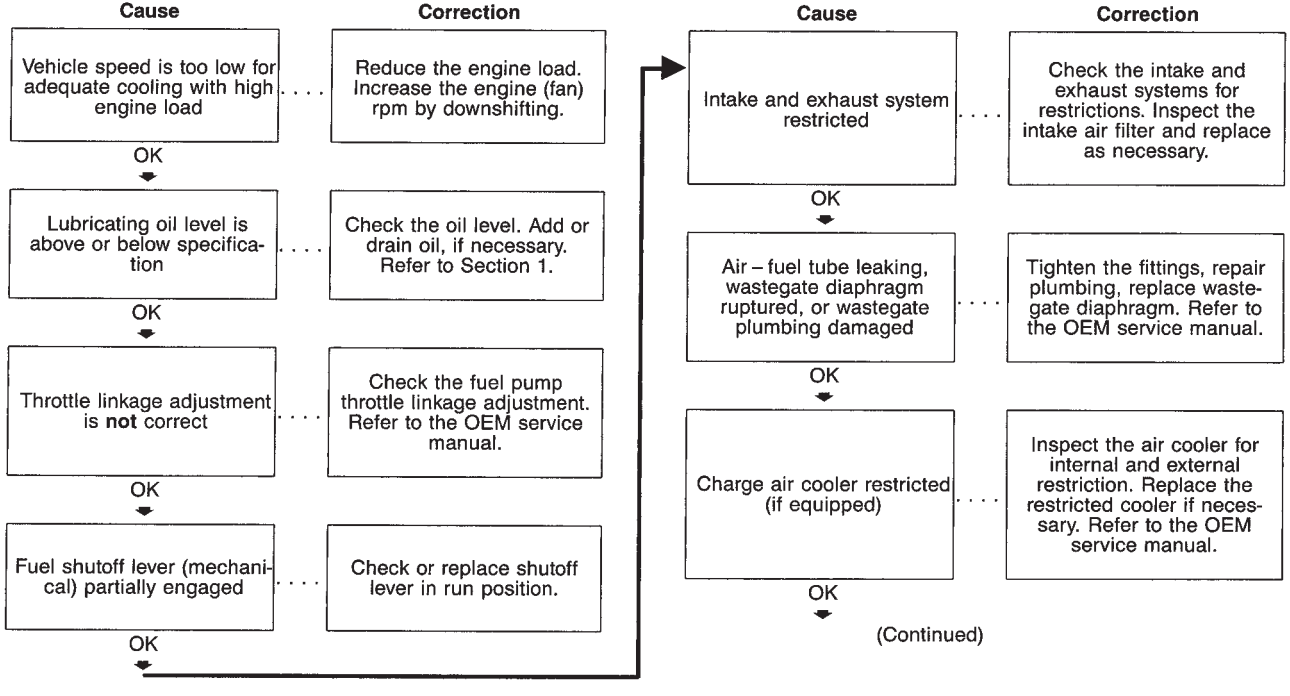

(Continued)

Engine Power Output Low (Continued)

Cause	Correction
Air leak between the turbocharger and the intake manifold	Check for leaks in the air crossover tube, charge air cooler connections, hoses, or through holes in the manifold cover and repair or replace if necessary. Refer to the OEM service manual.
OK	
Exhaust leaks at the manifold or turbocharger	Check and correct any leaks in the exhaust manifold or turbocharger gaskets. Check for a cracked exhaust manifold. Refer to the OEM service manual.
OK	
Air in the fuel system	Check for air in the fuel system. Completely bleed air from the fuel system. Refer to the OEM service manual.
OK	
Fuel quality is poor	Operate the engine from a temporary tank of No. 2 diesel fuel. Refer to Section V.
OK	
Fuel supply is **not** adequate	Check the flow through the filter to locate the source of the restriction. Refer to Section 5.
OK	
Fuel return restriction excessive	Inspect the fuel return lines for restrictions. Refer to the OEM service manual.
OK	
Fuel pump overflow valve is malfunctioning	Check the overflow valve. Replace if necessary. Refer to the OEM service manual.
OK	

(Continued)

Engine Power Output Low (Continued)

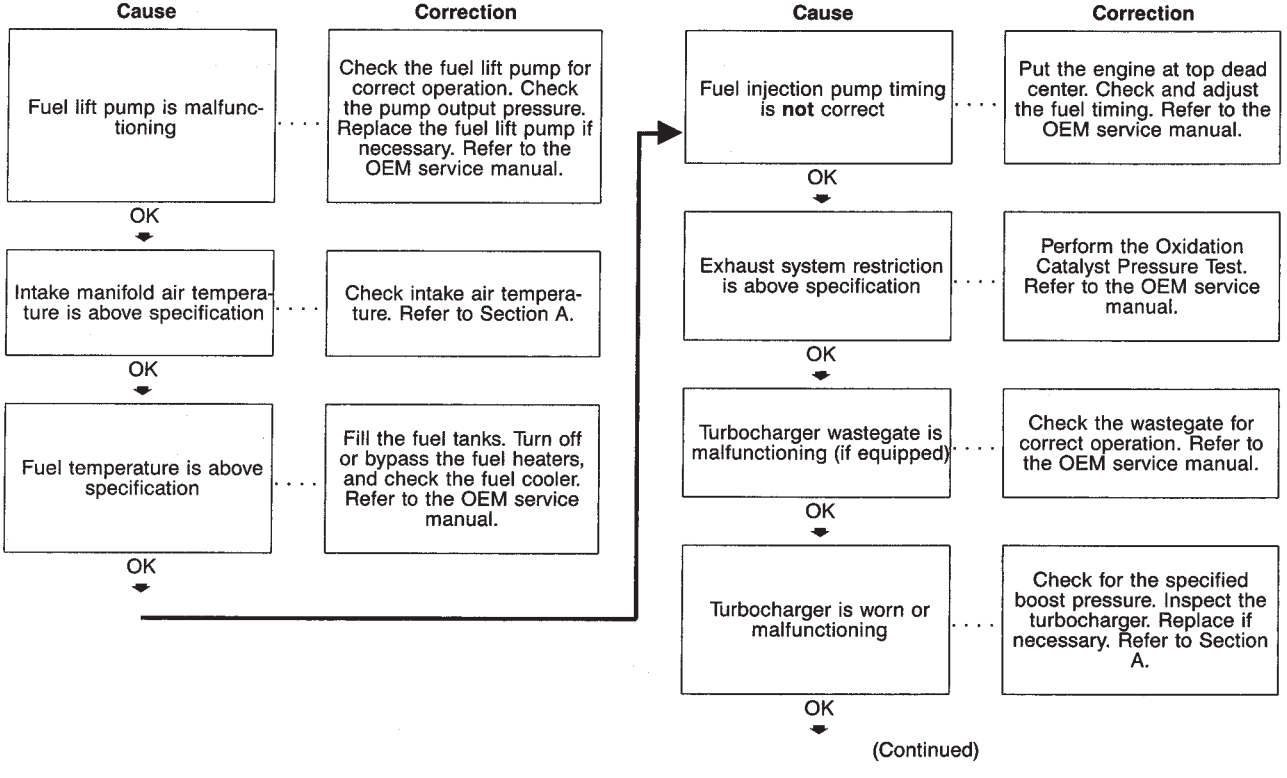

(Continued)

Engine Power Output Low (Continued)

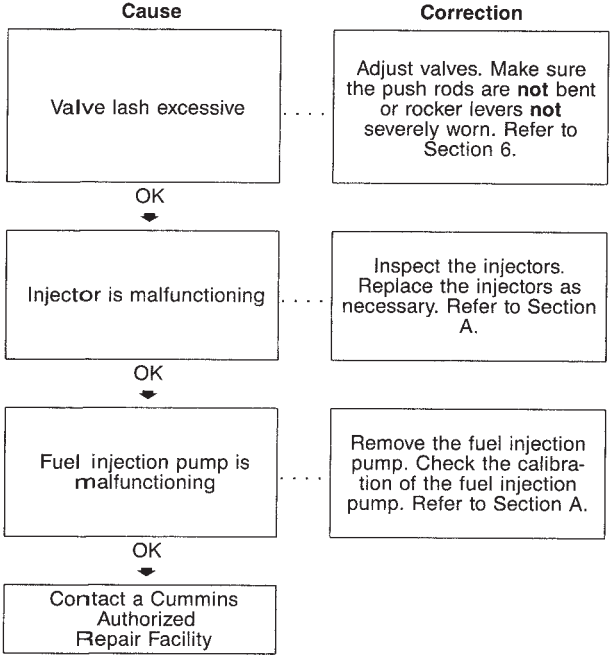

Engine Runs Rough at Idle, Warm Engine

Cause	Correction
Idle speed is set too low for accessories	Check and adjust the low idle screw. Refer to Section A.
OK	
Air in the fuel system	Bleed the fuel system and check for leaks. Refer to Section 5.
OK	
Fuel pump overflow valve is malfunctioning	Check the overflow valve. Replace if necessary. Refer to the OEM service manual.
OK	
Fuel transfer pump malfunctioning	Inspect the fuel transfer pump. Replace if necessary. Refer to Section A.
OK	
Fuel injection pump timing is incorrect	Check and adjust the injection pump timing. Refer to Section A.
OK	
Injector is malfunctioning	Inspect the injectors. Replace the injectors as necessary. Refer to Section A.
OK	
Engine mounts are worn, damaged, or **not** correct	Check the engine mounts. Refer to the OEM service manual.
OK	

(Continued)

Engine Runs Rough at Idle, Warm Engine (Continued)

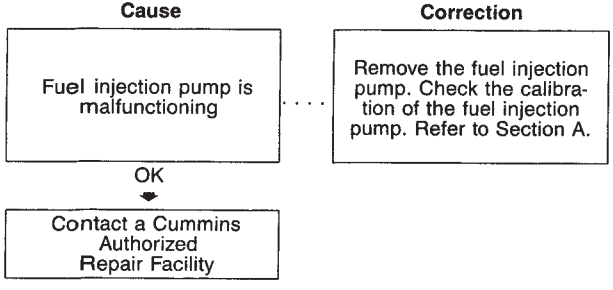

Engine Runs Rough or Misfires

Cause	Correction
Fuel contaminated	Verify by operating the engine with clean fuel from a temporary tank.
OK	
Air in the fuel system	Bleed the fuel system and check for leaks. Refer to Section 5.
OK	
Fuel leak	Check the fuel lines, fuel connections, and fuel filters for leaks. Refer to Section A.
OK	
Fuel pump overflow valve is malfunctioning	Check the overflow valve. Replace if necessary. Refer to the OEM sevice manual.
OK	
Fuel lift pump is malfunctioning	Check the fuel lift pump for correct operation. Check the pump output pressure. Replace the fuel lift pump if necessary. Refer to Section A.
OK	
Valve lash excessive	Adjust valves. Make sure the push rods are **not** bent or rocker levers **not** severely worn. Refer to Section 6.
OK	
Injector is malfunctioning	Inspect the injectors. Replace the injectors as necessary. Refer to Section A.
OK	

(Continued)

Engine Runs Rough or Misfires (Continued)

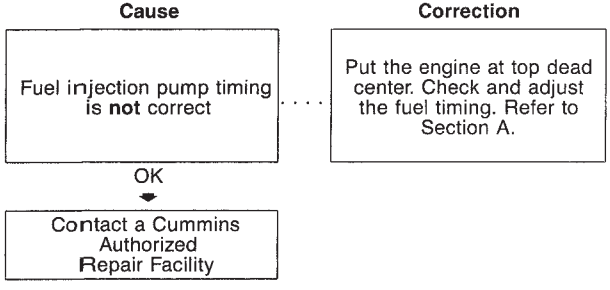

Engine Speed Surges at Low or High Idle

Cause	Correction
Fuel level is low in the tank	Fill the supply tank. Refer to the OEM service manual.
OK	
Engine idle speed is set too low	Adjust the idle speed. Refer to Section A.
OK	
Air in the fuel system	Bleed the fuel system and check for leaks. Refer to Section 5.
OK	
Fuel supply line or passage restriction between the fuel pump and the injectors	Check the fuel supply line or passage for sharp bends or restriction.
OK	
Injector is malfunctioning	Replace the malfunctioning injector. Refer to Section A.
OK	
Fuel injection pump is malfunctioning	Remove the fuel pump. Refer to Section A. Calibrate the fuel pump.
OK	
Contact a Cummins Authorized Repair Facility	

Engine Starts But Will Not Keep Running

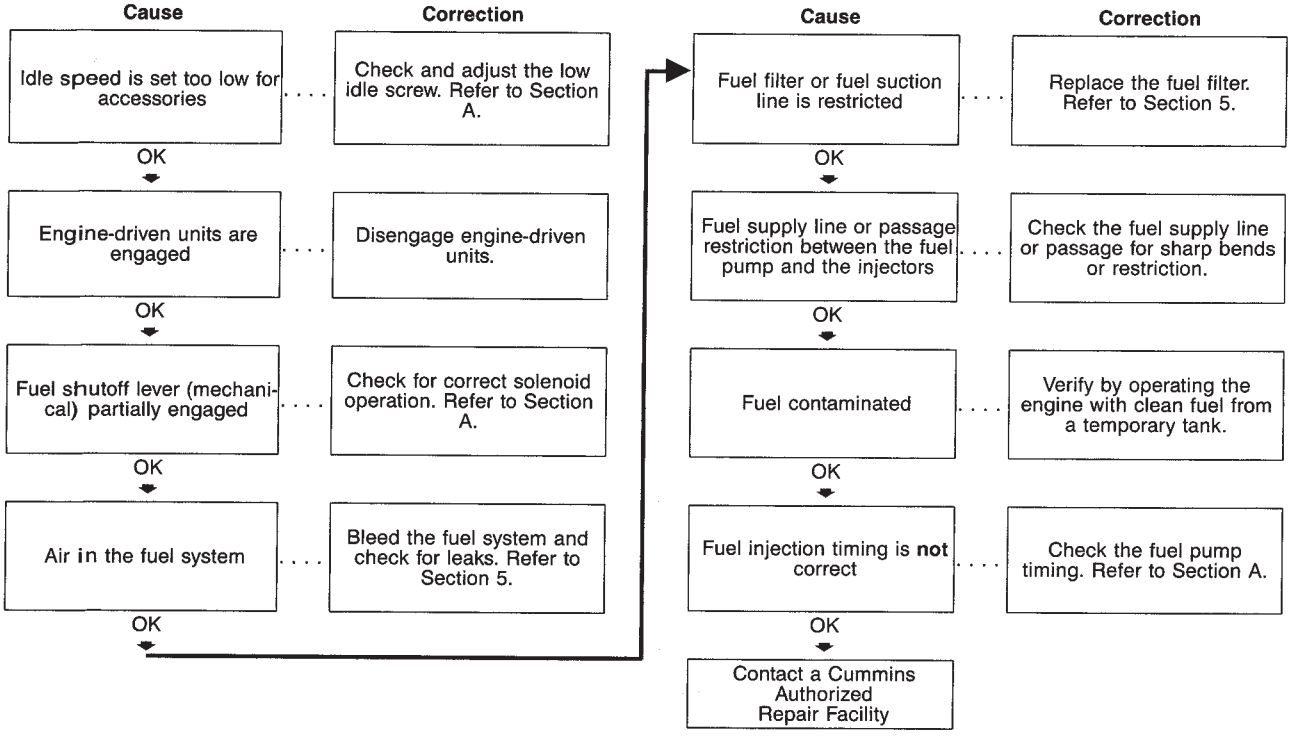

Engine Vibration Excessive

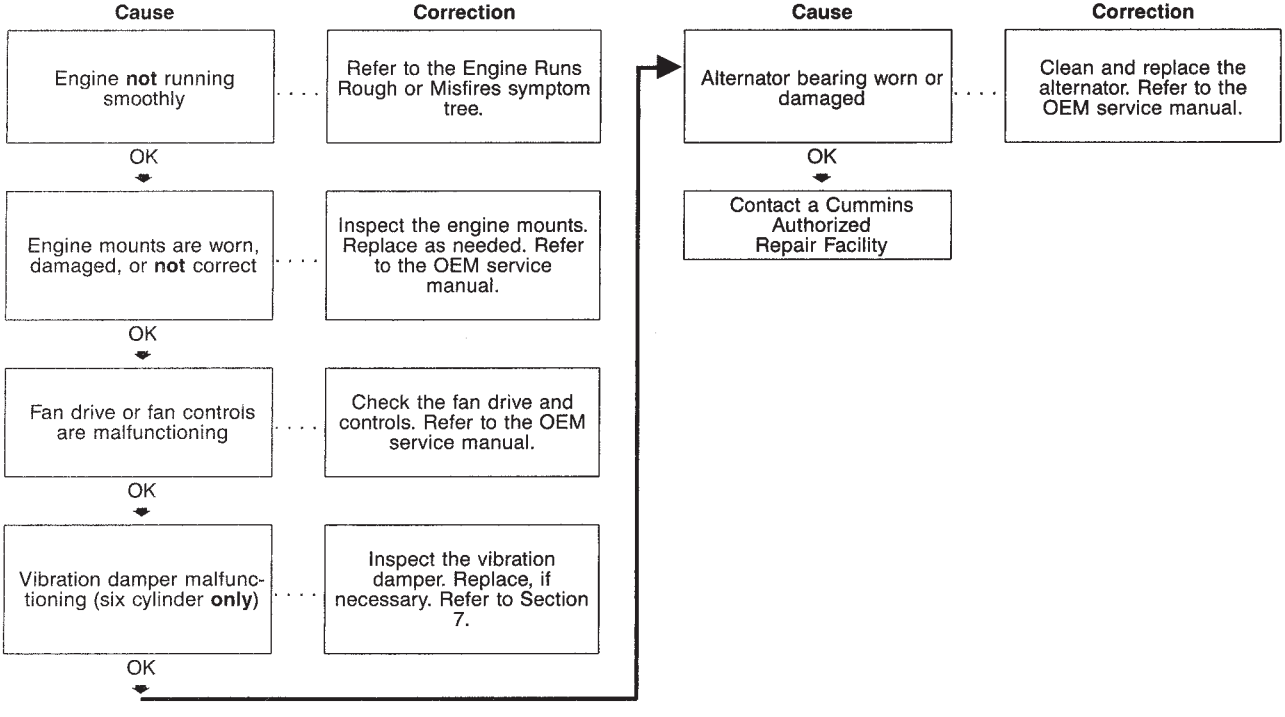

Engine Will Not Crank or Cranks Slowly

Cause	Correction
Engine-driven units are engaged	Disengage engine-driven units.
OK	
Crankshaft rotation is impaired	Check crankshaft for ease of rotation. Refer to Section 6.
OK	
Electrical system is "open" (blown fuses, broken wires, or loose connections)	Check the fuses, wires, and connections. Refer to the OEM service manual and Manufacturer's wiring diagram.
OK	
Battery charge is low	Check battery. If the battery is low, check the alternator for proper charging. Charge the battery, and replace if necessary. Refer to the OEM service manual.
OK	

Cause	Correction
Starter solenoid is **not** receiving voltage	Check the battery supply to the starter solenoid. Refer to the OEM service manual.
OK	
Starting circuit component is malfunctioning	Check the starting circuit components. Refer to the OEM service manual.
OK	
Starting motor operating but **not** cranking the engine	Remove the starting motor and inspect for broken teeth on the ring gear and pinion. Inspect for a broken starting motor spring.
OK	
Contact a Cummins Authorized Repair Facility	

Engine Will Not Reach Rated Speed (RPM)

Cause	Correction
Vehicle speed is too low for adequate cooling with high engine load	Reduce the engine load. Increase the engine (fan) rpm by downshifting.
OK	
Throttle linkage adjustment is **not** correct	Check throttle linkage adjustment. Refer to the OEM service manual.
OK	
Tachometer is **not** calibrated or is malfunctioning	Compare the tachometer reading with a handheld tachometer or an electronic service tool reading. Calibrate or replace the tachometer as necessary. Refer to the OEM service manual.
OK	

Cause	Correction
Air – fuel tube leaking, wastegate diaphragm ruptured, or wastegate plumbing damaged	Tighten the fittings, repair plumbing, replace wastegate diaphragm. Refer to the OEM service manual.
OK	
Charge air cooler restricted (if equipped)	Inspect the air cooler for internal and external restriction. Replace the restricted cooler if necessary. Refer to Section A.
OK	
Fuel supply is **not** adequate	Check the flow through the filter to locate the source of the restriction. Refer to Section 5.
OK	
High-speed screw is **not** adjusted correctly	Loosen the locknut, and adjust the high-speed (top-0) screw. Refer to Section A.
OK	

(Continued)

Engine Will Not Reach Rated Speed (RPM) (Continued)

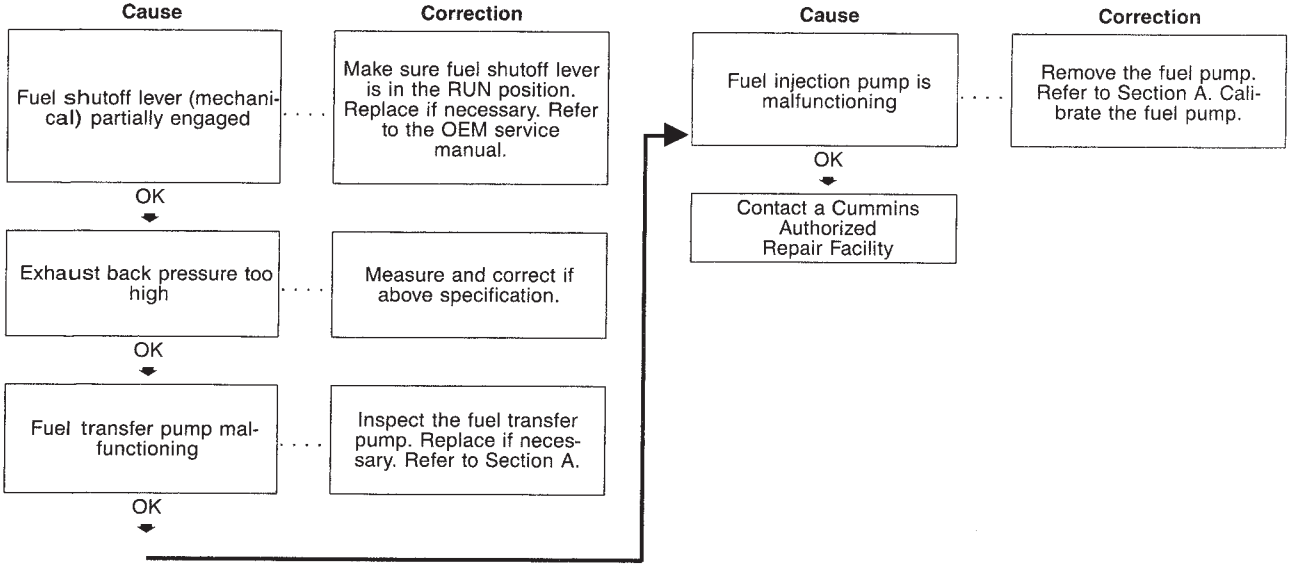

Engine Will Not Shut Off

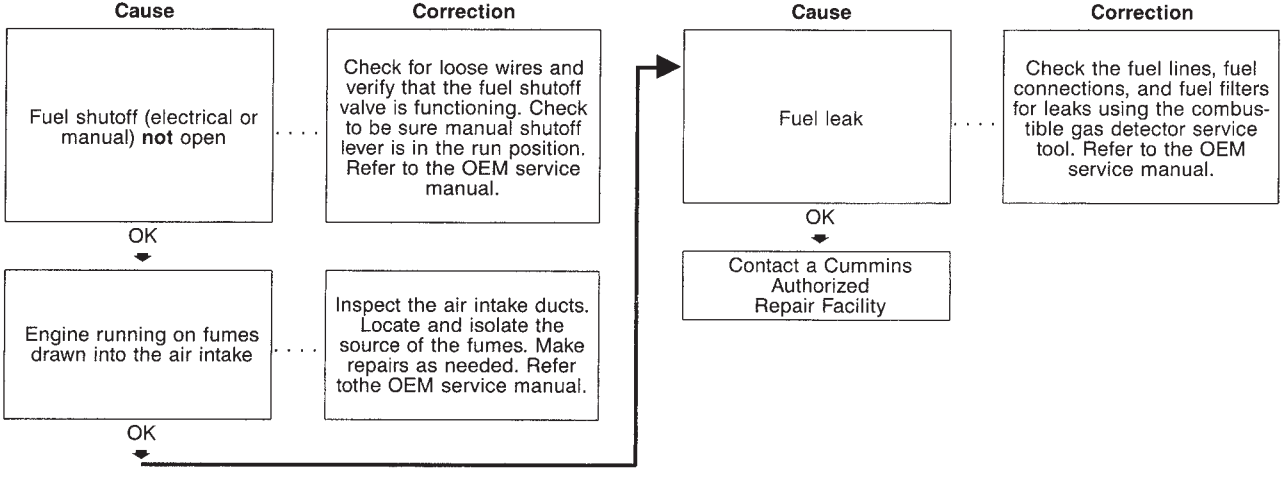

Exhaust Smoke Excessive Under Load

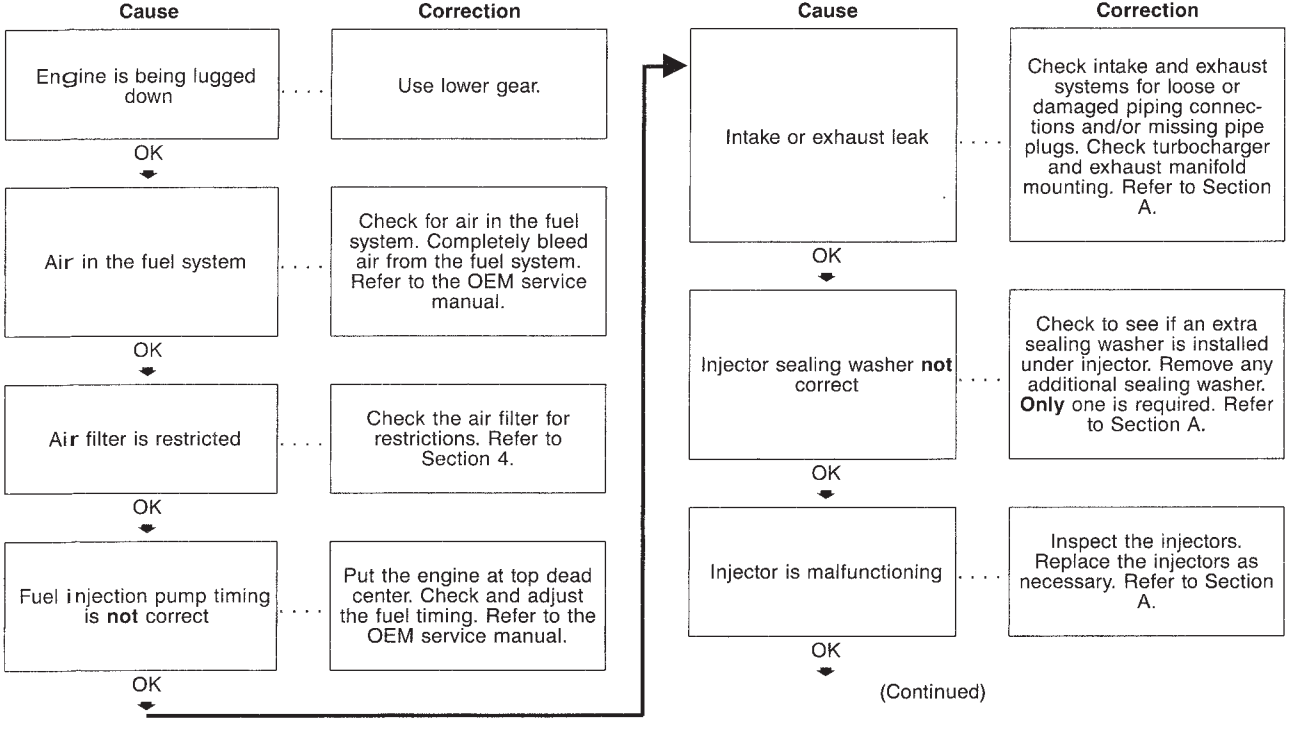

(Continued)

Exhaust Smoke Excessive Under Load (Continued)

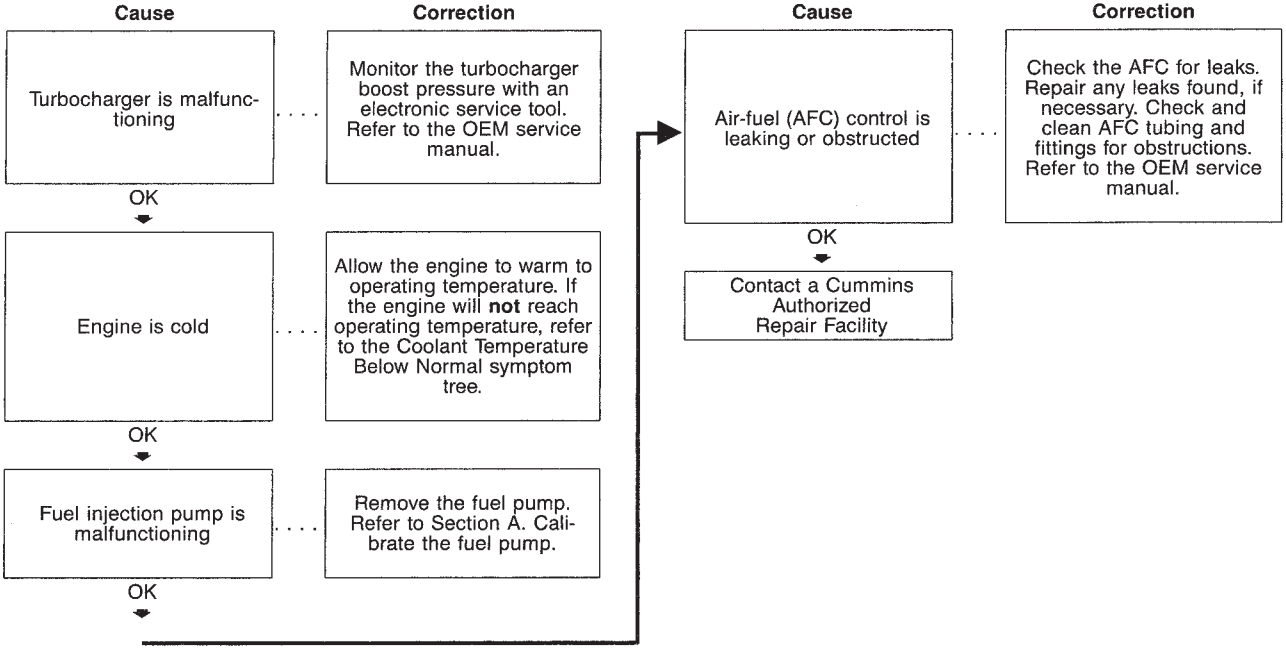

Fuel Knock

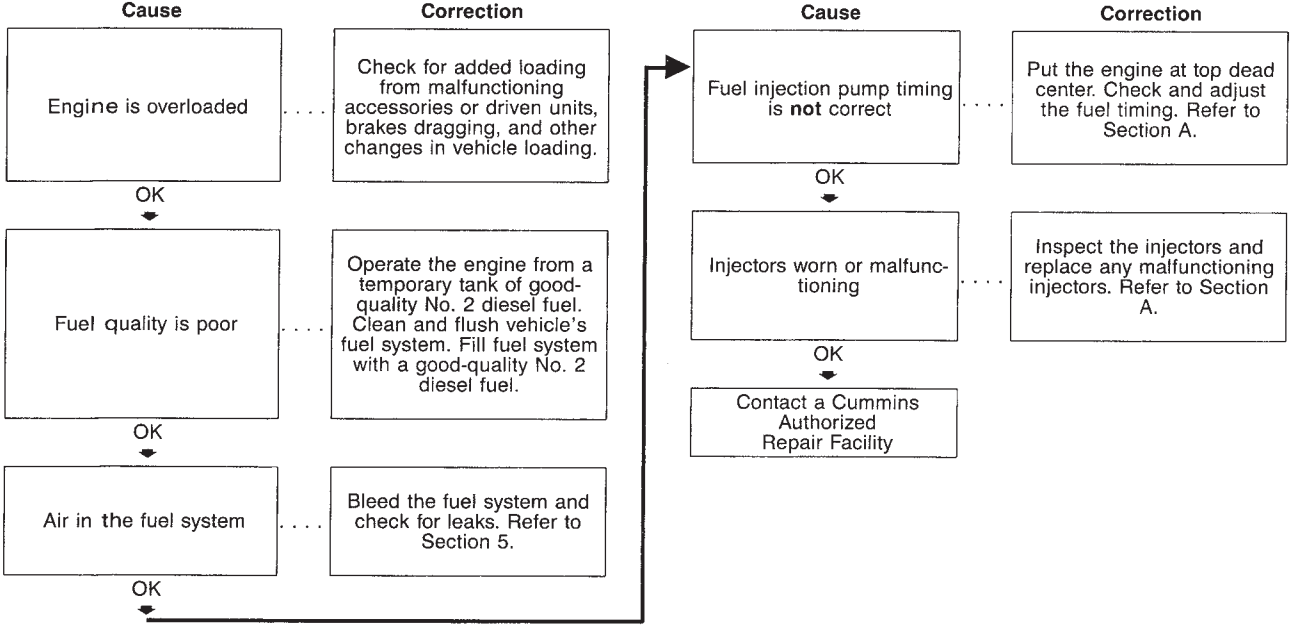
Cause
Correction
Engine is overloaded
Check for added loading from malfunctioning accessories or driven units, brakes dragging, and other changes in vehicle loading.
OK
Fuel quality is poor
Operate the engine from a temporary tank of good-quality No. 2 diesel fuel. Clean and flush vehicle's fuel system. Fill fuel system with a good-quality No. 2 diesel fuel.
OK
Air in the fuel system
Bleed the fuel system and check for leaks. Refer to Section 5.
OK
Cause
Correction
Fuel injection pump timing is not correct
Put the engine at top dead center. Check and adjust the fuel timing. Refer to Section A.
OK
Injectors worn or malfunctioning
Inspect the injectors and replace any malfunctioning injectors. Refer to Section A.
OK
Contact a Cummins Authorized Repair Facility

Fuel or Lubricating Oil Leaking From Exhaust Manifold

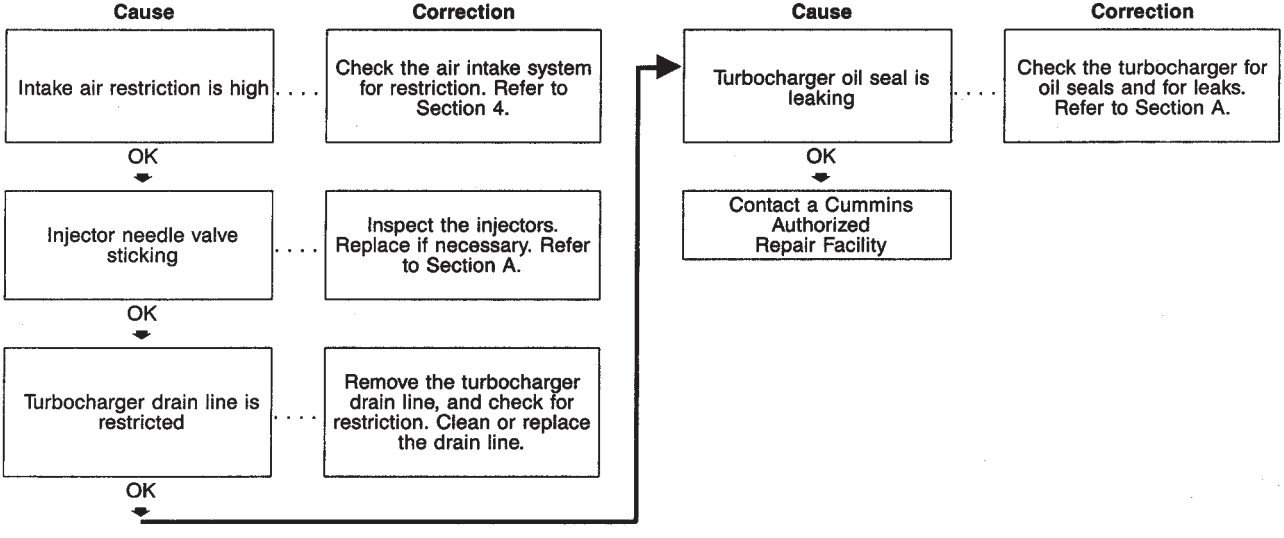

Lubricating Oil Contaminated

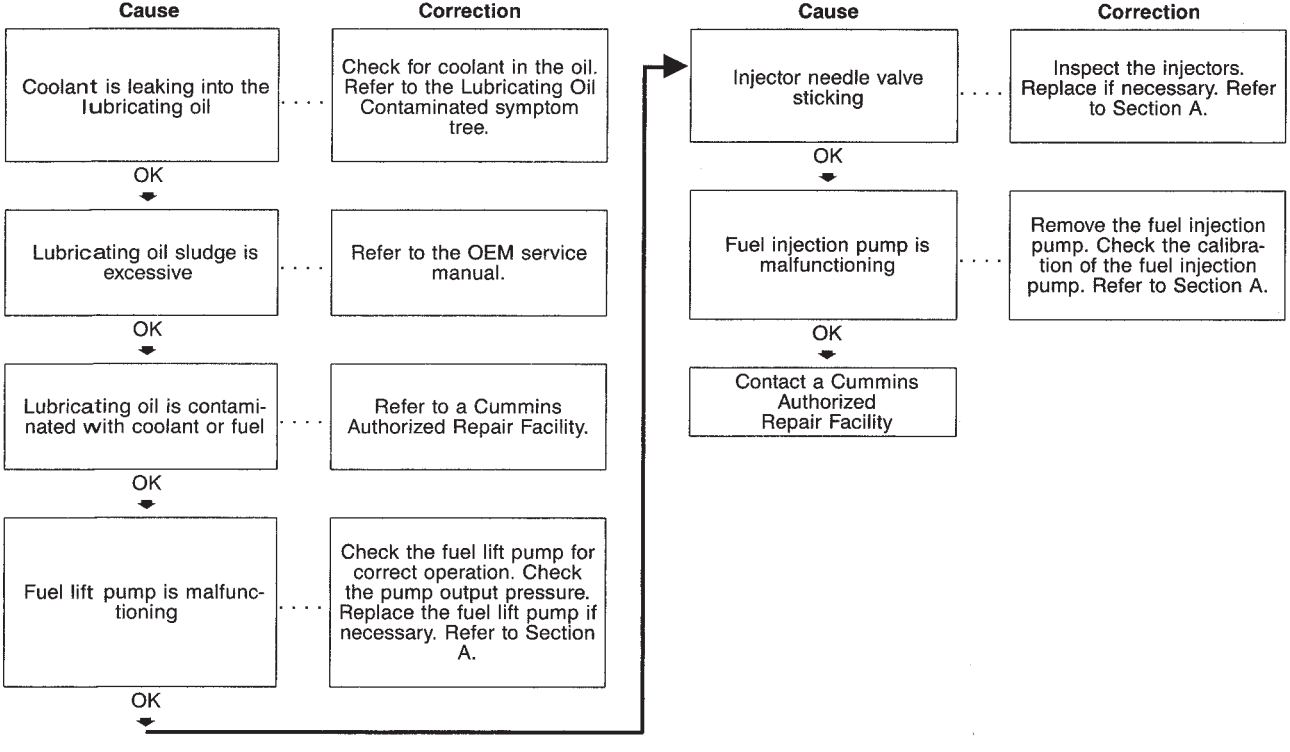

Lubricating Oil Loss

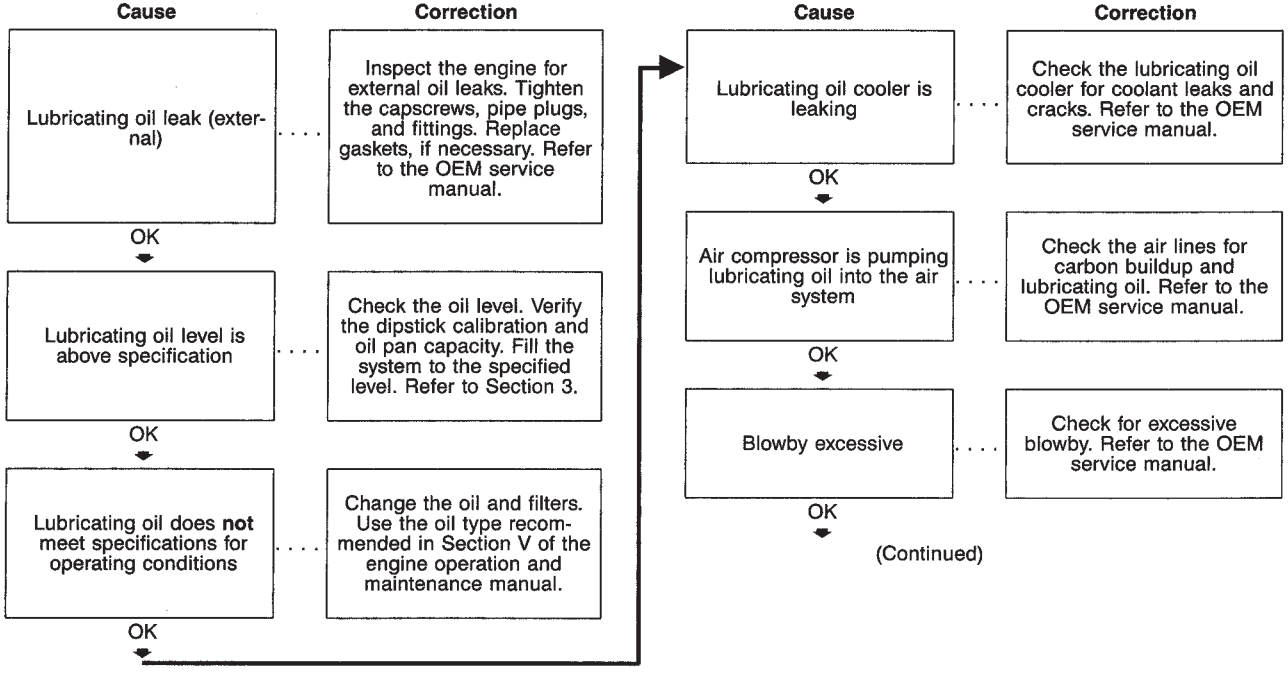

(Continued)

Lubricating Oil Loss (Continued)

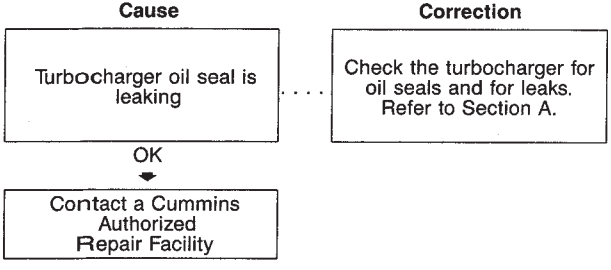

Lubricating Oil Pressure High

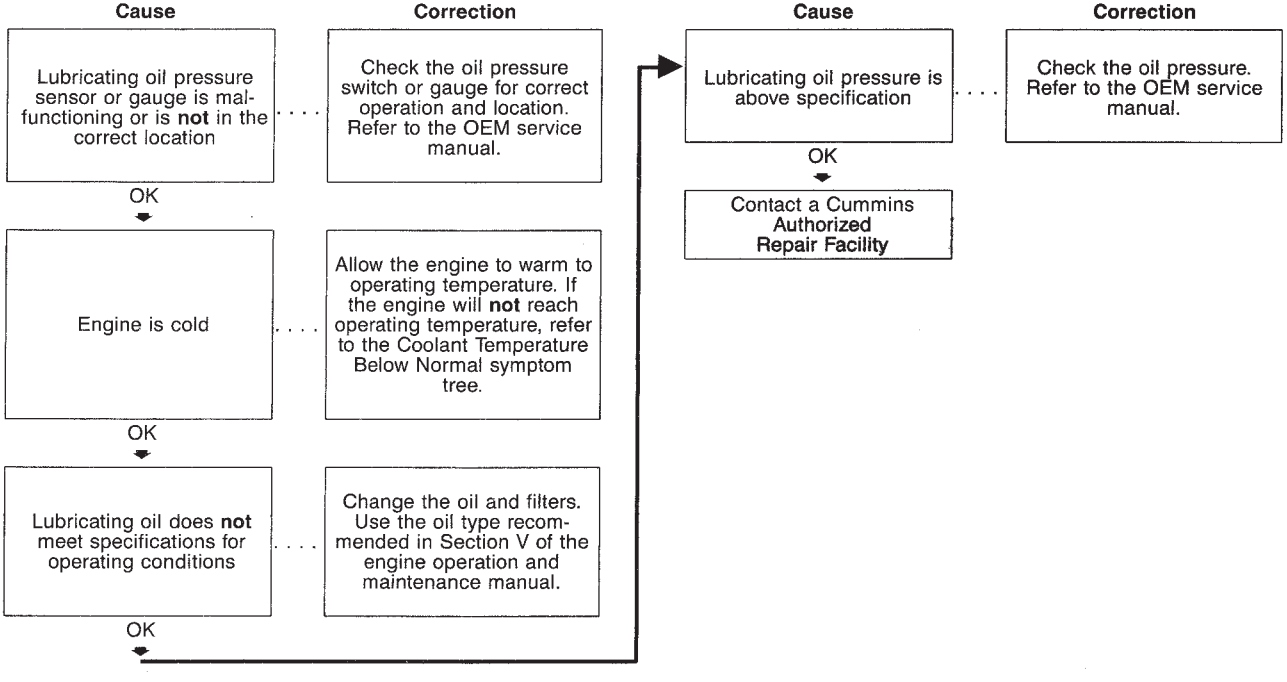

Lubricating Oil Pressure Low

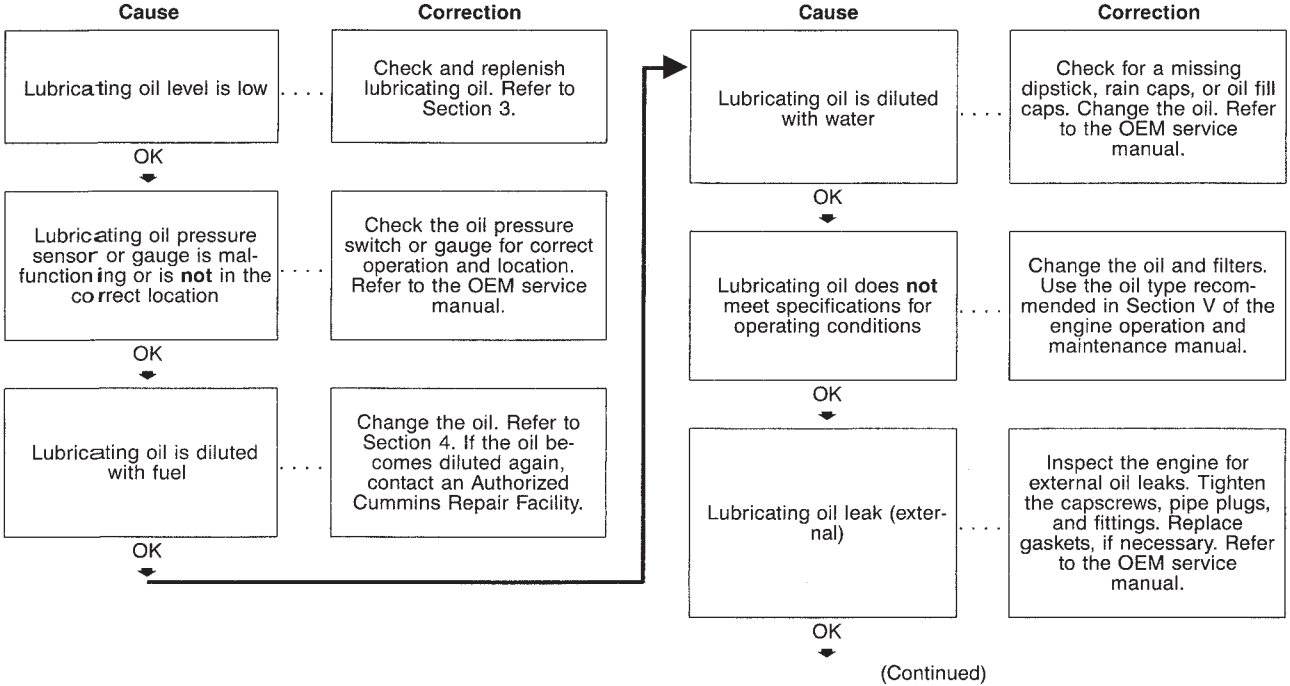

(Continued)

Lubricating Oil Pressure Low (Continued)

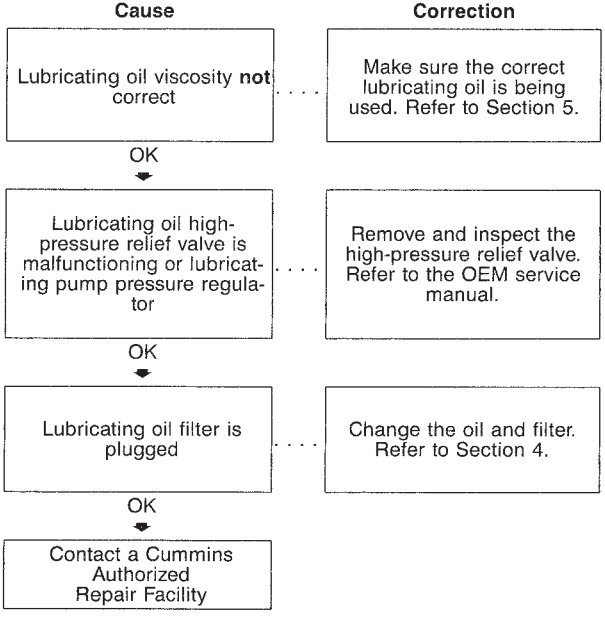

Smoke, White — Excessive

Cause	Correction
Starting procedure is **not** correct	Verify the correct starting procedure. Refer to Section 1.
OK	
Coolant temperature is below specification	Refer to the OEM service manual.
OK	
Intake manifold air temperature is below specification	Refer to the OEM service manual.
OK	
Fuel rate is low, fuel pressure is low, intake manifold pressure is low	Check the fuel pump output pressure, pulsation damper, and pressure regulator. Replace the fuel pump if necessary.
OK	
Injection timing incorrect	Check injection timing. Refer to Section A.
OK	
Fuel pump return overflow valve is malfunctioning	Inspect the return overflow valve. Replace if necessary. Refer to the OEM service manual.
OK	
Temperature switch failed	With the key system on, short out the harness at the temperature switch. If it engages, troubleshoot the sensor or check for air in the coolant system. Remove the sensor and make sure at ambient conditions the sensor is open; and at the correct temperature, 91°C [193°F], make sure the sensor closes. Replace if necessary.
OK	

(Continued)

Smoke, White — Excessive (Continued)

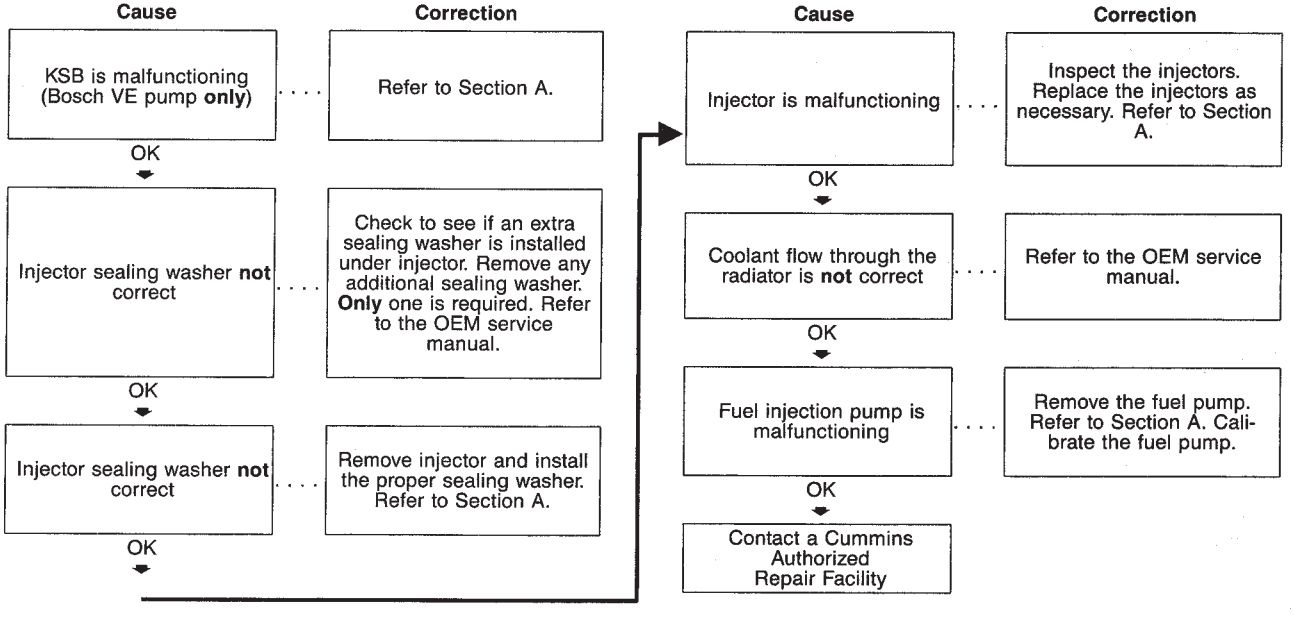

NOTES

Section V - Maintenance Specifications

Section Contents

	Page
Arctic Operation	V-27
Preparatory	V-27
Capscrew Markings and Torque Values	V-32
Capscrew Markings and Torque Values - Metric	V-33
Capscrew Markings and Torque Values - U.S. Customary	V-34
General Information	V-32
Coolant Recommendations and Specifications	V-28
Preparatory	V-28
Engine Component Torque Values	V-29
General Information	V-29
Fuel Recommendations and Specifications	V-20
Fuel Recommendations	V-20
Lubricating Oil Recommendations and Specifications	V-25
New Engine Break-in Oils	V-25
Sealants	V-24
General Information	V-24
Specifications	V-1
Air Intake System	V-10
Cooling System	V-8
Electrical System	V-17
Exhaust System	V-12
Fuel System	V-14

Page

General Specifications V-1
Lubricating Oil System V-5

Specifications

General Specifications

General 4B Engine Data (nonautomotive)

	4B3.9	4BT3.9	4BTA3.9
Bore	102 mm [4.02 in]	102 mm [4.02 in]	102 mm [4.02 in]
Stroke	120 mm [4.72 in]	120 mm [4.72 in]	120 mm [4.72 in]
Displacement	3.9 liters [238 in^3]	3.9 liters [238 in^3]	3.9 liters [238 in^3]
Engine Weight (dry) Less Flywheel and Electric Components	308 kg [679 lb]	320 kg [705 lb]	329 kg [725 lb]
Firing Order	1, 3, 4, 2	1, 3, 4, 2	1, 3, 4, 2
Valve Clearances:			
- Intake	0.25 mm [0.010 in]	0.25 mm [0.010 in]	0.25 mm [0.010 in]
- Exhaust	0.51 mm [0.020 in]	0.51 mm [0.020 in]	0.51 mm [0.020 in]
Compression Ratio	18.5:1	17.5:1	16.5:1
Rotation, Viewed from the Front of the Engine	**Clockwise**	**Clockwise**	**Clockwise**
Aspiration:			
- Naturally Aspirated	X		

	4B3.9	4BT3.9	4BTA3.9
- Turbocharged		X	X
- Aftercooled			X

General 6B Engine Data (nonautomotive)

	6B5.9	6BT5.9	6BTA5.9
Bore	102 mm [4.02 in]	102 mm [4.02 in]	102 mm [4.02 in]
Stroke	120 mm [4.72 in]	120 mm [4.72 in]	120 mm [4.72 in]
Displacement	5.88 liters [359 in^3]	5.88 liters [359 in^3]	5.88 liters [359 in^3]
Engine Weight (dry) Less Flywheel and Electric Components	388 kg [855 lb]	399 kg [880 lb]	411 kg [906 lb]
Firing Order	1, 5, 3, 6, 2, 4	1, 5, 3, 6, 2, 4	1, 5, 3, 6, 2, 4
Valve Clearances:			
- Intake	0.25 mm [0.010 in]	0.25 mm [0.010 in]	0.25 mm [0.010 in]
- Exhaust	0.51 mm [0.020 in]	0.51 mm [0.020 in]	0.51 mm [0.020 in]
Compression Ratio	18.5:1	17.5:1	16.5:1
Rotation, Viewed from the Front of the Engine	**Clockwise**	**Clockwise**	**Clockwise**
Aspiration:			
- Naturally Aspirated	X		
- Turbocharged		X	X
- Aftercooled			X

General Engine Data (automotive)

	B3.9	B5.9
Bore	102 mm [4.02 in]	102 mm [4.02 in]
Stroke	120 mm [4.72 in]	120 mm [4.72 in]
Displacement	3.9 liters [238 in^3]	5.9 liters [360 in^3]
Engine Weight (dry) Less Flywheel and Electric Components	308 to 329 kg [679 to 725 lb]	388 to 411 kg [855 to 906 lb]
Firing Order	1, 3, 4, 2	1, 5, 3, 6, 2, 4
Valve Clearances:		
-Intake	0.25 mm [0.010 in]	0.25 mm [0.010 in]
-Exhaust	0.51 mm [0.020 in]	0.51 mm [0.020 in]
Compression Ratio	(rotary pump) 17.6:1	(in-line pump) 17.9:1
Rotation, Viewed from the Front of the Engine	**Clockwise**	**Clockwise**
Aspiration:		
- Turbocharged	X	X
- Charge-Air Cooled	X	X

Lubricating Oil System

4B Lubrication System Data (nonautomotive)

	4B3.9	4BT3.9	4BTA3.9
Lubricating Oil Pressure at Idle - (minimum allowable)	69 kPa [10 psi]	69 kPa [10 psi]	69 kPa [10 psi]
Lubricating Oil Pressure at Rated - (minimum allowable)	207 kPa [30 psi]	207 kPa [30 psi]	207 kPa [30 psi]
Regulating Valve Opening Pressure	449 kPa [65 psi]	449 kPa [65 psi]	449 kPa [65 psi]
Lubricating Oil Capacity: Standard Pan **Only**	9.5 liters [10 qt]	9.5 liters [10 qt]	9.5 liters [10 qt]
Total System	10.9 liters [11.5 qt]	11 liters [11.6 qt]	11 liters [11.6 qt]
Low to High	0.9 liter [1 qt]	0.9 liter [1 qt]	0.9 liter [1 qt]

6B Lubrication System Data (nonautomotive)

	6B5.9	6BT5.9	6BTA5.9
Lubricating Oil Pressure at Idle - (minimum allowable)	69 kPa [10 psi]	69 kPa [10 psi]	69 kPa [10 psi]
Lubricating Oil Pressure at Rated - (minimum allowable)	207 kPa [30 psi]	207 kPa [30 psi]	207 kPa [30 psi]
Regulating Valve Opening Pressure	449 kPa [65 psi]	449 kPa [65 psi]	449 kPa [65 psi]
Lubricating Oil Capacity: Standard Pan **Only**	14.2 liters [15 qt]	14.2 liters [15 qt]	14.2 liters [15 qt]
Total System	16.3 liters [17.2 qt]	16.4 liters [17.3 qt]	16.4 liters [17.3 qt]
Low to High	1.9 liters [2 qt]	1.9 liters [2 qt]	1.9 liters [2 qt]

Lubrication System Data (automotive)

	B3.9	B5.9
Lubricating Oil Pressure at Idle - (minimum allowable)	69 kPa [10 psi]	69 kPa [10 psi]
Lubricating Oil Pressure at Rated - (minimum allowable)	207 kPa [30 psi]	207 kPa [30 psi]
Regulating Valve Opening Pressure	449 kPa [65 psi]	449 kPa [65 psi]
Lubricating Oil Capacity:		
Standard Pan **Only**	9.5 liters [10 qt]	14.2 liters [15 qt]
Total System - Liters [U.S. qt]	11 liters [11.6 qt]	16.4 liters [17.3 qt]
Low to High	0.9 liter [1 qt]	1.9 liters [2 qt]

Cooling System

4B Cooling System Data (nonautomotive)

	4B3.9	4BT3.9	4BTA3.9
Coolant Capacity (engine **only**)	7 liters [7.4 qt]	7 liters [7.4 qt]	9.7 liters [10.2 qt]
Standard Modulating Thermostat Range	Start 83°C [181°F]; Fully Open 95°C [203°F]	Start 83°C [181°F]; Fully Open 95°C [203°F]	Start 83°C [181°F]; Fully Open 95°C [203°F]
Pressure Cap:			
104°C [220°F] Systems	103 kPa [15 psi]	103 kPa [15 psi]	103 kPa [15 psi]
99°C [210°F] Systems	48 kPa [7 psi]	48 kPa [7 psi]	48 kPa [7 psi]

6B Cooling System Data (nonautomotive)

	6B5.9	6BT5.9	6BTA5.9
Coolant Capacity (engine **only**)	10.5 liters [11.1 qt]	10.5 liters [11.1 qt]	14.5 liters [15.3 qt]
Standard Modulating Thermostat Range	Start 83°C [181°F]; Fully Open 95°C [203°F]	Start 83°C [181°F]; Fully Open 95°C [203°F]	Start 83°C [181°F]; Fully Open 95°C [203°F]
Pressure Cap:			
104°C [220°F] Systems	103 kPa [15 psi]	103 kPa [15 psi]	103 kPa [15 psi]
99°C [210°F] Systems	48 kPa [7 psi]	48 kPa [7 psi]	48 kPa [7 psi]

Cooling System Data (automotive)

	B3.9	B5.9
Coolant Capacity (engine **only**)	7 liters [7.4 qt]	10.5 liters [11.1 qt]
Standard Modulating Thermostat Range	Start 83°C [181°F]	Fully Open 95°C [203°F]
Pressure Cap:		
104°C [220°F] Systems	103 kPa [15 psi]	103 kPa [15 psi]
99°C [210°F] Systems	48 kPa [7 psi]	48 kPa [7 psi]

Air Intake System

4B Air Intake System (nonautomotive)

	4B3.9	4BT3.9	4BTA3.9
Maximum Allowable Intake Restriction at Rated Speed and Loaded with Dirty Air Filter Element	508 mm H_2O [20 in H_2O]	635 mm H_2O [25 in H_2O]	635 mm H_2O [25 in H_2O]

6B Air Intake System (nonautomotive)

	6B5.9	6BT5.9	6BTA5.9
Maximum Allowable Intake Restriction at Rated Speed and Loaded with Dirty Air Filter Element	508 mm H_2O [20 in H_2O]	635 mm H_2O [25 in H_2O]	635 mm H_2O [25 in H_2O]

Air Intake System Data (automotive)

	B3.9	B5.9
Maximum Allowable Intake Restriction at Rated Speed and Loaded with Dirty Air Filter Element	635 mm H_2O [25 in H_2O]	635 mm H_2O [25 in H_2O]

Exhaust System

4B Exhaust System Data (nonautomotive)

	4B3.9	4BT3.9	4BTA3.9
Maximum Allowable Exhaust Restriction at Rated Speed and Loaded	76.2 mm Hg [3.0 in Hg]	76.2 mm Hg [3.0 in Hg]	76.2 mm Hg [3.0 in Hg]

6B Exhaust System Data (nonautomotive)

	6B5.9	6BT5.9	6BTA5.9
Maximum Allowable Exhaust Restriction at Rated Speed and Loaded	76.2 mm Hg [3.0 in Hg]	76.2 mm Hg [3.0 in Hg]	76.2 mm Hg [3.0 in Hg]

Exhaust System Data (automotive)

	B3.9	B5.9
Maximum Allowable Exhaust Restriction at Rated Speed and Loaded (1991 to 1993 EPA certified)	114.3 mm Hg [4.5 in Hg]	114.3 mm Hg [4.5 in Hg]
Maximum Allowable Exhaust Restriction at Rated Speed and Loaded (1994 to 1998 EPA certified)	152.4 mm Hg [6 in Hg] with oxidation catalyst	152.4 mm Hg [6 in Hg] with oxidation catalyst

Fuel System

4B Fuel System Data (nonautomotive)

Distributor-Type Fuel Injection Pumps	4B3.9	4BT3.9	4BTA3.9
Maximum Allowable Restriction to the Fuel Transfer Pump **Must Not** Exceed	100 mm Hg [4 in Hg]	100 mm Hg [4 in Hg]	100 mm Hg [4 in Hg]
Maximum Allowable Return Line Restriction	518 mm Hg [20.4 in Hg]	518 mm Hg [20.4 in Hg]	518 mm Hg [20.4 in Hg]
Maximum Allowable Pressure Drop across Fuel Filter	35 kPa [5 psi]	35 kPa [5 psi]	35 kPa [5 psi]
Maximum Inlet Pressure to the Injection Pump **Must Not** Exceed	70 kPa [10 psi]	70 kPa [10 psi]	70 kPa [10 psi]
In-Line-Type Fuel Injection Pumps			
Maximum Inlet Restriction to the Fuel Transfer Pump **Must Not** Exceed	100 mm Hg [4 in Hg]	100 mm Hg [4 in Hg]	100 mm Hg [4 in Hg]
Fuel Transfer Pump Minimum Output Pressure	172 kPa [25 psi] High Flow and 90 kPa [13 psi] Low Flow @ Rated rpm	172 kPa [25 psi] High Flow and 90 kPa [13 psi] Low Flow @ Rated rpm	172 kPa [25 psi] High Flow and 90 kPa [13 psi] Low Flow @ Rated rpm
Fuel Filter Restriction (maximum pressure drop across filters)	35 kPa [5 psi]	35 kPa [5 psi]	35 kPa [5 psi]
Fuel Pump Gallery Pressure	* 140 kPa [20 psi] @ Rated rpm	* 140 kPa [20 psi] @ Rated rpm	* 140 kPa [20 psi] @ Rated rpm
Fuel Return Maximum Restriction	518 mm Hg [20.4 in Hg]	518 mm Hg [20.4 in Hg]	518 mm Hg [20.4 in Hg]

* The low-flow fuel transfer pump will have 82.7 kPa [12 psi].

6B Fuel System Data (nonautomotive)

Distributor-Type Fuel Injection Pumps	6B5.9	6BT5.9	6BTA5.9
Maximum Allowable Restriction to the Fuel Transfer Pump **Must Not** Exceed	100 mm Hg [4 in Hg]	100 mm Hg [4 in Hg]	100 mm Hg [4 in Hg]
Maximum Allowable Return Line Restriction	518 mm Hg [20.4 in Hg]	518 mm Hg [20.4 in Hg]	518 mm Hg [20.4 in Hg]
Maximum Allowable Pressure Drop across Fuel Filter	35 kPa [5 psi]	35 kPa [5 psi]	35 kPa [5 psi]
Maximum Inlet Pressure to the Injection Pump **Must Not** Exceed	70 kPa [10 psi]	70 kPa [10 psi]	70 kPa [10 psi]
In-Line-Type Fuel Injection Pumps			
Maximum Inlet Restriction to the Fuel Transfer Pump **Must Not** Exceed	100 mm Hg [4 in Hg]	100 mm Hg [4 in Hg]	100 mm Hg [4 in Hg]
Fuel Transfer Pump Minimum Output Pressure	172 kPa [25 psi] High Flow and 90 kPa [13 psi] Low Flow @ Rated rpm	172 kPa [25 psi] High Flow and 90 kPa [13 psi] Low Flow @ Rated rpm	172 kPa [25 psi] High Flow and 90 kPa [13 psi] Low Flow @ Rated rpm
Fuel Filter Restriction (maximum pressure drop across filters)	35 kPa [5 psi]	35 kPa [5 psi]	35 kPa [5 psi]
Fuel Pump Gallery Pressure	* 140 kPa [20 psi] @ Rated rpm	* 140 kPa [20 psi] @ Rated rpm	* 140 kPa [20 psi] @ Rated rpm
Fuel Return Maximum Restriction	518 mm Hg [20.4 in Hg]	518 mm Hg [20.4 in Hg]	518 mm Hg [20.4 in Hg]

* The low-flow fuel transfer pump will have 82.7 kPa [12 psi].

Fuel System Data (automotive)

Distributor-Type Fuel Injection Pumps	B3.9	B5.9
Maximum Inlet Restriction to the Fuel Transfer Pump **Must Not** Exceed	100 mm Hg [4 in Hg]	100 mm Hg [4 in Hg]
Maximum Allowable Return Line Restriction	518 mm Hg [20.4 in Hg]	518 mm Hg [20.4 in Hg]
Maximum Allowable Pressure Drop across Fuel Filter	35 kPa [5 psi]	35 kPa [5 psi]
Maximum Inlet Pressure to the Injection Pump **Must Not** Exceed	70 kPa [10 psi]	70 kPa [10 psi]

In-Line-Type Fuel Injection Pumps	B3.9	B5.9
Maximum Inlet Restriction to the Fuel Transfer Pump **Must Not** Exceed	100 mm Hg [4 in Hg]	100 mm Hg [4 in Hg]
Fuel Transfer Pump Minimum Output Pressure	175 kPa [25 psi] @ Rated rpm	175 kPa [25 psi] @ Rated rpm
Fuel Filter Restriction (maximum pressure drop across filters)	35 kPa [5 psi]	35 kPa [5 psi]
Fuel Pressure Gallery Pressure	140 kPa [20 psi] @ Rated rpm	140 kPa [20 psi] @ Rated rpm
Fuel Return Maximum Restriction	518 mm Hg [20.4 in Hg]	518 mm Hg [20.4 in Hg]

Electrical System

4B Electrical System Data (nonautomotive)

	4B3.9	4BT3.9	4BTA3.9
Minimum Recommended Battery Capacity @ -18°C [0°F] With Light Accessories*			
12-VDC Starter	625CCA	625CCA	625CCA
24-VDC Starter	312CCA	400CCA	400CCA
With Heavy Accessories**			
12-VDC Starter	800CCA	800CCA	800CCA
24-VDC Starter	400CCA	400CCA	400CCA
Maximum Allowable Resistance of Starting Circuit			
With 12-VDC Starter - Ohms	0.0012	0.0012	0.0012
With 24-VDC Starter - Ohms	0.0020	0.0020	0.0020

* Typical light accessories include alternator, small steering pump, and disengaged clutch.

** Typical heavy accessories include hydraulic pump and torque converter.

6B Electrical System Data (nonautomotive)

	6B5.9	6BT5.9	6BTA5.9
Minimum Recommended Battery Capacity @ -18°C [0°F] With Light Accessories*			
12-VDC Starter	800CCA	800CCA	800CCA
24-VDC Starter	400CCA	400CCA	400CCA
With Heavy Accessories**			
12-VDC Starter	950CCA	950CCA	950CCA
24-VDC Starter	475CCA	475CCA	475CCA
Maximum Allowable Resistance of Starting Circuit			
With 12-VDC Starter - Ohms	0.0012	0.0012	0.0012
With 24-VDC Starter - Ohms	0.0020	0.0020	0.0020

* Typical light accessories include alternator, small steering pump, and disengaged clutch.

** Typical heavy accessories include hydraulic pump and torque converter.

Electrical System Data (automotive)

	B3.9	B5.9
Minimum Recommended Battery Capacity @ -18°C [0°F]		
With Light Accessories*		
12-VDC Starter	625CCA	800CCA
24-VDC Starter	400CCA	400CCA
With Heavy Accessories**		
12-VDC Starter	800CCA	950CCA
24-VDC Starter	400CCA	475CCA
Maximum Allowable Resistance of Starting Circuit		
With 12-VDC Starter - Ohms	0.0012	0.0012
With 24-VDC Starter - Ohms	0.0020	0.0020

*Typical light accessories include alternator, small steering pump, and disengaged clutch.

**Typical heavy accessories include hydraulic pump and torque converter.

Fuel Recommendations and Specifications

Fuel Recommendations

⚠ WARNING ⚠

Do not mix gasoline, alcohol, or gasohol with diesel fuel. This mixture can cause explosion.

△ CAUTION △

Because of precise tolerances of diesel injection systems, it is extremely important that the fuel be kept clean and free of dirt or water. Dirt or water in the system can cause severe damage to both the injection pump and the injection nozzles.

△ CAUTION △

Do not use diesel fuel blended with lubricating oil in engines equipped with a catalytic converter (including 1994 model year and beyond). Damage to legally required emission control can result.

Use ASTM No. 2 D fuel with a minimum cetane number of 40. No. 2 diesel fuel gives the best economy and performance under most operating conditions. Fuels with cetane numbers higher than 40 can be required in higher altitudes or extremely low ambient temperatures to prevent misfires and excessive smoke.

At operating temperatures below 0°C [32°F], use a blend of No. 1 D and No. 2 D fuels, also known as “winterized” No. 2 D.

NOTE: No. 1 D fuel can be used; however, fuel economy will suffer.

Use low-sulfur content fuel having a cloud point that is at least 10 degrees below the lowest expected fuel temperature. Cloud point is the temperature at which wax crystals begin to form in diesel fuel.

The viscosity of the fuel **must** be kept above 1.3 centistokes to provide adequate fuel system lubrication at 40°C [104°F].

For a more detailed description of fuel properties, refer to Fuel for Cummins Engines, Bulletin No. 3379001.

The following chart lists acceptable alternate fuels for midrange engines.

⚠ CAUTION ⚠

Do not use diesel fuel blended with lubricating oil in engines equipped with a catalytic converter (including model year 1994 and beyond). Damage to legally required emission control can result.

NOTE: Any adjustment to compensate for reduced performance with a fuel system using alternate fuel is **not** warrantable.

NOTE: Wear on any midrange fuel pump component attributed to the lack of lubrication in the fuel is **not** a warrantable repair.

Acceptable Alternate Fuels - Component Wear/Durability			
Fuel Type	**Bosch® A Pump**	**Bosch® P Pump**	**Bosch® VE Pump**
No. 1-D diesel	OK	OK	OK
No. 2-D diesel	OK	OK	OK
No. 1-K kerosene	OK	OK	*
No. 2-K kerosene	OK	OK	*
Jet-A	OK	OK	*
Jet A-1	OK	OK	*
JP-5	OK	OK	*
JP-8	OK	OK	*
Jet-B	**Not** OK	**Not** OK	**Not** OK
JP-4	**Not** OK	**Not** OK	**Not** OK
Cite	**Not** OK	**Not** OK	**Not** OK
* OK **only** if 5-percent new lubricating oil is blended with these fuels to increase the lubricity to acceptable level.			

Acceptable Alternate Fuels - Component Wear/Durability			
Fuel Type	**Denso EP-9**	**Stanadyne DB-4**	**Lucas CAV (DPA and DPS)**
No. 1-D diesel	OK	OK	OK
No. 2-D diesel	OK	OK	OK
No. 1-K kerosene	OK	*	*
No. 2-K kerosene	OK	*	*
Jet-A	OK	*	*
Jet A-1	OK	*	*
JP-5	OK	*	*
JP-8	OK	*	*
Jet-B	**Not** OK	**Not** OK	**Not** OK
JP-4	**Not** OK	**Not** OK	**Not** OK
Cite	**Not** OK	**Not** OK	**Not** OK
* OK **only** if 5-percent new lubricating oil is blended with these fuels to increase the lubricity to acceptable level.			

Fuel Filters

A = Standard filter used as secondary filter in dual-filter applications

B = Fuel-water separator primary filter for dual-filter applications

C = Fuel-water separator used in single-filter applications.

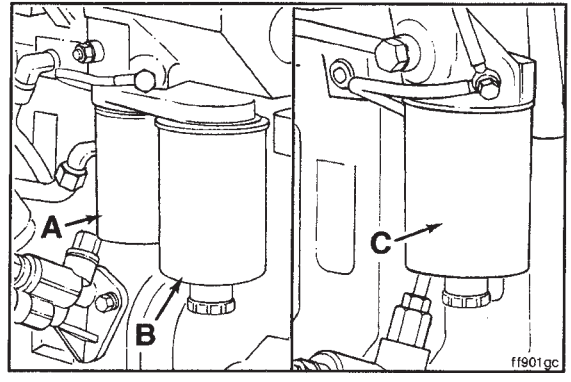

Sealants

General Information

Use the sealants listed below or sealants containing equivalent properties.

Sealants

Description	Sealing Method
Pipe plugs	Precoated Teflon™ or pipe sealer
Cup plugs	Loctite 277 of 11,264
O-rings	No sealant required
Rear camshaft expansion plug	Precoated or Loctite 59,241 liquid Teflon™
Fuel pump studs	Loctite 609
Turbocharger drain in block	Loctite 277 or 11,264
Front seal in gear cover	Loctite 277 or 11,264
Rear seal in gear cover	No sealant
Oil pan at T-joint	Three-Bond™ 1207C (P/N 3823494)

Lubricating Oil Recommendations and Specifications

New Engine Break-in Oils

Do **not** use special “break-in” oils for new or rebuilt Cummins engines. Use the same type of oil during the break-in as that used in normal operation.

Recommended Oil Change Intervals

Refer to the flowchart and table located in Section 2 for the recommended oil change interval based on engine application.

Oil Performance Recommendations

The use of quality engine lubricating oils, combined with appropriate oil drain and filter change intervals, is a critical factor in maintaining engine performance and durability.

Cummins Engine Company, Inc. recommends the use of a high-quality SAE 15W-40 heavy-duty engine oil (such as Cummins Premium Blue®), which meets the American Petroleum Institute (API) performance classification CE/SG.

NOTE: CC/CD or CD/SF engine oils can be used in areas where CE oil is **not** yet available, but the oil change interval **must** be reduced to one half the interval given in the maintenance schedule.

A sulfated ash limit of 1.0 mass percent is suggested for optimum valve and piston deposit and oil consumption control. The sulfated ash **must not** exceed 1.85 mass percent.

Oil Viscosity Recommendations

The use of multiviscosity lubricating oil has been found to improve oil consumption control and improve engine cranking in cold temperatures while maintaining lubrication at high operating temperatures.

While 15W-40 oil is recommended for most climates, refer to the accompanying table for oil viscosity recommendations for extreme climates.

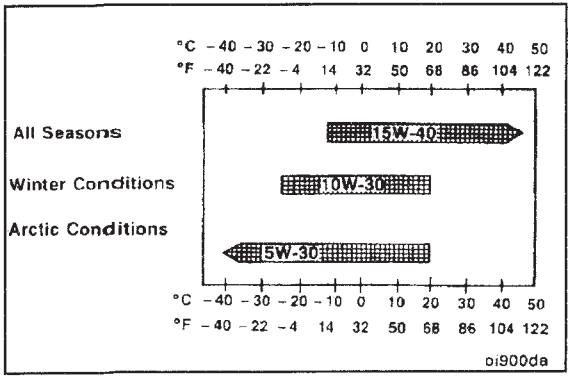

NOTE: Limited use of low-viscosity oils, such as 10W-30, can be used for easier starting and providing sufficient oil flow at ambient temperatures below -5 °C [23°F]. However, continuous use of low-viscosity oils can decrease engine life due to wear. Refer to the accompanying chart.

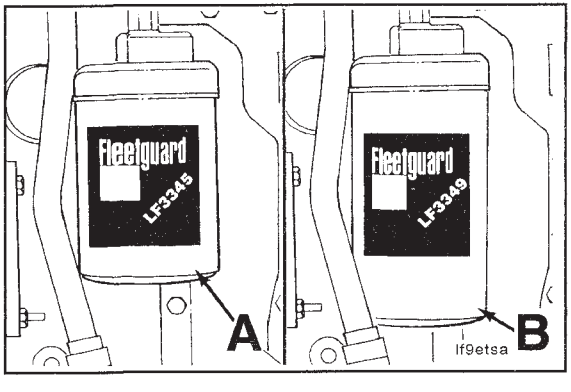

△ CAUTION △

A six-cylinder oil filter can be used on a four-cylinder engine. Do not use a four-cylinder oil filter on a six-cylinder engine. Use of a four-cylinder oil filter on a six-cylinder engine will result in engine damage.

Oil Filters

A = LF 3345 Standard Four-Cylinder Applications

B = LF 3349 Standard Six-Cylinder Applications.

Arctic Operation

Preparatory

⚠ CAUTION ⚠

The use of a synthetic-based oil does not justify extended oil change intervals. Extended oil change intervals can decrease engine life due to factors such as corrosion, deposits, and wear.

If an engine is operated in ambient temperatures consistently below -23°C [-10°F] and there are no provisions to keep the engine warm when it is **not** in operation, use a synthetic CE/SG engine oil with adequate low-temperature properties such as 5W-30.

The oil supplier **must** be responsible for meeting the performance service specifications.

Additional information regarding lubricating oil availability throughout the world is available in the E.M.A. Lubricating Oils Data Book for Heavy-Duty Automotive and Industrial Engines. The data book can be ordered from the Engine Manufacturers Association, One Illinois Center, 111 East Wacker Drive, Chicago, IL, U.S.A. 60601. The telephone number is (312) 644-6610.

Coolant Recommendations and Specifications

Preparatory

Heavy-duty diesel engines require a balanced coolant mixture of water and antifreeze. Drain and replace the mixture every 2 years, 320,000 km [200,000 mi], or 6000 hours of operation, whichever comes first, to eliminate buildup of harmful chemicals.

- **Antifreeze is essential in any climate.** It broadens the operating temperature range by lowering the coolant freezing point by raising its boiling point. Do **not** use more than 50-percent antifreeze in the mixture unless additional freeze protection is required. **Never** use more than 68-percent antifreeze under any condition.
- Use soft water in the coolant mixture. Contaminants in hard water neutralize the corrosion inhibitor components. Water **must not** exceed 300-ppm hardness or contain more than 100 ppm of either chloride or sulfate.
- **Specifications - Use low-silicate antifreeze that meets ASTM4985 test (GM6038M spec.) criteria.**

Concentration - Antifreeze **must** be used in any climate for both freezing and boiling protection. **Cummins recommends a 50-percent concentration level (40-percent to 60-percent range) of ethylene glycol or propylene glycol in most climates.** Antifreeze at 68-percent concentration provides the maximum freezing protection and **must never** be exceeded under any condition. Antifreeze protection decreases above 68 percent.

Antifreeze Protection

Ethylene Glycol	Propylene Glycol
40% = -23°C [-9°F]	40% = -21°C [-6°F]
50% = -37°C [-35°F]	50% = -33°C [-27°F]
60% = -54°C [-65°F]	60% = -49°C [-56°F]
68% = -71°C [-96°F]	68% = -63°C [-81°F]

Concentration Testing - Antifreeze concentration must be checked using a refractometer (such as Fleetguard® Part No. CC2800). "Floating ball" type of density testers or hydrometers are **not** accurate enough for use with heavy-duty diesel cooling systems.

Engine Component Torque Values

General Information

Component	Wrench Size	Torque Value		
		N•m	ft-lb	in-lb
Aftercooler Mounting	10 mm	24	18	
Aftercooler Water Hose Clamp	8 mm	5		44
Alternator Link (Delco 10-15 SI)	13 mm	24	18	
Alternator Link (Delco 20-27 SI)	3/4 in	43	32	
Alternator Mtg. Bolt 10-15 SI	15 mm	43	32	
Alternator Mtg. 27 SI	18 mm	77	57	
Alternator Support (Upper)	10 mm	24	18	
Belt Tensioner Flat Bracket	Allen 5 mm	24	18	
Belt Tensioner Mounting	15 mm	43	32	
Crankshaft Damper and Pulley	15 mm	137	101	
Crossover Clamp	5/16 in	5		44
T-Bolt Type Clamp	11 mm	8		71
Exhaust Outlet Pipe, V-Band Clamp	7/16 in	8		71
Fan Bracket Mounting	10 mm	24	18	
Fan Pulley	10 mm	24	18	

Component	Wrench Size	Torque Value		
		N•m	ft-lb	in-lb
Fan Pulley	13 mm	43	32	

Component	Wrench Size	Torque Value		
		N•m	ft-lb	in-lb
Fuel Filter	75 to 85 mm	Install as specified by filter manufacturer		
Fuel Filter Adapter Nut	24 mm	32	24	
Lubricating Oil Filter	75 to 85 mm	3/4 Turn after Contact		
Lubricating Oil Cooler Assembly	10 mm	24	18	
Lubricating Oil Pan Drain Plug (steel)	17 mm	80	59	
Lubricating Oil Pan Drain Plug (aluminum)	17 mm	55	41	
Lubricating Oil Pan Heater Plug	27 mm	80	59	
Lubricating Oil Pressure Regulator Plug	19 mm	80	59	
Starter Mounting	10 mm	43	32	
Thermostat Housing	10 mm	24	18	
Water Inlet Connection	15 mm	43	32	
Water Pump Mounting	13 mm	24	18	
Valve Cover	15 mm	12		106
Water-in-Fuel Sensor	19 mm	Hand-Tighten		
Top - Load Filter Lid	10 mm	Hand-Tighten		

Capscrew Markings and Torque Values

General Information

△ CAUTION △

When replacing capscrews, always use a capscrew of the same measurement and strength as the capscrew being replaced. Using the wrong capscrews can result in engine damage.

Metric capscrews and nuts are identified by the grade number stamped on the head of the capscrew or on the surface of the nuts. U.S. Customary capscrews are identified by radial lines stamped on the head of the capscrew.

The following examples indicate how capscrews are identified:

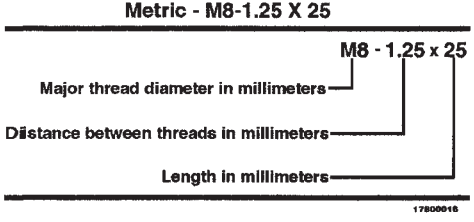

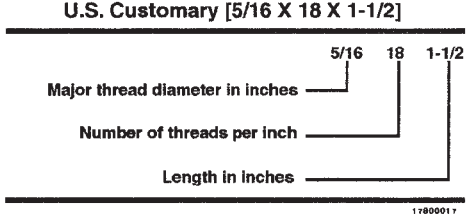

NOTES:

1. **Always** use the torque values listed in the following tables when specific torque values are **not** available.
2. Do **not** use the torque values in place of those specified in other sections of this manual.
3. The torque values in the table are based on the use of lubricated threads.
4. When the ft-lb value is less than 10, convert the ft-lb value to in-lb to obtain a better torque with an in-lb torque wrench. Example: 6 ft-lb equals 72 in-lb.

Capscrew Markings and Torque Values - Metric

Commercial Steel Class	8.8	10.9	12.9
Capscrew Head Markings	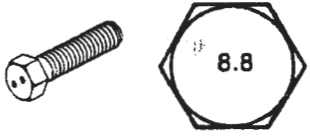	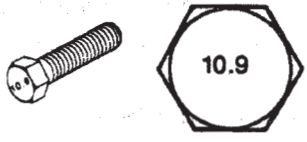	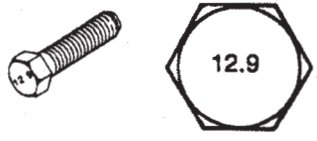

Body Size	Torque				Torque				Torque			
Diameter	Cast Iron		Aluminum		Cast Iron		Aluminum		Cast Iron		Aluminum	
mm	N•m	ft-lb	N•m	ft-lb	N•m	ft-lb	N•m	ft-lb	N•m	ft-lb	N•m	ft-lb
6	9	5	7	4	13	10	7	4	14	9	7	4
7	14	9	11	7	18	14	11	7	23	18	11	7
8	23	17	18	14	33	25	18	14	40	29	18	14
10	45	33	30	25	65	50	30	25	70	50	30	25
12	80	60	55	40	115	85	55	40	125	95	55	40
14	125	90	90	65	180	133	90	65	195	145	90	65
16	195	140	140	100	280	200	140	100	290	210	140	100
18	280	200	180	135	390	285	180	135	400	290	180	135
20	400	290	—	—	550	400	—	—	—	—	—	—

Capscrew Markings and Torque Values - U.S. Customary

SAE Grade Number	5	8
Capscrew Head Markings These are all SAE Grade 5 (3 line)		



Capscrew Body Size	Capscrew Torque - Grade 5 Capscrew				Capscrew Torque - Grade 8 Capscrew			
	Cast Iron		Aluminum		Cast Iron		Aluminum	
	N•m	ft-lb	N•m	ft-lb	N•m	ft-lb	N•m	ft-lb
1/4 - 20	9	7	8	6	15	11	8	6
1/4 - 28	12	9	9	7	18	13	9	7
5/16 - 18	20	15	16	12	30	22	16	12
5/16 - 24	23	17	19	14	33	24	19	14
3/8 - 16	40	30	25	20	55	40	25	20
3/8 - 24	40	30	35	25	60	45	35	25
7/16 - 14	60	45	45	35	90	65	45	35
7/16 - 20	65	50	55	40	95	70	55	40
1/2 - 13	95	70	75	55	130	95	75	55
1/2 - 20	100	75	80	60	150	110	80	60
9/16 - 12	135	100	110	80	190	140	110	80
9/16 - 18	150	110	115	85	210	155	115	85
5/8 - 11	180	135	150	110	255	190	150	110
5/8 - 18	210	155	160	120	290	215	160	120
3/4 - 10	325	240	255	190	460	340	255	190
3/4 - 16	365	270	285	210	515	380	285	210
7/8 - 9	490	360	380	280	745	550	380	280
7/8 - 14	530	390	420	310	825	610	420	310
1 - 8	720	530	570	420	1100	820	570	420
1 - 14	800	590	650	480	1200	890	650	480

Section W - Warranty

Section Contents

	Page
All Bus Categories Worldwide (Except U.S./Canada Diesel Powered School Buses)	W-7
B5.9 & C8.3 Engines United States and Canada Recreational Vehicle	W-25
B/ISB Engines United States and Canada Automotive	W-1
California Emission Control System Warranty, On-Highway	W-36
Moteurs tout terrain Etats-Unis et Canada	W-19
Off-Highway Engines United States and Canada	W-13
United States and Canada Diesel Engine School Bus	W-30

THIS PAGE LEFT INTENTIONALLY BLANK

B/ISB Engines United States and Canada Automotive

Coverage

Products Warranted

This warranty applies to new B and ISB series diesel Engines sold by Cummins and delivered to the first user on or after October 1, 1996, that are used in automotive on-highway applications in the United States* or Canada with three exceptions. Cummins provides different warranty coverage for engines used in fire apparatus truck and crash truck, bus and coach, and recreational vehicle applications.

Base Engine Warranty

This warranty covers any failures of the Engine which result, under normal use and service, from a defect in material or factory workmanship (Warrantable Failure). This coverage begins with the sale of the engine by Cummins and ends two years (2 years or 50,000 miles/80,468 kilometers for 4B whichever occurs first) from the date of delivery of the Engine to the first user.

Additional coverage is outlined in the Emission Warranty section.

These warranties are made to all Owners in the chain of distribution, and Coverage continues to all subsequent Owners until the end of the periods of Coverage.

Cummins Responsibilities

Cummins will pay for all parts and labor needed to repair the damage to the Engine resulting from a Warrantable Failure.

Cummins will pay for the lubricating oil, antifreeze, filter elements, belts, hoses and other maintenance items that are not reusable due to the Warrantable Failure.

Cummins will pay for reasonable labor costs for Engine removal and reinstallation when necessary to repair a Warrantable Failure.

Cummins will pay reasonable costs for towing a vehicle disabled by a Warrantable Failure to the nearest authorized repair station for the first year from the date of delivery of the Engine to the first user or the duration of the warranty, whichever occurs first. In lieu of the towing expense, Cummins will pay reasonable costs for mechanics to travel to and from the location of the vehicle, including meals, mileage,

and lodging when the repair is performed at the site of the failure.

Owner Responsibilities

Owner is responsible for the operation and maintenance of the Engine as specified in the applicable Cummins Operation and Maintenance Manual. Owner is also responsible for providing proof that all recommended maintenance has been performed.

Before the expiration of the applicable warranty, Owner must notify a Cummins distributor, authorized dealer or other repair location approved by Cummins of any Warrantable Failure and make the Engine available for repair by such facility. Except for Engines disabled by a Warrantable Failure during the first year from the date of delivery of the Engine to the first user or the duration of the warranty, whichever occurs first, Owner must also deliver the Engine to the repair facility. Locations in the United States and Canada are listed in the Cummins United States and Canada Sales and Service Directory.

Owner is responsible for the cost of lubricating oil, antifreeze, filter elements and other maintenance items provided during warranty repairs unless such items are not reusable due to the Warrantable Failure.

Owner is responsible for communication expenses, meals, lodging and similar costs incurred as a result of a Warrantable Failure.

Owner is responsible for non-Engine repairs and for ''downtime'' expenses, cargo damage, fines, all applicable taxes, all business costs and other losses resulting from a Warrantable Failure.

Limitations

Cummins is not responsible for failures or damage resulting from what Cummins determines to be abuse or neglect, including but not limited to: operation without adequate coolants or lubricants; overfueling; overspeeding; lack of maintenance of lubricating, cooling or intake systems; improper storage, starting, warm-up, run-in or shutdown practices; unauthorized modifications of the Engine. Cummins is also not responsible for failures caused by incorrect oil or fuel or by water, dirt or other contaminants in the fuel or oil.

This warranty does not apply to accessories supplied by Cummins which bear the name of another company. This category includes, but is not limited to: alternators, starters, fans, air conditioning compressors, clutches, filters, transmissions, torque converters, vacuum pumps, engine exhaust brakes, power steering pumps, non-Cummins fan drives, and air compressors.

Failures resulting in excessive oil consumption are covered for the duration of the coverage or 100,000 miles (160,935 kilometers) or 7000 hours from the date of delivery of the Engine to the first user, whichever of the three occurs first. Before a claim for excessive oil consumption will be considered, Owner must submit adequate documentation to show that consumption exceeds Cummins published standards.

Failures of belts and hoses supplied by Cummins are covered during the first year from the date of delivery of the Engine to the first user or the duration of the warranty, whichever occurs first.

Parts used to repair a Warrantable Failure may be new Cummins parts, Cummins approved rebuilt parts, or repaired parts. Cummins is not responsible for failures resulting from the use of parts not approved by Cummins.

A new Cummins or Cummins approved rebuilt part used to repair a Warrantable Failure assumes the identity of the part it replaced and is entitled to the remaining coverage hereunder.

CUMMINS DOES NOT COVER WEAR OR WEAROUT OF COVERED PARTS.

CUMMINS IS NOT RESPONSIBLE FOR INCIDENTAL OR CONSEQUENTIAL DAMAGES.

THIS WARRANTY AND THE EMISSION WARRANTY SET FORTH HEREINAFTER ARE THE SOLE WARRANTIES MADE BY CUMMINS IN REGARD TO THESE ENGINES. CUMMINS MAKES NO OTHER WARRANTIES, EXPRESS OR IMPLIED, OR OF MERCHANTABILITY OR FITNESS FOR A PARTICULAR PURPOSE.

This warranty gives you specific legal rights, and you may also have other rights which vary from state to state.

Emission Warranty

Products Warranted

This emission warranty applies to new B and ISB series diesel Engines marketed by Cummins that are used in the United States* in vehicles designed for transporting persons or property on a street or highway. This warranty applies to Engines delivered to the ultimate purchaser on or after October 1, 1996.

Coverage

Cummins warrants to the ultimate purchaser and each subsequent purchaser that the Engine is designed, built and equipped so as to conform at the time of sale by Cummins with all U.S. Federal emission regulations applicable at the time of manufacture and that it is free from defects in material or factory workmanship which would cause it not to meet these regulations within the longer of the following periods: (A) Five years or 100,000 miles (160,935 kilometers) of operation, whichever occurs first, as measured from the date of delivery of the Engine to the ultimate purchaser, or (B) The Base Engine Warranty.

If the vehicle in which the Engine is installed is registered in the state of California, a separate California Emission Warranty also applies.

Limitations

Failures, other than those resulting from defects in material or factory workmanship, are not covered by this warranty.

Cummins is not responsible for failures or damage resulting from what Cummins determines to be abuse or neglect, including, but not limited to: operation without adequate coolants or lubricants; overfueling; overspeeding; lack of maintenance of lubricating, cooling or intake systems; improper storage, starting, warm-up, run-in or shutdown practices; unauthorized modifications of the Engine. Cummins is also not responsible for failures caused by incorrect oil or fuel or by water, dirt or other contaminants in the fuel or oil.

Cummins is not responsible for non-Engine repairs, ''downtime'' expenses, cargo damage, fines, all applicable taxes, all business costs or other losses resulting from a Warrantable Failure.

CUMMINS IS NOT RESPONSIBLE FOR INCIDENTAL OR CONSEQUENTIAL DAMAGES.

* United States includes American Samoa, the Commonwealth of Northern Mariana Islands, Guam, Puerto Rico, and the U.S. Virgin Islands.

All Bus Categories Worldwide (Except U.S./Canada Diesel Powered School Buses)

Coverage

Products Warranted

This warranty applies to new diesel, LPG, compressed or liquid natural gas fueled engines sold by Cummins and delivered to the first user on or after January 1, 1999, that are used in all bus categories worldwide (except U.S./Canada diesel powered school buses).

Base Engine Warranty

The Base Engine Warranty covers any failures of the Engine which result, under normal use and service, from a defect in material or factory workmanship (Warrantable Failure). This coverage begins with the sale of the engine by Cummins and continues for two years from the date of delivery of the Engine to the first user.

Extended Major Components Warranty

The Extended Major Components Warranty applies to all except B and ISB series Engines and covers Warrantable Failures of the engine cylinder block, camshaft, crankshaft, connecting rods and Cummins fan clutch (Covered Parts).

Bushing and bearing failures are not covered.

This coverage begins with the expiration of the Base Engine Warranty and ends three years or 300,000 miles (482,805 kilometers) or 10,800 hours of operation, whichever occurs first, from the date of delivery of the Engine to the first user.

Emission Warranty

Additional coverage is outlined under the Emission Warranty.

Consumer Products

This warranty on Consumer Products in the United States is a **LIMITED** warranty. **CUMMINS IS NOT RESPONSIBLE FOR INCIDENTAL OR CONSEQUENTIAL DAMAGES.** Any implied warranties applicable to Consumer Products in the United States terminate concurrently with the expiration of the express warranties applicable to such products. Some states or countries do not allow the exclusion of incidental or consequential damages, or limitations on how long an implied warranty lasts, so the limitations or exclusions herein may not apply to you.

These warranties are made to all Owners in the chain of distribution and Coverage continues to all subsequent Owners until the end of the periods of Coverage.

Cummins Responsibilities

During The Base Engine Warranty

Cummins will pay for all parts and labor needed to repair the damage to the Engine resulting from a Warrantable Failure.

Cummins will pay for the lubricating oil, antifreeze, filter elements, belts, hoses and other maintenance items that are not reusable due to the Warrantable Failure.

Cummins will pay for reasonable labor costs for Engine removal and reinstallation when necessary to repair a Warrantable Failure.

Cummins will pay reasonable costs for towing a vehicle disabled by a Warrantable Failure to the nearest authorized repair location. In lieu of towing expenses, Cummins will pay reasonable costs for mechanics to travel to and from the location of the vehicle, including meals, mileage, and lodging, when the repair is performed at the site of the failure.

During The Extended Major Components Warranty

Cummins will pay for the repair or, at its option, replacement of the defective Covered Part and any Covered Part damaged by a Warrantable Failure of the defective Covered Part.

Owner Responsibilities

During The Base Engine Warranty

Owner is responsible for the cost of lubricating oil, antifreeze, filter elements and other maintenance items replaced during warranty repairs unless such items are not reusable due to the Warrantable Failure.

During The Extended Major Components Warranty

Owner is responsible for the cost of all labor needed to repair the Engine, including the labor to remove and reinstall the engine. When Cummins elects to repair a part instead of replacing it, Owner is not responsible for the labor needed to repair the part.

Owner is responsible for the cost of all parts required for the repair except for the defective Covered Part and any Covered Part damaged by a Warrantable Failure of the defective Covered Part.

Owner is responsible for the cost of lubricating oil, antifreeze, filter elements and other maintenance items replaced during the repair.

During The Base Engine and Extended Major Components Warranties

Owner is responsible for the operation and maintenance of the Engine as specified in the applicable Cummins Operation and Maintenance Manuals. Owner is also responsible for providing proof that all recommended maintenance has been performed.

Before the expiration of the applicable warranty, Owner must notify a Cummins distributor, authorized dealer or other repair location approved by Cummins of any Warrantable Failure and make the Engine available for repair by such facility. Except for Engines disabled by a Warrantable Failure during the Base Engine Warranty, the Owner must also deliver the Engine to the repair facility. Locations in the United States and Canada are listed in the Cummins United States and Canada Sales and Service Directory.

Owner is responsible for communication expenses, meals, lodging and similar costs incurred as a result of a Warrantable Failure.

Owner is responsible for non-Engine repairs and for "downtime" expenses, passenger delays, fines, cargo damage, all applicable taxes, all business costs, and other losses resulting from a Warrantable Failure.

Limitations

Cummins is not responsible for failures or damage resulting from what Cummins determines to be abuse or neglect, including, but not limited to: operation without adequate coolants or lubricants; overfueling; overspeeding; lack of maintenance of lubricating, cooling or intake systems; improper storage, starting, warm-up, run-in or shutdown practices; unauthorized modifications of the Engine. Cummins is also not responsible for failures caused by incorrect oil or fuel or by water, dirt or other contaminants in the fuel or oil.

This warranty does not apply to accessories which bear the name of another company. Such non-warranted accessories include, but are not limited to: alternators, starters, fans, air conditioning compressors, clutches, filters, transmissions, torque converters, vacuum pumps, power steering pumps and air compressors.

Excessive oil consumption for B series engines is covered for the duration of the coverage or 100,000 miles (160,935 kilometers) or 7000 hours from the date of delivery of the Engine to the first user, whichever of the three occurs first. Before a claim for excessive oil consumption will be considered, Owner must submit adequate documentation to show that consumption exceeds Cummins published standards.

Failures of belts and hoses supplied by Cummins are covered for the first year from the date of delivery of the Engine to the first user.

Parts used to repair a Warrantable Failure may be new Cummins parts, Cummins approved rebuilt parts, or repaired parts. Cummins is not responsible for failures resulting from the use of parts not approved by Cummins.

A new Cummins or Cummins approved rebuilt part used to repair a Warrantable Failure assumes the identity of the part it replaced and is entitled to the remaining coverage hereunder.

CUMMINS DOES NOT COVER WEAR OR WEAROUT OF COVERED PARTS.

CUMMINS IS NOT RESPONSIBLE FOR INCIDENTAL OR CONSEQUENTIAL DAMAGES.

THESE WARRANTIES AND THE EMISSION WARRANTY SET FORTH HEREINAFTER ARE THE SOLE WARRANTIES MADE BY CUMMINS IN REGARD TO THESE ENGINES. CUMMINS MAKES NO OTHER WARRANTIES, EXPRESS OR IMPLIED, OR OF MERCHANTABILITY OR FITNESS FOR A PARTICULAR PURPOSE.

This warranty gives you specific legal rights, and you may also have other rights which vary from state to state or country to country.

Emission Warranty

Products Warranted

This emission warranty applies to new diesel, LPG, compressed or liquid natural gas fueled engines marketed by Cummins that are used in the United States* in vehicles designed for transporting persons or property on a street or highway. This warranty applies to Engines delivered to the ultimate purchaser on or after January 1, 1999.

Coverage

Cummins warrants to the ultimate purchaser and each subsequent purchaser that the Engine is designed, built and equipped so as to conform at the time of sale by Cummins with all U.S. Federal emission regulations applicable at the time of manufacture and that it is free from defects in material or factory workmanship which would cause it not to meet these regulations within the longer of the following periods: (A) Five years or 100,000 miles (160,935 kilometers) of operation, whichever occurs first, as measured from the date of delivery of the Engine to the ultimate purchaser, or (B) The Base Engine Warranty.

If the vehicle in which the Engine is installed is registered in the state of California, a separate California Emission Warranty also applies.

Limitations

Failures, other than those resulting from defects in material or factory workmanship, are not covered by this warranty.

Cummins is not responsible for failures or damage resulting from what Cummins determines to be abuse or neglect, including, but not limited to: operation without adequate coolants or lubricants; overfueling; overspeeding; lack of

maintenance of lubricating, cooling or intake systems; improper storage, starting, warm-up, run-in or shutdown practices; unauthorized modifications of the Engine. Cummins is also not responsible for failures caused by incorrect oil or fuel or by water, dirt or other contaminants in the fuel or oil.

Cummins is not responsible for non-Engine repairs, ''downtime'' expenses, cargo damage, fines, all applicable taxes, all business costs, and other losses resulting from a Warrantable Failure.

CUMMINS IS NOT RESPONSIBLE FOR INCIDENTAL OR CONSEQUENTIAL DAMAGES.

* United States includes American Samoa, the Commonwealth of Northern Mariana Islands, Guam, Puerto Rico, and the U.S. Virgin Islands.

Off-Highway Engines United States and Canada

Coverage

Products Warranted

This warranty applies to new Engines sold by Cummins and delivered to the first user on or after April 1, 1999, that are used in industrial (off-highway) applications in the United States* and Canada, except for Engines used in marine, generator drive and certain defense applications, for which different warranty coverage is provided.

Base Engine Warranty

This warranty covers any failures of the Engine, under normal use and service, which result from a defect in material or factory workmanship (Warrantable Failures).

Coverage begins with the sale of the Engine by Cummins. Coverage continues for two years or 2,000 hours of operation, whichever occurs first, from the date of delivery of the Engine to the first user, or from the date the unit is first leased, rented or loaned, or when the Engine has been operated for 50 hours, whichever occurs first. If the 2,000 hour limit is exceeded during the first year, Coverage continues until the end of the first year.

Extended Major Components Warranty

The Extended Major Components Warranty covers Warrantable Failures of the Engine cylinder block, camshaft, crankshaft and connecting rods (Covered Parts).

Bushing and bearing failures are not covered.

This Coverage begins with the expiration of the Base Engine Warranty and ends three years or 10,000 hours of operation from the date of delivery of the Engine to the first user, or from the date the unit is first leased, rented or loaned, or from when the Engine has been operated for 50 hours, whichever occurs first.

Consumer Products

The warranty on Consumer Products in the United States is a LIMITED warranty. **CUMMINS IS NOT RESPONSIBLE FOR INCIDENTAL OR CONSEQUENTIAL DAMAGES.** Any implied warranties applicable to Consumer Products in the United States terminate concurrently with the expiration of the express warranties applicable to the product. In the United States, some states do not allow the exclusion of incidental or consequential damages, or limitations on how long an implied warranty lasts, so the limitations or exclusions herein may not apply to you.

These warranties are made to all Owners in the chain of distribution, and Coverage continues to all subsequent Owners until the end of the periods of Coverage.

Cummins' Responsibilities

During The Base Engine Warranty

Cummins will pay for all parts and labor needed to repair the damage to the Engine resulting from a Warrantable Failure.

Cummins will pay for the lubricating oil, antifreeze, filter elements, and other maintenance items that are not reusable due to the Warrantable Failure.

Cummins will pay reasonable costs for mechanics to travel to and from the equipment site, including meals, mileage and lodging, when the repair is performed at the site of the failure.

Cummins will pay reasonable labor costs for Engine removal and reinstallation when necessary to repair a Warrantable Failure.

During The Extended Major Components Warranty

Cummins will pay for the repair or, at its option, replacement of the defective Covered Part and any Covered Part damaged by a Warrantable Failure of the defective Covered part.

Owner's Responsibilities

During The Base Engine Warranty

Owner is responsible for the cost of lubricating oil, antifreeze, filter elements and other maintenance items provided during warranty repairs unless such items are not reusable due to the Warrantable Failure.

During The Extended Major Components Warranty

Owner is responsible for the cost of all labor needed to repair the Engine, including the labor to remove and reinstall the Engine. When Cummins elects to repair a part instead of replacing it, Owner is not responsible for the labor needed to repair the part.

Owner is responsible for the cost of all parts required for the repair except for the defective Covered Part and any Covered Part damaged by a Warrantable Failure of the defective Covered Part.

Owner is responsible for the cost of lubricating oil, antifreeze, filter elements and other maintenance items replaced during repair of a Warrantable Failure.

During The Base Engine and Extended Major Components Warranties

Owner is responsible for the operation and maintenance of the Engine as specified in the applicable Cummins Operation and Maintenance Manual. Owner is also responsible for providing proof that all recommended maintenance has been performed.

Before the expiration of the applicable warranty, Owner must notify a Cummins distributor, authorized dealer or other repair location approved by Cummins of any Warrantable Failure and make the Engine available for repair by such facility. Locations in the United States and Canada are listed in the Cummins Off Highway Authorized Dealer Directory.

Owner is responsible for communication expenses, meals, lodging and similar costs incurred as a result of a Warrantable Failure.

Owner is responsible for non-Engine repairs, ''downtime'' expenses, cargo damage, fines, all applicable taxes, all business costs and other losses resulting from a Warrantable Failure.

Limitations

Cummins is not responsible for failures or damage resulting from what Cummins determines to be abuse or neglect, including, but not limited to: operation without adequate coolants or lubricants; overfueling; overspeeding; lack of maintenance of lubricating, cooling or intake systems; improper storage, starting, warm-up, run-in or shutdown practices; unauthorized modifications of the Engine. Cummins is also not responsible for failures caused by incorrect oil or fuel or by water, dirt or other contaminants in the fuel or oil.

For power units and fire pumps (package units), this warranty applies to accessories, except for clutches and filters, supplied by Cummins which bear the name of another company.

Except for power units and fire pumps, this warranty does not apply to accessories which bear the name of another company. Such non-warranted accessories include, but are not limited to: alternators, starters, fans**, air conditioning compressors, clutches, filters, transmissions, torque converters, steering pumps, and non-Cummins fan drives, engine compression brakes and air compressors.

Cummins Compusave units are covered by a separate warranty.

Before a claim for excessive oil consumption will be considered, Owner must submit adequate documentation to show that consumption exceeds Cummins published standards.

Failures of belts and hoses supplied by Cummins are not covered beyond the first 500 hours or one year of operation, whichever occurs first.

Parts used to repair a Warrantable Failure may be new Cummins parts, Cummins-approved rebuilt parts, or repaired parts. Cummins is not responsible for failures resulting from the use of parts not approved by Cummins.

A new Cummins or Cummins-approved rebuilt part used to repair a Warrantable Failure assumes the identity of the part it replaced and is entitled to the remaining coverage hereunder.

CUMMINS DOES NOT COVER WEAR OR WEAROUT OF COVERED PARTS.

CUMMINS IS NOT RESPONSIBLE FOR INCIDENTAL OR CONSEQUENTIAL DAMAGES.

THESE WARRANTIES SET FORTH HEREIN ARE THE SOLE WARRANTIES MADE BY CUMMINS IN REGARD TO THESE ENGINES. CUMMINS MAKES NO OTHER WARRANTIES, EXPRESS OR IMPLIED, OR OF MERCHANTABILITY OR FITNESS FOR A PARTICULAR PURPOSE.

This warranty gives you specific legal rights, and you may also have other rights which vary from state to state.

Emission Warranty

Products Warranted

This emission warranty applies to new Engines marketed by Cummins that are used in the United States* in vehicles designed for Industrial off-highway use. This warranty applies to Engines delivered to the ultimate purchaser on or after April 1, 1999 for engines up to 750 horsepower, on or after January 1, 2000 for engines 751 horsepower and over.

Coverage

Cummins warrants to the ultimate purchaser and each subsequent purchaser that the Engine is designed, built and equipped so as to conform at the time of sale by Cummins with all U.S. Federal emission regulations applicable at the time of manufacture and that it is free from defects in workmanship or material which would cause it not to meet these regulations within the longer of the following periods: (A) Five years or 3,000 hours of operation, whichever occurs first, as measured from the date of delivery of the Engine to the ultimate purchaser, or (B) The Base Engine Warranty.

If the vehicle in which the Engine is installed is registered in the state of California, a separate California Emission Warranty also applies.

Limitations

Failures, other than those resulting from defects in materials, or workmanship, are not covered by this warranty.

Cummins is not responsible for failures or damage resulting from what Cummins determines to be abuse or neglect, including, but not limited to: operation without adequate coolant or lubricants; overfueling; overspeeding; lack of maintenance of lubricating, cooling or intake systems; improper storage, starting, warm-up, run-in or shutdown practices; unauthorized modifications of the Engine. Cummins is also not responsible for failures caused by incorrect

fuel or by water, dirt or other contaminants in the fuel.

Cummins is not responsible for non-Engine repairs, ''downtime'' expenses, cargo damage, fines, all business costs or other losses resulting from a Warrantable Failure.

CUMMINS IS NOT RESPONSIBLE FOR INCIDENTAL OR CONSEQUENTIAL DAMAGES.

* Includes American Samoa, the Commonwealth of Northern Mariana Islands, Guam, Puerto Rico, and the U.S. Virgin Islands.

** Alternators, starters, and fans ARE covered for the duration of the base engine warranty on B3.3 engines.

Moteurs tout terrain Etats-Unis et Canada

Garantie

Produits garantis

La présente garantie s'applique aux nouveaux moteurs vendus par Cummins et livrés au premier utilisateur à compter du 1er avril 1999 pour un usage dans des applications industrielles (tout terrain) aux Etats-Unis* et au Canada, à l'exception des moteurs utilisés dans des applications marines et d'entraînement de générateur, ainsi que dans certaines applications militaires, pour lesquelles une couverture de garantie différente est fournie.

Garantie de base du moteur

La présente garantie couvre toute panne du moteur, dans des conditions normales d'utilisation et d'entretien, provenant d'un défaut de matériau ou de fabrication en usine (pannes couvertes).

La garantie prend effet à dater de la vente du moteur. Elle s'étend sur une période de deux ans ou 2 000 heures d'utilisation, suivant lequel de ces termes intervient en premier, à compter de la date de livraison du moteur au premier utilisateur ou de la date à laquelle le moteur est mis en location de courte ou longue durée ou en prêt pour la première fois, ou encore lorsque le moteur a été utilisé pendant 50 heures, suivant lequel de ces termes intervient en premier. En cas d'une utilisation dépassant 2 000 heures durant la première année, la période de garantie s'étend jusqu'à la fin de la première année.

Garantie étendue des composants principaux

La Garantie prolongée des principaux éléments couvre les pannes justifiables du bloc-cylindre, de l'arbre à cames, du vilebrequin, des bielles du moteur (pièces couvertes).

Les pannes de bagues et roulement de paliers ne sont pas garanties.

Cette couverture prend effet à la date d'expiration de la garantie de base du moteur et se termine trois ans ou 10 000 heures d'utilisation après la date de livraison du moteur au premier utilisateur ou à compter de la date à laquelle le moteur est mis en location de courte ou longue durée ou en prêt pour la première fois, ou encore lorsque le moteur

a été utilisé pendant 50 heures, suivant lequel de ces termes intervient en premier.

Produits de consommation

La garantie sur les produits de consommation aux États-Unis est LIMITEE. CUMMINS N'EST PAS RESPONSABLE DES DOMMAGES INDIRECTS OU INDUITS Aux États-Unis, toute garantie implicite applicable aux produits de consommation vient à échéance à l'expiration des garanties expresses applicables au produit. Certains Etats d'Amérique réfutent l'exclusion des détériorations provoquées par des dommages indirects ou induits, ou les limitations de durée de garanties implicites.

Ces garanties s'appliquent à tous les propriétaires du circuit de distribution et la couverture s'applique à tous les propriétaires ultérieurs jusqu'à la fin de la période de couverture.

Responsabilités Cummins

Pendant la garantie de base du moteur

Cummins réglera tous les frais des pièces détachées et de la main d'oeuvre nécessaires à la réparation du produit endommagé en raison d'une panne justifiable.

Cummins prend en charge l'huile, l'antigel, les cartouches de filtre ainsi que d'autres pièces ou fournitures d'entretien non réutilisables en raison d'une panne sous garantie.

Cummins paie la majeure partie des frais de déplacement des mécaniciens ce qui comprend les frais de repas, les frais kilométriques et les frais d'hébergement, dans le cas où une réparation doit être effectuée sur les lieux de la panne.

Cummins prend en charge une partie des frais de main d'oeuvre lorsqu'il est nécessaire de déposer et de remonter le moteur lors d'une panne sous garantie.

Pendant la garantie étendue des principaux composants

Cummins réglera la réparation ou, s'il préfère, le remplacement de la pièce couverte défectueuse et de toute pièce couverte endommagée par une panne justifiable de la pièce couverte défectueuse.

Responsabilités du propriétaire

Pendant la garantie de base du moteur

Le propriétaire doit régler l'huile de graissage, l'antigel, les éléments filtrants et les autres articles d'entretien remplacés au cours des réparations effectuées dans le cadre de la garantie à moins que ces articles ne puissent plus être utilisés en raison d'une panne justifiable.

Pendant la garantie étendue des principaux composants

Le propriétaire est responsable de tous les frais de la main-d'oeuvre nécessaire à la réparation du moteur, y compris les frais de main-d'oeuvre pour démonter et réinstaller le moteur. Lorsque Cummins choisit de réparer une pièce plutôt que de la remplacer, le propriétaire n'est pas responsable de la main-d'oeuvre nécessaire à la réparation de la pièce.

Le propriétaire supporte les frais occasionnés par le remplacement des pièces excepté pour la pièce défectueuse sous garantie et toute pièce garantie dont la détérioration a été provoquée par une panne sous garantie de la pièce défectueuse sous garantie.

Le propriétaire supporte les frais de remplacement de l'huile, de l'antigel, des cartouches de filtre ainsi que des autres pièces ou fournitures lors d'une réparation en raison d'une panne sous garantie.

PENDANT LA PÉRIODE DE GARANTIE DE BASE DU MOTEUR ET DE GARANTIE ETENDUE DES COMPOSANTS PRINCIPAUX

Le propriétaire est responsable de l'utilisation et de l'entretien du moteur comme il est spécifié dans le manuel d'utilisation et d'entretien Cummins. Le propriétaire doit également pouvoir prouver que tous les travaux d'entretien recommandés ont été effectués.

Avant la date d'expiration de la garantie en vigueur, le propriétaire doit avertir un concessionnaire Cummins, un concessionnaire agréé ou un autre site de réparation homologué, de toute panne sous garantie et pouvoir confier le moteur afin qu'il puisse être réparé. Les sites de réparation aux États-Unis ainsi qu'au Canada sont énumérés dans le répertoire des concessionnaires moteur tout terrain Cummins agréé.

Le propriétaire supporte les frais de communication, de repas, d'hébergement et d'autres frais similaires occasionnés par une panne sous garantie.

Le propriétaire est responsable des réparations autres que celles du moteur, des dépenses de temps mort, des dommages au chargement, des amendes, de toutes les taxes en vigueur, de tous les coûts commerciaux et de toute autre dépense résultant d'une panne sous garantie.

Limites

Cummins décline toute responsabilité en cas de pannes ou de détériorations résultant de ce que Cummins considère comme un abus ou une négligence de la part du propriétaire, notamment et non limitativement: une utilisation sans les lubrifiants ou les liquides de refroidissement appropriés; surremplissage de carburant; vitesse trop élevée; négligence d'entretien des systèmes d'admission, de refroidissement ou de lubrification; mauvaises conditions d'entreposage, pratiques inappropriées de démarrage, de chauffage, de rodage ou d'arrêt; modifications non homologuées du moteur. Cummins n'est également pas responsable des pannes provoquées par l'utilisation d'une huile, d'un carburant ou d'une eau non appropriés, ainsi que des pannes provoquées par la présence de dépôts dans le carburant ou dans l'huile.

Pour les générateurs de courant et les pompes à incendie (unités conditionnées), cette garantie s'applique aux accessoires, sauf pour les embrayages et filtres fournis par Cummins qui portent le nom d'une autre société.

Mis à part les générateurs de courant et les pompes à incendie, Cummins ne garantit pas les accessoires portant le nom d'une autre société. Ces accessoires comprennent: les alternateurs, les démarreurs, les ventilateurs**, les compresseurs d'air conditionnés, les embrayages, les filtres, les transmissions, les convertisseurs de couple, les pompes d'assistance de direction, les entraînements ventilateurs d'une marque différente de celle de Cummins, les freins de compression moteur et les compresseurs d'air.

Les unités Compusave Cummins sont assujetties à une garantie différente.

Avant qu'une réclamation concernant une consommation excessive en huile soit prise en compte, le propriétaire doit fournir une documentation adéquate afin de pouvoir prouver que la consommation dépasse celle définie par Cummins.

Les détériorations des courroies et flexibles fournis par Cummins ne sont pas garanties au-delà des 500 premières heures ou après un an d'utilisation, suivant lequel de ces termes intervient en premier.

Les pièces utilisées pour la réparation d'une panne sous garantie peuvent être des pièces Cummins neuves, des pièces reconditionnées homologuées ou des pièces réparées. Cummins n'est pas responsable des pannes résultant de l'utilisation de pièces non homologuées.

Une nouvelle pièce Cummins ou une pièce reconditionnée homologuée utilisée pour la réparation d'une panne sous garantie est alors identifiée comme la pièce originale remplacée en vertu de cette garantie.

CUMMINS NE COUVRE PAS L'USURE DES PIECES COUVERTES.

CUMMINS N'EST PAS RESPONSABLE DES DOMMAGES INDIRECTS OU INDUITS

LES PRESENTES GARANTIES SONT LES GARANTIES EXCLUSIVES DE CUMMINS CONCERNANT CES MOTEURS. CUMMINS NE CONSENT AUCUNE AUTRE GARANTIE EXPRESSE OU IMPLICITE ET AUCUNE GARANTIE DE BONNE QUALITÉ COMMERCIALE OU D'ADAPTATION A UN USAGE SPÉCIFIQUE.

Cette garantie vous procure certains droits qui peuvent varier d'un État à l'autre.

Garantie concernant l'émission de polluants

Produits garantis

Cette garantie s'applique aux nouveaux moteurs commercialisés par Cummins et utilisés aux États-Unis* sur des véhicules à usage industriel tout-terrain. La présente garantie s'applique aux moteurs livrés à l'acheteur final à compter du 1er avril 1999 pour les moteurs jusqu'à 750 chevaux ou à compter du 1er janvier 2000 pour les moteurs d'au moins 751 chevaux.

Garantie

Cummins garantit au dernier acheteur et à chaque futur acheteur que le moteur a été conçu, construit et équipé selon les lois américaines en vigueur portant sur la pollution et qu'il ne comporte aucun défaut de fabrication des composants, ce qui engendrerait une non-conformité du moteur pendant les périodes suivantes: (A) cinq ans ou 3 000 heures

d'utilisation, suivant lequel de ces termes intervient en premier, et à dater de la livraison du moteur à l'acquéreur final ou (B) la garantie de base des moteurs.

Si le véhicule muni du moteur Cummins est enregistré dans l'Etat de Californie, une autre garantie du système antipollution s'applique également.

Limites

Les pannes autres que celles résultant d'un défaut de matériaux ou de main d'oeuvre, ne sont pas garanties.

Cummins décline toute responsabilité en cas de pannes ou de détériorations résultant de ce que Cummins considère comme un abus ou une négligence de la part du propriétaire, notamment et non limitativement: une utilisation sans les lubrifiants ou les liquides de refroidissement appropriés; surremplissage de carburant; vitesse trop élevée; négligence d'entretien des systèmes d'admission, de refroidissement ou de lubrification; mauvaises conditions d'entreposage, pratiques inappropriées de démarrage, de chauffage, de rodage ou d'arrêt; modifications non homologuées du moteur. Cummins n'est également pas responsable des pannes provoquées par l'utilisation d'une huile, d'un carburant ou d'une eau non appropriés, ainsi que des pannes provoquées par la présence de dépôts dans le carburant ou dans l'huile.

Cummins n'est pas responsable des réparations autres que celles du moteur, des dépenses de temps mort, des dommages au chargement, des amendes, de toutes les taxes en vigueur, de tous les coûts commerciaux et de toute autre dépense résultant d'une panne sous garantie.

CUMMINS N'EST PAS RESPONSABLE DES DOMMAGES INDIRECTS OU INDUITS

*Doivent être pris en compte l'archipel américain Samoa, le Commonwealth des îles Mariana du nord, les îles Guam, Porto Rico et les îles américaines Vierges.

** Les alternateurs, les démarreurs et les ventilateurs SONT couverts pendant la durée de la garantie de base des moteurs B3.3.

B5.9 & C8.3 Engines United States and Canada Recreational Vehicle

Coverage

Products Warranted

This warranty applies to new B5.9 and C8.3 series diesel Engines sold by Cummins Engine Company, Inc., hereafter ''Cummins'', and delivered to the first user on or after March 15, 1998, that are used in recreational vehicle* applications in the United States** or Canada.

Base Engine Warranty

The Base Engine Warranty covers any failures of the Engine which result, under normal use and service, from a defect in material or factory workmanship (Warrantable Failure). This coverage begins with the sale of the Engine by Cummins and continues for seven years or 150,000 miles (241,400 kilometers), whichever occurs first, from the date of delivery of the Engine to the first user.

Emission Warranty

Additional coverage is outlined in the Emission Warranty on the back page.

Consumer Products

This warranty on Consumer Products in the United States is a **LIMITED** warranty. **CUMMINS IS NOT RESPONSIBLE FOR INCIDENTAL OR CONSEQUENTIAL DAMAGES.** Any implied warranties applicable to Consumer Products in the United States terminate concurrently with the expiration of the express warranties applicable to such products. In the United States, some states do not allow the exclusion of incidental or consequential damages, or limitations on how long an implied warranty lasts, so the limitations or exclusions herein may not apply to you.

These warranties are made to all Owners in the chain of distribution, and Coverage continues to all subsequent Owners until the end of the periods of Coverage.

Cummins Responsibilities

During The Base Engine Warranty

Cummins will pay for all parts and labor needed to repair the damage to the Engine resulting from a Warrantable Failure.

Cummins will pay for the lubricating oil, antifreeze, filter elements, belts, hoses and other maintenance items that are not reusable due to the Warrantable Failure.

Cummins will pay for reasonable labor costs for Engine removal and reinstallation when necessary to repair a Warrantable Failure.

Cummins will pay reasonable costs for towing a vehicle disabled by a Warrantable Failure to the nearest authorized repair location when necessary to make the repair for the first year from the date of delivery of the Engine to the first user. In lieu of towing expenses, Cummins will pay reasonable costs for mechanics to travel to and from the location of the vehicle, including meals, mileage, and lodging, when the repair is performed at the site of the failure.

Owner Responsibilities

During The Base Engine Warranty

Owner is responsible for the cost of lubricating oil, antifreeze, filter elements and other maintenance items provided during warranty repairs unless such items are not reusable due to the Warrantable Failure.

Owner is responsible for the operation and maintenance of the Engine as specified in the applicable Cummins Operation and Maintenance Manual. Owner is also responsible for providing proof that all recommended maintenance has been performed.

Before the expiration of the applicable warranty, Owner must notify a Cummins distributor, authorized dealer or other repair location approved by Cummins of any Warrantable Failure and make the Engine available for repair by such facility. Except for Engines disabled by a Warrantable Failure during the first year from the date of delivery of the Engine to the first user, Owner must also deliver the Engine to the repair facility. Locations in the United States and Canada are listed in the Cummins United States and Canada Sales and Service Directory.

Owner is responsible for communication expenses, meals, lodging and similar costs incurred as a result of a Warrantable Failure.

Owner is responsible for non-Engine repairs and for ''downtime'' expenses, passenger delays, fines, all applicable taxes, all business costs and other losses resulting from a Warrantable Failure.

Limitations

Cummins is not responsible for failures or damage resulting from what Cummins determines to be abuse or neglect, including but not limited to: operation without adequate coolants or lubricants; overfueling; overspeeding; lack of maintenance of lubricating, cooling or intake systems; improper storage, starting, warm-up, run-in or shutdown practices; unauthorized modifications of the Engine. Cummins is also not responsible for failures caused by incorrect oil or fuel or by water, dirt or other contaminants in the fuel or oil.

This warranty does not apply to accessories which bear the name of another company. This category includes, but is not limited to: alternators, starters, fans, air conditioning compressors, clutches, filters, transmissions, torque converters, vacuum pumps, power steering pumps and air compressors. Cummins branded alternators and starters are covered for the first two years from the date of delivery of the Engine to the first user, or the expiration of the Base Engine Warranty, whichever occurs first.

Excessive oil consumption for B series Engines is covered for the duration of the coverage or 150,000 miles (241,400 km) or 10,000 hours from the date of delivery of the Engine to the first user, whichever of the three occurs first. Before a claim for excessive oil consumption will be considered, Owner must submit adequate documentation to show that consumption exceeds Cummins published standards.

Failures of belts and hoses supplied by Cummins are not covered beyond the first 12 months from the date of delivery of the Engine to the first user or the expiration of the applicable Base Warranty, whichever occurs first.

Parts used to repair a Warrantable Failure may be new Cummins parts, Cummins approved rebuilt parts, or repaired parts. Cummins is not responsible for failures resulting from the use of parts not approved by Cummins.

A new Cummins or Cummins approved rebuilt part used to repair a Warrantable Failure assumes the identity of the part it replaced and is entitled to the remaining coverage hereunder.

CUMMINS DOES NOT COVER WEAR OR WEAROUT OF COVERED PARTS.

CUMMINS IS NOT RESPONSIBLE FOR INCIDENTAL OR CONSEQUENTIAL DAMAGES.

THESE WARRANTIES AND THE EMISSION WARRANTY SET FORTH HEREINAFTER ARE THE SOLE WARRANTIES MADE BY CUMMINS IN REGARD TO THESE ENGINES. CUMMINS MAKES NO OTHER WARRANTIES, EXPRESS OR IMPLIED, OR OF MERCHANTABILITY OR FITNESS FOR A PARTICULAR PURPOSE.

This warranty gives you specific legal rights, and you may also have other rights which vary from state to state.

Emission Warranty

Products Warranted

This emission warranty applies to new Engines marketed by Cummins that are used in the United States* in vehicles designed for transporting persons or property on a street or highway. This warranty applies to Engines delivered to the ultimate purchaser on or after January 1, 1998.

Coverage

Cummins warrants to the ultimate purchaser and each subsequent purchaser that the Engine is designed, built and equipped so as to conform at the time of sale by Cummins with all U.S. Federal emission regulations applicable at the time of manufacture and that it is free from defects in material or factory workmanship which would cause it not to meet these regulations within the longer of the following periods: (A) Five years or 100,000 miles (160,935 kilometers) of operation, whichever occurs first, as measured from the date of delivery of the Engine to the ultimate purchaser, or (B) The Base Engine Warranty.

If the vehicle in which the Engine is installed is registered in the state of California, a separate California Emission Warranty also applies.

Limitations

Failures, other than those resulting from defects in material or factory workmanship, are not covered by this warranty.

Cummins is not responsible for failures or damage resulting from what Cummins determines to be abuse or neglect, including, but not limited to: operation without adequate coolants or lubricants; overfueling; overspeeding; lack of maintenance of lubricating, cooling or intake systems; improper storage, starting, warm-up, run-in or shutdown practices; unauthorized modifications of the Engine. Cummins is also not responsible for failures caused by incorrect oil or fuel or by water, dirt or other contaminants in the fuel or oil.

Cummins is not responsible for non-Engine repairs, ''downtime'' expenses, cargo damage, fines, all applicable taxes, all business costs or other losses resulting from a Warrantable Failure.

CUMMINS IS NOT RESPONSIBLE FOR INCIDENTAL OR CONSEQUENTIAL DAMAGES.

* A 'recreational vehicle' for this warranty is defined as a Class A Motorhome which is a vehicular unit built on a self-propelled motor vehicle chassis, primarily designed or altered to provide temporary living quarters for recreational, travel or camping use. The living unit has been entirely constructed on a bare, specially-designed motor vehicle chassis.

** Includes American Samoa, the Commonwealth of Northern Mariana Islands, Guam, Puerto Rico, and the U.S. Virgin Islands.

United States and Canada Diesel Engine School Bus

Coverage

Products Warranted

This warranty applies to new diesel Engines sold by Cummins Engine Company, Inc., hereafter "Cummins", and delivered to the first user on or after September 15, 1996, that are used in school bus* applications in the United States** or Canada.

Base Engine Warranty

The Base Engine Warranty covers any failures of the Engine which result, under normal use and service, from a defect in material or factory workmanship (Warrantable Failure). This coverage begins with the sale of the Engine by Cummins and continues for five years or 100,000 miles (160,935 kilometers), whichever occurs first, from the date of delivery of the Engine to the first user.

Extended Major Components Warranty

The Extended Major Components Warranty applies to all except B and ISB series Engines and covers Warrantable Failures of the engine cylinder block, camshaft, crankshaft, connecting rods and Cummins fan clutch (Covered Parts).

Bushing and bearing failures are not covered.

This coverage begins with the expiration of the Base Engine Warranty and ends three years or 300,000 miles (482,805 kilometers), whichever occurs first, from the date of delivery of the Engine to the first user.

Emission Warranty

Additional coverage is outlined in the Emission Warranty on the back page.

Consumer Products

This warranty on Consumer Products in the United States is a **LIMITED** warranty. **CUMMINS IS NOT RESPONSIBLE FOR INCIDENTAL OR CONSEQUENTIAL DAMAGES.** Any implied warranties applicable to Consumer Products in the United States terminate concurrently with the expiration of the express warranties applicable to such products. In the United States, some states do not allow the exclusion of incidental or consequential damages, or limitations on how long an implied warranty lasts, so the limitations or exclusions herein may not apply to you.

THESE WARRANTIES ARE MADE TO ALL OWNERS IN THE CHAIN OF DISTRIBUTION, AND COVERAGE CONTINUES TO ALL SUBSEQUENT OWNERS UNTIL THE END OF THE PERIODS OF COVERAGE.

Cummins Responsibilities

During The Base Engine Warranty

Cummins will pay for all parts and labor needed to repair the damage to the Engine resulting from a Warrantable Failure.

Cummins will pay for the lubricating oil, antifreeze, filter elements, belts, hoses and other maintenance items that are not reusable due to the Warrantable Failure.

Cummins will pay for reasonable labor costs for Engine removal and reinstallation when necessary to repair a Warrantable Failure.

Cummins will pay reasonable costs for towing a vehicle disabled by a Warrantable Failure to the nearest authorized repair location when necessary to make the repair for the first 2 years from the date of delivery of the Engine to the first user. In lieu of towing expenses, Cummins will pay reasonable costs for mechanics to travel to and from the location of the vehicle, including meals, mileage, and lodging, when the repair is performed at the site of the failure.

During The Extended Major Components Warranty

Cummins will pay for the repair or, at its option, replacement of the defective Covered Part and any Covered Part damaged by a Warrantable Failure of the defective Covered Part.

Owner Responsibilities

During The Base Engine Warranty

Owner is responsible for the cost of lubricating oil, antifreeze, filter elements and other maintenance items provided during warranty repairs unless such items are not reusable due to the Warrantable Failure.

During The Extended Major Components Warranty

Owner is responsible for the cost of all labor needed to repair the Engine, including the labor to remove and reinstall the Engine. When Cummins elects to repair a part instead of replacing it, Owner is not responsible for the labor needed to repair the part.

Owner is responsible for the cost of all parts required for the repair except for the defective Covered Part and any Covered Part damaged by a Warrantable Failure of the defective Covered Part.

Owner is responsible for the cost of lubricating oil, antifreeze, filter elements and other maintenance items replaced during the repair.

During The Base Engine and Extended Major Components Warranties

Owner is responsible for the operation and maintenance of the Engine as specified in the applicable Cummins Operation and Maintenance Manual. Owner is also responsible for providing proof that all recommended maintenance has been performed.

Before the expiration of the applicable warranty, Owner must notify a Cummins distributor, authorized dealer or other repair location approved by Cummins of any Warrantable Failure and make the Engine available for repair by such facility. Except for Engines disabled by a Warrantable Failure during the first year from the date of delivery of the Engine to the first user, Owner must also deliver the Engine to the repair facility. Locations in the United States and Canada are listed in the Cummins United States and Canada Sales and Service Directory.

Owner is responsible for communication expenses, meals, lodging and similar costs incurred as a result of a Warrantable Failure.

Owner is responsible for non-Engine repairs and for ''downtime'' expenses, passenger delays, fines, all applicable taxes, all business costs and other losses resulting from a Warrantable Failure.

Limitations

Cummins is not responsible for failures or damage resulting from what Cummins determines to be abuse or neglect, including but not limited to: operation without adequate coolants or lubricants; overfueling; overspeeding; lack of maintenance of lubricating, cooling or intake systems; improper storage, starting, warm-up, run-in or shutdown practices; unauthorized modifications of the Engine. Cummins is also not responsible for failures caused by incorrect oil or fuel or by water, dirt or other contaminants in the fuel or oil.

This warranty does not apply to accessories which bear the name of another company. This category includes, but is not limited to: alternators, starters, fans, air conditioning compressors, clutches, filters, transmissions, torque converters, vacuum pumps, power steering pumps and air compressors. Cummins branded alternators and starters are covered for the first two years from the date of delivery of the Engine to the first user, or the expiration of the Base Engine Warranty, whichever occurs first.

Excessive oil consumption for B series Engines is covered for the duration of the coverage or 100,000 miles (160,935 kilometers) or 7000 hours from the date of delivery of the Engine to the first user, whichever of the three occurs first. Before a claim for excessive oil consumption will be considered, Owner must submit adequate documentation to show that consumption exceeds Cummins published standards.

Failures of belts and hoses supplied by Cummins are not covered beyond the first year from the date of delivery of the Engine to the first user or the expiration of the applicable Base Warranty, whichever occurs first.

Parts used to repair a Warrantable Failure may be new Cummins parts, Cummins approved rebuilt parts, or repaired parts. Cummins is not responsible for failures resulting from the use of parts not approved by Cummins.

A new Cummins or Cummins approved rebuilt part used to repair a Warrantable Failure assumes the identity of the part it replaced and is entitled to the remaining coverage hereunder.

CUMMINS DOES NOT COVER WEAR OR WEAROUT OF COVERED PARTS.

CUMMINS IS NOT RESPONSIBLE FOR INCIDENTAL OR CONSEQUENTIAL DAMAGES.

THESE WARRANTIES AND THE EMISSION WARRANTY SET FORTH HEREINAFTER ARE THE SOLE WARRANTIES MADE BY CUMMINS IN REGARD TO THESE ENGINES. CUMMINS MAKES NO OTHER WARRANTIES, EXPRESS OR IMPLIED, OR OF MERCHANTABILITY OR FITNESS FOR A PARTICULAR PURPOSE.

This warranty gives you specific legal rights, and you may also have other rights which vary from state to state.

Emission Warranty

Products Warranted

This emission warranty applies to new Engines marketed by Cummins that are used in the United States* in vehicles designed for transporting persons or property on a street or highway. This warranty applies to Engines delivered to the ultimate purchaser on or after January 1, 1996.

Coverage

Cummins warrants to the ultimate purchaser and each subsequent purchaser that the Engine is designed, built and equipped so as to conform at the time of sale by Cummins with all U.S. Federal emission regulations applicable at the time of manufacture and that it is free from defects in material or factory workmanship which would cause it not to meet these regulations within the longer of the following periods: (A) Five years or 100,000 miles (160,935 kilometers) of operation, whichever occurs first, as measured from the date of delivery of the Engine to the ultimate purchaser, or (B) The Base Engine Warranty.

If the vehicle in which the Engine is installed is registered in the state of California, a separate California Emission Warranty also applies.

Limitations

Failures, other than those resulting from defects in material or factory workmanship, are not covered by this warranty.

Cummins is not responsible for failures or damage resulting from what Cummins determines to be abuse or neglect, including, but not limited to: operation without adequate coolants or lubricants; overfueling; overspeeding; lack of

maintenance of lubricating, cooling or intake systems; improper storage, starting, warm-up, run-in or shutdown practices; unauthorized modifications of the Engine. Cummins is also not responsible for failures caused by incorrect oil or fuel or by water, dirt or other contaminants in the fuel or oil.

Cummins is not responsible for non-Engine repairs, ''downtime'' expenses, cargo damage, fines, all applicable taxes, all business costs or other losses resulting from a Warrantable Failure.

CUMMINS IS NOT RESPONSIBLE FOR INCIDENTAL OR CONSEQUENTIAL DAMAGES.

* A vehicle used to transport students to and from school and school-related events. Vehicle must have warning lights and the words ''SCHOOL BUS'' written on the front and rear roof caps.

** Includes American Samoa, the Commonwealth of Northern Mariana Islands, Guam, Puerto Rico, and the U.S. Virgin Islands.

California Emission Control System Warranty, On-Highway

Products Warranted

This Emission Control System Warranty applies to heavy duty diesel engines (hereafter, engines) certified with the California Air Resources Board beginning with the year 1991, marketed by Cummins, and registered in California for use in automotive on-highway applications.

Your Warranty Rights and Obligations

The California Air Resources Board and Cummins Engine Company, Inc., are pleased to explain the emission control system warranty on your 1992 and subsequent model year heavy duty diesel engine. In California, new motor vehicle engines must be designed, built and equipped to meet the State's stringent anti-smog standards. Cummins must warrant the emission control system on your heavy duty diesel engine for the periods of time listed below provided there has been no abuse, neglect or improper maintenance of your heavy duty diesel engine.

Your emission control system may include parts such as the fuel injection system and engine electronic control module. Also included may be hoses, connectors and other emission-related assemblies.

If an emission-related part on your engine is found to have a defect in material or factory workmanship (Warrantable Condition), the part will be repaired or replaced by Cummins. This is your emission control system defects warranty.

Manufacturer's Warranty Coverage

This warranty coverage is provided for five years or 160,935 km [100,000 miles] or 3,000 hours of engine operation, whichever first occurs from the date of delivery of the engine to the first user.

Where a Warrantable Condition exists, Cummins will repair your engine at no cost to you including diagnosis, parts and labor.

Owner's Warranty Responsibilities

As the engine owner, you are responsible for the performance of the required maintenance listed in your Cummins Operation and Maintenance Manual. Cummins recommends that you retain all receipts covering maintenance on your engine, but Cummins cannot deny warranty solely for the lack of receipts or for your failure to substantiate the performance of all scheduled maintenance.

You are responsible for presenting your engine to a Cummins dealer as soon as a problem exists. The warranty repairs should be completed in a reasonable amount of time, not to exceed 30 days.

As the engine owner, you should also be aware that Cummins may deny you warranty coverage if your engine or a part has failed due to abuse, neglect, improper maintenance or unapproved modifications.

If you have any questions regarding your warranty rights and responsibilities, you should contact Cummins Customer Relation Department at 1-800-343-7357 or the California Air Resources Board at 9528 Telstar Avenue, El Monte, CA 91731.

A warranted part which is scheduled for replacement as required maintenance is warranted up to the first scheduled replacement point.

Prior to the expiration of the applicable warranty, Owner must give notice of any warranted emission control failure to a Cummins distributor, authorized dealer or other repair location approved by Cummins and deliver the engine to such facility for repair. Repair locations are listed in Cummins United States and Canada Service Directory.

Owner is responsible for incidental costs such as: communication expenses, meals, lodging incurred by Owner or employees of Owner as a result of a Warrantable Condition.

Owner is responsible for ''downtime'' expenses, cargo damage, fines, all applicable taxes, all business costs, and other losses resulting from a Warrantable Condition.

CUMMINS IS NOT RESPONSIBLE FOR OTHER INCIDENTAL OR CONSEQUENTIAL DAMAGES. INCIDENTAL OR CONSEQUENTIAL DAMAGES INCLUDE BUT ARE NOT LIMITED TO FINES, THEFT, VANDALISM OR COLLISIONS.

Replacement Parts

Cummins recommends that any service parts used for maintenance, repair or replacement of emission control systems be new, genuine Cummins or Cummins approved rebuilt parts and assemblies, and that the engine be serviced by a Cummins distributor, authorized dealer or the repair location approved by Cummins. The owner may elect to have maintenance, replacement or repair of the emission control parts performed by a facility other than a Cummins distributor, an authorized dealer or a repair location approved by Cummins, and may elect to use parts other than new genuine Cummins or Cummins approved rebuilt parts and assemblies for such maintenance, replacement or repair; however, the cost of such service or parts and subsequent failures resulting from such service or parts will not be covered under this emission control system warranty, except for Emergency Repairs as described below.

Cummins Responsibilities

The warranty coverage begins when the engine is delivered to the ultimate purchaser.

Repairs and service will be performed by any Cummins distributor, authorized dealer or other repair location approved by Cummins using new, genuine Cummins or Cummins approved rebuilt parts and assemblies. Cummins will repair any of the emission control parts found by Cummins to be defective without charge for parts or labor (including diagnosis which results in determination that there has been a failure of a warranted emission control part).

Emergency Repairs

In the case of an emergency where a Cummins distributor, authorized dealer, or other repair location approved by Cummins is not available, repairs may be performed by any available repair location or by any individual using any replacement parts. A part not being available within 30 days or a repair not being complete within 30 days constitutes an emergency. Cummins will reimburse the Owner for expenses (including diagnosis), not to exceed the manufacturer's suggested retail price for all warranted parts replaced and labor charges based on the manufacturer's recommended time allowance for the warranty repair and the geographically appropriate hourly labor rate. Replaced parts and paid invoices must be presented at a Cummins authorized repair facility as a condition of reimbursement for emergency repairs not performed by a Cummins distributor, authorized dealer, or other repair location approved by Cummins.

Warranty Limitations

Cummins is not responsible for failures or damage resulting from what Cummins determines to be abuse or neglect, including, but not limited to: operation without adequate coolants or lubricants; overfueling; overspeeding; lack of maintenance of cooling, lubricating or intake systems; improper storage, starting, warm-up, run-in or shutdown practices; unauthorized modifications to the engine. Cummins is also not responsible for failures caused by incorrect oil or fuel or by water, dirt or other contaminants in the fuel or oil.

Cummins is not responsible for failures resulting from improper repair or the use of parts which are not genuine Cummins or Cummins approved parts.

Cummins is not responsible for the material and labor costs of emission control parts and assemblies replaced during Scheduled Maintenance of the engine as specified in Cummins Operation and Maintenance Manuals.

THIS WARRANTY, TOGETHER WITH THE EXPRESS COMMERCIAL WARRANTIES ARE THE SOLE WARRANTIES MADE BY CUMMINS. THERE ARE NO OTHER WARRANTIES, EXPRESS OR IMPLIED, OR OF MERCHANTABILITY OR FITNESS FOR A PARTICULAR PURPOSE.

NOTES

About the Manual i-2
General Information i-2
Acronyms and Abbreviations i-8
General Information i-8
Additional Service Literature L-1
General Information L-1
Aftercooler A-76
Clean A-78
Fill A-79
Install A-78
Preparatory A-76
Remove A-76
Air Cleaner Restriction 4-11
Maintenance Check 4-11
Air Compressor 7-9
Inspect 7-9
Air Crossover A-75
Install A-75
Remove A-75
Air Intake Manifold A-81
Clean A-82
Install A-83
Preparatory A-81
Pressure Test A-85
Remove A-82
Temperature Differential Test A-85
Vent A-84
Air Intake Piping 4-7
Inspect for Reuse 4-7
Air Intake System - Overview A-74
General Information A-74
All Bus Categories Worldwide (Except U.S./Canada Diesel Powered School Buses) W-7
Alternator A-112
Install A-113
Remove A-112
Arctic Operation V-27
Preparatory V-27
B5.9 & C8.3 Engines United States and Canada Recreational Vehicle W-25
Belt Tensioner, Automatic A-4
Install A-5
Remove A-4
B/ISB Engines United States and Canada Automotive W-1
California Emission Control System Warranty, On-Highway W-36
Capscrew Markings and Torque Values V-32
Capscrew Markings and Torque Values - Metric V-33
Capscrew Markings and Torque Values - U.S. Customary V-34
General Information V-32
Charge-Air Cooler (CAC) 4-8
Clean 4-9
Inspect for Reuse 4-8
Leak Test A-80
Pressure Test A-81
Cold Start Timing Advance System (KSB) Temperature Switch A-45
Install A-45
Remove A-45
Cold Weather Operation 1-8
Operating Aids 1-8
Shutters 1-9
Winterfronts 1-9
Cold Weather Starting Aids 1-10
Ether Starting Aids 1-11
Grid Heater 1-12
With Mechanical or Electrical Metering Equipment (Ether) 1-10
Component Manufacturers' Addresses M-1
Air Compressors M-1
Air Cylinders M-1
Air Heaters M-1
Air Starting Motors M-1

Index
Page 2

Alternators M-2
Auxiliary Brakes M-2
Belts M-2
Catalytic Converters M-3
Clutches M-3
Coolant Heaters M-3
Coolant Level Switches M-3
Drive Plates M-3
Electric Starting Motors M-3
Electronic Switches M-4
Engine Protection Controls M-4
Fan Clutches M-4
Fans M-4
Fault Lamps M-4
Filters M-5
Flexplates M-5
Fuel Coolers M-5
Fuel Pumps M-5
Fuel Warmers M-5
Gauges M-5
General Information M-1
Governors M-6
Heat Sleeves M-6
Hydraulic and Power Steering Pumps M-6
In-Line Connectors M-6
Oil Heaters M-7
Prelubrication Systems M-7
Radiators M-7
Throttle Assemblies M-7
Torque Converters M-7
Coolant Level 3-4
Maintenance Check 3-4
Coolant Recommendations and Specifications V-28
Preparatory V-28
Coolant Thermostat A-11
Clean A-13
Fill A-16
Install A-14
Preparatory A-11
Remove A-12
Cooling System 7-2
Drain 7-2
Fill 7-6
Flush 7-4
General Information A-2
Maintenance Check 5-9
Daily Maintenance Procedures - Overview 3-1
General Information 3-1
Drive Belt, Cooling Fan A-3
Install A-3
Remove A-3
Drive Belts 3-7
Maintenance Check 3-7
Test 6-8
Electrical Equipment - Overview A-109
General Information A-109
Engine Component Torque Values V-29
General Information V-29
Engine Diagrams E-27
Engine Views E-27
Engine Identification E-1
Cummins Engine Nomenclature E-3
Engine Dataplate E-1
Fuel Injection Pump Dataplate E-4
Bosch® E-4
CAV E-5
Stanadyne E-5
Engine Operating Range 1-14
General Information 1-14
Engine Shutdown 1-18
General Information 1-18
Exhaust Manifold, Dry A-96

Clean A-97
Install A-98
Preparatory A-96
Remove A-97
Fan, Cooling 3-8
Maintenance Check 3-8
Fan Spacer and Pulley A-5
Install A-6
Remove A-5
Flow Diagram, Air Intake System D-14
General Information D-14
Flow Diagram, Compressed Air System D-26
General Information D-26
Flow Diagram, Cooling System D-12
General Information D-12
Flow Diagram, Exhaust System D-20
General Information D-20
Flow Diagram, Fuel System D-2
General Information D-2
Flow Diagram, Lubricating Oil System D-6
General Information D-6
Fuel Filter Adapter A-22
Preparatory A-22
Remove A-23
Fuel Filter (Spin-On Type) 5-2
Install 5-2
Remove 5-2
Fuel Injection Pump, Rotary A-46
Install A-51
Preparatory A-46
Remove A-47
Fuel Injection Pumps, In-Line A-60
Install A-63
Preparatory A-60
Remove A-60
Fuel Lift Pump A-23
Clean A-24
Install A-25
Preparatory A-23
Fuel Manifold (Drain) A-31
Install A-34
Preparatory A-31
Remove A-31
Fuel Pump A-73
Adjust A-73
Fuel Recommendations and Specifications V-20
Fuel Recommendations V-20
Fuel Shutoff Valve A-41
Clean A-42
Install A-43
Preparatory A-41
Remove A-42
Fuel Supply Lines A-18
Install A-19
Preparatory A-18
Remove A-18
Vent 5-4
Fuel System - Overview A-17
General Information A-17
Fuel-Water Separator 3-2
Maintenance Check 3-2
General Safety Instructions i-6
Important Safety Notice i-6
How to Use the Manual i-3
General Information i-3
Illustrations i-5
General Information i-5
Injector A-36
Clean A-37
Install A-37
Preparatory A-36
Remove A-36

Index
Page 4

Injector Supply Lines (High Pressure) A-26
Install A-29
Preparatory A-26
Remove A-26
Vent 5-7
Lubricating Oil and Filters 4-2
Drain 4-2
Fill 4-5
Install 4-3
Remove 4-3
Lubricating Oil Cooler A-103
Clean A-104
Fill A-108
Install A-106
Preparatory A-103
Pressure Test A-106
Remove A-104
Lubricating Oil Level 3-3
Maintenance Check 3-3
Lubricating Oil Pressure Regulator (Main Rifle) A-100
Clean A-101
Install A-102
Preparatory A-100
Remove A-100
Lubricating Oil Recommendations and Specifications V-25
New Engine Break-in Oils V-25
Lubricating Oil System - Overview A-99
General Information A-99
Maintenance Guidelines - Overview 2-1
General Information 2-1
Maintenance Procedures - Overview 4-1
General Information 4-1
Maintenance Record Form 2-10
General Information 2-10
Maintenance Schedule 2-3
General Information 2-3
Moteurs tout terrain Etats-Unis et Canada W-19
Normal Starting Procedure 1-3
General Information 1-3
Off-Highway Engines United States and Canada W-13
Operating Instructions - Overview 1-1
General Information 1-1
Operating the Engine 1-15
General Information 1-15
Overhead Set 6-2
Adjust 6-2
Page References for Maintenance Instructions 2-8
General Information 2-8
Sealants V-24
General Information V-24
Service Assistance S-1
Distributors and Branches - Australia S-22
Distributors and Branches - Canada S-19
Distributors and Branches - New Zealand S-25
Distributors and Branches - United States S-4
Division and Regional Offices S-3
Emergency and Technical Service S-1
Problem Solving S-2
Routine Service and Parts S-1
Service Literature Ordering Location L-2
General Information L-2
Specifications V-1
Air Intake System ..... V-10 , E-19
Batteries (Specific Gravity) E-26
Cooling System ..... V-8 , E-17
Electrical System ..... V-17 , E-23
Exhaust System ..... V-12 , E-21
Fuel System ..... V-14 , E-11
General Specifications ..... V-1 , E-7
Lubricating Oil System ..... V-5 , E-14
Starting Motor A-110
Install A-111

Remove A-110
Starting Procedure After Extended Shutdown or Oil Change 1-13
General Information 1-13
Symbols i-4
General Information i-4
System Diagrams - Overview D-1
General Information D-1
To the Owner and Operator i-1
General Information i-1
Tool Requirements 2-2
General Information ..... 2-2 , A-1
Troubleshooting Procedures and Techniques TS-1
General Information TS-1
Troubleshooting Symptoms Charts TS-2
Alternator Not Charging or Insufficient Charging TS-3
Coolant Contamination TS-4
Coolant Loss TS-5
Coolant Temperature Above Normal TS-7
Coolant Temperature is Below Normal TS-6
Engine Difficult to Start or Will Not Start (Exhaust Smoke) .. TS-10
Engine Difficult to Start or Will Not Start (No Exhaust Smoke) TS-12
Engine Noise Excessive TS-14
Engine Power Output Low TS-15
Engine Runs Rough at Idle, Warm Engine TS-19
Engine Runs Rough or Misfires TS-21
Engine Speed Surges at Low or High Idle TS-23
Engine Starts But Will Not Keep Running TS-24
Engine Vibration Excessive TS-25
Engine Will Not Crank or Cranks Slowly TS-26
Engine Will Not Reach Rated Speed (RPM) TS-27
Engine Will Not Shut Off TS-29
Exhaust Smoke Excessive Under Load TS-30
Fuel Knock TS-32
Fuel or Lubricating Oil Leaking From Exhaust Manifold TS-33
General Information TS-2
Lubricating Oil Contaminated TS-34
Lubricating Oil Loss TS-35
Lubricating Oil Pressure High TS-37
Lubricating Oil Pressure Low TS-38
Smoke, White — Excessive TS-40
Turbocharger A-86
Clean A-89
Install A-89
Preparatory A-86
Remove A-87
Test A-96
United States and Canada Diesel Engine School Bus W-30
Vibration Damper 7-8
Inspect 7-8
Water Pump A-7
Clean A-9
Install A-10
Preparatory A-7
Remove A-8













NO POSTAGE
NECESSARY
IF MAILED
IN THE
UNITED STATES

BUSINESS REPLY MAIL

FIRST CLASS PERMIT NO. 15, COLUMBUS INDIANA

–POSTAGE WILL BE PAID BY ADDRESSEE—

CUMMINS ENGINE COMPANY, INC.
MAIL CODE 41302
BOX 3005
COLUMBUS, IN 47202-3005

Do not use this form to order additional literature. Refer to Section L - Service Literature for literature information.

Literature Survey Form

Bulletin No.: 3810205-14

We are always open to any suggestions or recommendations that will aid in improving our manuals. Use this postage paid survey form to evaluate this manual. Please check the appropriate response and use the space provided below to list any additional comments:

	Yes	No
Is the needed information easy to locate in the manual?	____	____
Is the information easy to read?	____	____
Is the information easy to understand?	____	____
Does the information sufficiently cover the subject?	____	____
Are subjects in the Index specific enough to locate in the manual?	____	____
Are the important points sufficiently emphasized?	____	____
Are the illustrations easy to understand?	____	____
Does the text support the operation being illustrated?	____	____
Do you use the Table of Contents and Section Contents?	____	____
Do you use the Index?	____	____

Please provide comments on any response(s) marked "No" in this survey and on any suggestions you feel could improve our manuals. _____

_____

_____

_____

_____

_____

Name: _____

Company: _____

Street Address: _____

City: _____ State/Province: _____

Country: _____ Zip/Postal Code: _____

Do not use this form to order additional literature. Refer to Section L - Service Literature for literature information.



NO POSTAGE
NECESSARY
IF MAILED
IN THE
UNITED STATES

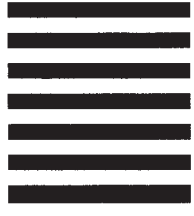

BUSINESS REPLY MAIL

FIRST CLASS PERMIT NO. 15, COLUMBUS INDIANA

–POSTAGE WILL BE PAID BY ADDRESSEE—

CUMMINS ENGINE COMPANY, INC.
MAIL CODE 40905
BOX 3005
COLUMBUS, IN 47202-3005















Customized Parts Catalog Order Form

Customer Name _____

Street _____

City _____ State _____ Zip _____

Company Name (Optional) _____

Telephone _____

Credit Card Number _____ Expires _____

Signature _____

Engine Serial Number _____









