Operation and Maintenance Manual Industrial and Power Generation QSX15 Engines

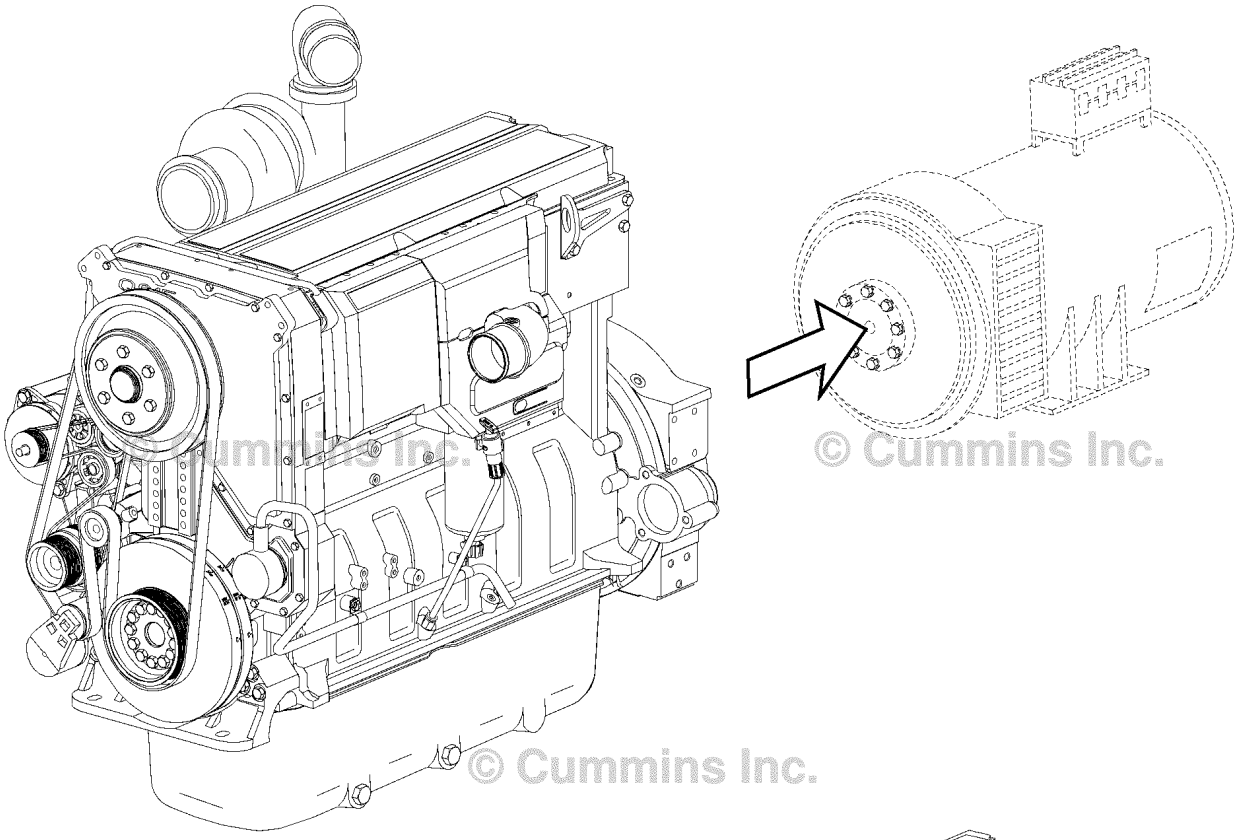

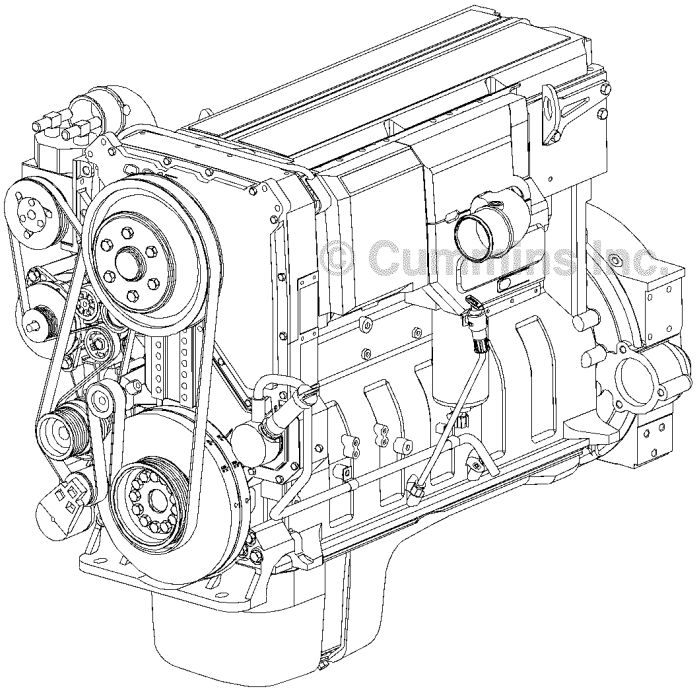

© Cummins Inc.

00c00053

Copyright© 2007
Cummins Inc.
All rights reserved

Bulletin 3666423
Printed 10-AUGUST-2007

Foreword

This manual contains information for the correct operation and maintenance of your Cummins engine. It also includes important safety information, engine and systems specifications, troubleshooting guidelines, and listings of Cummins Authorized Repair Locations and component manufacturers.

Read and follow all safety instructions. Refer to the WARNING in the General Safety Instructions in Section i - Introduction.

Keep this manual with the equipment. If the equipment is traded or sold, give the manual to the new owner.

The information, specifications, and recommended maintenance guidelines in this manual are based on information in effect at the time of printing. Cummins Inc. reserves the right to make changes at any time without obligation. If you find differences between your engine and the information in this manual, contact your local Cummins Authorized Repair Location or call 1-800-DIESELS (1-800-343-7357) toll free in the U.S. and Canada.

The latest technology and the highest quality components were used to produce this engine. When replacement parts are needed, we recommend using only genuine Cummins or ReCon® exchange parts.

NOTE: Note: Warranty information is located in Section W. Make sure you are familiar with the warranty or warranties applicable to your engine.

Table of Contents

	Section
Introduction	i
Engine Identification	E
Operating Instructions	1
Maintenance Guidelines	2
Maintenance Procedures at Daily Interval	3
Maintenance Procedures at 250 Hours or 6 Months	4
Maintenance Procedures at 1500 Hours or 1 Year	5
Maintenance Procedures at 6000 Hours or 2 Years	6
Maintenance Procedures at 10,000 Hours or 5 Years	7
Adjustment, Repair, and Replacement	A
System Diagrams	D
Service Literature	L
Component Manufacturers	M
Service Assistance	S
Troubleshooting Symptoms	TS
Maintenance Specifications	V
Warranty	W
Index	X

Important Reference Numbers

Fill in the part name and number in the blank spaces provided below. This will give you a reference whenever service or maintenance is required.

Name	Number	Number
Engine Model		
Engine Serial Number (ESN)		
Control Parts List (CPL)		
Fuel Pump Part Number		
Electronic Control Module (ECM)		
Electronic Control Module Serial Numbers (ECM)		
Filter Part Numbers:		
• Air Cleaner Element		
• Lubricating Oil		
• Fuel		
• Fuel-Water Separator		
• Coolant		
• Crankcase Ventilation		
• Cummins Particulate Filter		
Governor Control Module (GCM) (if applicable)		
Belt Part Numbers:		
•		
•		
•		
Clutch or Marine Gear (if applicable):		
• Model		
• Serial Number		
• Part Number		
• Oil Type		
• Sea Water Pump		
- Model		
- Part Number		

Section i - Introduction

Section Contents

Page
About the Manual i-2
General Information i-2
Acronyms and Abbreviations i-14
General Information i-14
General Cleaning Instructions i-9
Abrasive Pads and Abrasive Paper i-9
Definition of Clean i-9
Fuel System i-12
Gasket Surfaces i-10
Plastic Bead Cleaning i-11
Solvent and Acid Cleaning i-10
Steam Cleaning i-11
General Repair Instructions i-8
General Information i-8
Welding on a Vehicle with an Electronic Controlled Fuel System i-8
General Safety Instructions i-6
Important Safety Notice i-6
How to Use the Manual i-3
General Information i-3
Illustrations i-5
General Information i-5
Symbols i-4
General Information i-4
To the Owner and Operator i-1
General Information i-1

This Page Left Intentionally Blank

To the Owner and Operator

General Information

Preventive maintenance is the easiest and least expensive type of maintenance. Follow the maintenance schedule recommendations outlined in Maintenance Guidelines (Section 2).

Keep records of regularly scheduled maintenance.

Use the correct fuel, lubricating oil, and coolant in your engine as specified in Maintenance Specifications (Section V). Blending engine oil with fuel is prohibited for engines with an aftertreatment system.

Cummins Inc. uses the latest technology and the highest quality components to produce its engines. Cummins Inc. recommends using genuine Cummins new parts and ReCon® exchange parts.

Personnel at Cummins Authorized Repair Locations have been trained to provide expert service and parts support. If you have a problem that can **not** be resolved by a Cummins Authorized Repair Location, follow the steps outlined in the Service Assistance (Section S).

Product coverage, warranty limitations and owner responsibilities are available in Warranty (Section W).

⚠CAUTION⚠

Disconnect both the positive (+) and negative (-) battery cables from the battery before welding on the vehicle. Attach the welder ground cable no more than 0.61 meters [2 feet] from the part being welded. Do not connect the ground cable of the welder to the ECM cooling plate or ECM. Welding on the engine or engine mounted components is not recommended.

About the Manual

General Information

This manual contains information needed to correctly operate and maintain your engine as recommended by Cummins Inc. For additional service literature and ordering locations, refer to Service Literature (Section L).

This manual does **not** cover vehicle, vessel, or equipment maintenance procedures. Consult the original vehicle, vessel, or equipment manufacturer for specific maintenance recommendations.

Both metric and U.S. customary values are listed in this manual. The metric value is listed first, followed by the U.S. customary in brackets.

Numerous illustrations and symbols are used to aid in understanding the meaning of the text. Refer to Symbols in this section for a complete listing of symbols and their definitions.

Each section of the manual is preceded by a Section Contents to aid in locating information.

How to Use the Manual

General Information

This manual is organized according to intervals at which maintenance on your engine is to be performed. A maintenance schedule, that states the required intervals and maintenance checks, is located in Maintenance Guidelines (Section 2). Locate the interval at which you are performing maintenance; then follow the steps given in that section for all the procedures to be performed.

Keep a record of all the checks and inspections made. A maintenance record form is located in Maintenance Guidelines (Section 2).

Engine troubleshooting procedures for your engine are located in Troubleshooting Symptoms (Section TS).

Specifications for your engine are located in Maintenance Specifications (Section V).

Symbols

General Information

The following symbols have been used in this manual to help communicate the intent of the instructions. When one of the symbols appears, it conveys the meaning defined below:



WARNING - Serious personal injury or extensive property damage can result if the warning instructions are **not** followed.



CAUTION - Minor personal injury can result or a part, an assembly, or the engine can be damaged if the caution instructions are **not** followed.



Indicates a **REMOVAL or DISASSEMBLY** step.



Indicates an **INSTALLATION or ASSEMBLY** step.



INSPECTION is required.



CLEAN the part or assembly.



PERFORM a mechanical or time **MEASUREMENT**.



LUBRICATE the part or assembly.



Indicates that a **WRENCH or TOOL SIZE** will be given.



TIGHTEN to a specific torque.



PERFORM an electrical **MEASUREMENT**.



Refer to another location in this manual or another publication for additional information.



The component weighs 23 kg [50 lb] or more. To avoid personal injury, use a hoist or get assistance to lift the component.

17800009

© Cummins Inc.

Illustrations

General Information

Some of the illustrations throughout this manual are generic and will **not** look exactly like the engine or parts used in your application. The illustrations can contain symbols to indicate an action required and an acceptable or **not** acceptable condition.

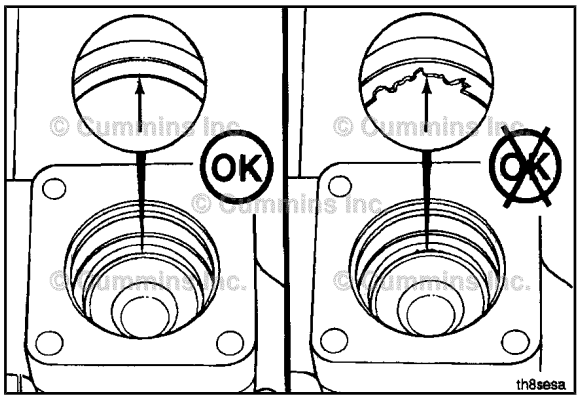

The illustrations are intended to show repair or replacement procedures. The procedure will be the same for all applications, although the illustration can differ.

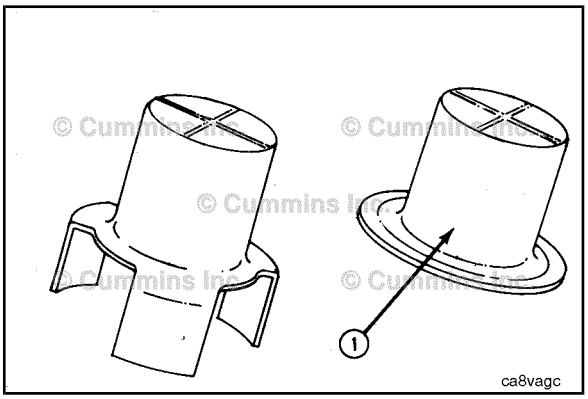

General Safety Instructions

Important Safety Notice

⚠ WARNING ⚠

Improper practices, carelessness, or ignoring the warnings can cause burns, cuts, mutilation, asphyxiation or other personal injury or death.

Read and understand all of the safety precautions and warnings before performing any repair. This list contains the general safety precautions that **must** be followed to provide personal safety. Special safety precautions are included in the procedures when they apply.

- Work in an area surrounding the product that is dry, well lit, ventilated, free from clutter, loose tools, parts, ignition sources and hazardous substances. Be aware of hazardous conditions that can exist.
- **Always** wear protective glasses and protective shoes when working.
- Rotating parts can cause cuts, mutilation or strangulation.
- Do **not** wear loose-fitting or torn clothing. Remove all jewelry when working.
- Disconnect the battery (negative [-] cable first) and discharge any capacitors before beginning any repair work. Disconnect the air starting motor if equipped to prevent accidental engine starting. Put a "Do **Not** Operate" tag in the operator's compartment or on the controls.
- Use ONLY the proper engine barring techniques for manually rotating the engine. Do **not** attempt to rotate the crankshaft by pulling or prying on the fan. This practice can cause serious personal injury, property damage, or damage to the fan blade(s) causing premature fan failure.
- If an engine has been operating and the coolant is hot, allow the engine to cool before slowly loosening the filler cap to relieve the pressure from the cooling system.
- **Always** use blocks or proper stands to support the product before performing any service work. Do **not** work on anything that is supported ONLY by lifting jacks or a hoist.
- Relieve all pressure in the air, oil, fuel, and cooling systems before any lines, fittings, or related items are removed or disconnected. Be alert for possible pressure when disconnecting any device from a system that utilizes pressure. Do **not** check for pressure leaks with your hand. High pressure oil or fuel can cause personal injury.
- To reduce the possibility of suffocation and frostbite, wear protective clothing and ONLY disconnect liquid refrigerant (Freon) lines in a well ventilated area. To protect the environment, liquid refrigerant systems **must** be properly emptied and filled using equipment that prevents the release of refrigerant gas (fluorocarbons) into the atmosphere. Federal law requires capturing and recycling refrigerant.
- To reduce the possibility of personal injury, use a hoist or get assistance when lifting components that weigh 23 kg [50 lb] or more. Make sure all lifting devices such as chains, hooks, or slings are in good condition and are of the correct capacity. Make sure hooks are positioned correctly. **Always** use a spreader bar when necessary. The lifting hooks **must not** be side-loaded.
- Corrosion inhibitor, a component of SCA and lubricating oil, contains alkali. Do **not** get the substance in eyes. Avoid prolonged or repeated contact with skin. Do **not** swallow internally. In case of contact, immediately wash skin with soap and water. In case of contact, immediately flood eyes with large amounts of water for a minimum of 15 minutes. IMMEDIATELY CALL A PHYSICIAN. KEEP OUT OF REACH OF CHILDREN.
- Naptha and Methyl Ethyl Ketone (MEK) are flammable materials and **must** be used with caution. Follow the manufacturer's instructions to provide complete safety when using these materials. KEEP OUT OF REACH OF CHILDREN.
- To reduce the possibility of burns, be alert for hot parts on products that have just been turned off, exhaust gas flow, and hot fluids in lines, tubes, and compartments.
- **Always** use tools that are in good condition. Make sure you understand how to use the tools before performing any service work. Use ONLY genuine Cummins or Cummins ReCon® replacement parts.
- **Always** use the same fastener part number (or equivalent) when replacing fasteners. Do **not** use a fastener of lesser quality if replacements are necessary.
- Do **not** perform any repair when fatigued or after consuming alcohol or drugs that can impair your functioning.
- Some state and federal agencies in the United States of America have determined that used engine oil can be carcinogenic and can cause reproductive toxicity. Avoid inhalation of vapors, ingestion, and prolonged contact with used engine oil.
- Liquified petroleum gas is heavier than air and can accumulate near the floor, in sumps, and low-lying areas.
- Natural gas is lighter than air and can accumulate under hood and awnings.
- To reduce the possibility of suffocation and frostbite, wear protective clothing and ONLY disconnect natural gas and liquified petroleum gas lines in a well ventilated area.
- Coolant is toxic. If **not** reused, dispose of in accordance with local environmental regulations.
- The catalyst reagent contains urea. Do not get the substance in your eyes. In Case of contact, immediately flood eyes with large amounts of water for a minimum of 15 minutes. Avoid prolonged contact with skin. In case of contact, immediately wash skin with soap and water. Do not swallow internally. In the event the catalyst reagent is ingested, contact a physician immediately.

- The catalyst substrate contains Vanadium Pentoxide. Vanadium Pentoxide has been determined by the State of California to cause cancer. Always wear protective gloves and eye protection when handling the catalyst assembly. Do not get the catalyst material in your eyes. In Case of contact, immediately flood eyes with large amounts of water for a minimum of 15 minutes. Avoid prolonged contact with skin. In case of contact, immediately wash skin with soap and water.
- The Catalyst substrate contains Vanadium Pentoxide. Vanadium Pentoxide has been determined by the State of California to cause cancer. In the event the catalyst is being replaced, dispose of in accordance with local regulations.
- California Proposition 65 Warning - Diesel engine exhaust and some of its constituents are known to the State of California to cause cancer, birth defects, and other reproductive harm.

General Repair Instructions

General Information

This engine incorporates the latest technology at the time it was manufactured; yet, it is designed to be repaired using normal repair practices performed to quality standards.

- **Cummins Inc. does not recommend or authorize any modifications or repairs to engines or components except for those detailed in Cummins Service Information. In particular, unauthorized repair to safety-related components can cause personal injury or death. Below is a partial listing of components classified as safety-related:**

1. **Air Compressor**
2. **Air Controls**
3. **Air Shutoff Assemblies**
4. **Balance Weights**
5. **Cooling Fan**
6. **Fan Hub Assembly**
7. **Fan Mounting Bracket(s)**
8. **Fan Mounting Capscrews**
9. **Fan Hub Spindle**
10. **Flywheel**
11. **Flywheel Crankshaft Adapter**
12. **Flywheel Mounting Capscrews**
13. **Fuel Shutoff Assemblies**
14. **Fuel Supply Tubes**
15. **Lifting Brackets**
16. **Throttle Controls**
17. **Turbocharger Compressor Casing**
18. **Turbocharger Oil Drain Line(s)**
19. **Turbocharger Oil Supply Line(s)**
20. **Turbocharger Turbine Casing**
21. **Vibration Damper Mounting Capscrews**

- **Follow all safety instructions noted in the procedures**
  - Follow the manufacturer's recommendations for cleaning solvents and other substances used during the repair of the engine. Some solvents and used engine oil have been identified by government agencies as toxic or carcinogenic. Avoid excessive breathing, ingestion and contact with such substances. **Always** use good safety practices with tools and equipment.
- **Provide a clean environment and follow the cleaning instructions specified in the procedures**
  - The engine and its components **must** be kept clean during any repair. Contamination of the engine or components will cause premature wear.
- **Perform the inspections specified in the procedures**
- **Replace all components or assemblies which are damaged or worn beyond the specifications**
- **Use genuine Cummins new or ReCon® service parts and assemblies**
  - The assembly instructions have been written to use again as many components and assemblies as possible. When it is necessary to replace a component or assembly, the procedure is based on the use of new Cummins or Cummins ReCon® components. All of the repair services described in this manual are available from all Cummins Distributors and most Dealer locations.
- **Follow the specified disassembly and assembly procedures to reduce the possibility of damage to the components**

Complete rebuild instructions are available in the shop manual which can be ordered or purchased from a Cummins Authorized Repair Location. Refer to Section L — Service Literature for ordering instructions.

Welding on a Vehicle with an Electronic Controlled Fuel System

⚠CAUTION⚠

Disconnect both the positive (+) and negative (-) battery cables from the battery before welding on the vehicle. Attach the welder ground cable no more than 0.61 meters [2 feet] from the part being welded. Do not connect the ground cable of the welder to the ECM cooling plate or ECM. Welding on the engine or engine mounted components is not recommended or damage to the engine or components can result.

General Cleaning Instructions

Definition of Clean

Parts **must** be free of debris that can contaminate any engine system. This does **not** necessarily mean they have to appear as new.

Sanding gasket surfaces until the factory machining marks are disturbed adds no value and is often harmful to forming a seal. It is important to maintain surface finish and flatness tolerances to form a quality sealing surface. Gaskets are designed to fill small voids in the specified surface finish.

Sanding gasket surfaces where edge-molded gaskets are used is most often unnecessary. Edge-molded gaskets are those metal carriers with sealing material bonded to the edges of the gasket to seal while the metal portion forms a metal to metal joint for stability. Any of the small amounts of sealing material that can stick to the parts are better removed with a blunt-edged scraper on the spots rather than spending time polishing the whole surface with an air sander or disc.

For those gaskets that do **not** have the edge molding, nearly all have a material that contains release agents to prevent sticking. Certainly this is **not** to say that some gaskets are **not** difficult to remove because the gasket has been in place a long time, has been overheated or the purpose of the release agent has been defeated by the application of some sealant. The object however is just to remove the gasket without damaging the surfaces of the mating parts without contaminating the engine (don't let the little bits fall where they can not be removed).

Bead blasting piston crowns until the dark stain is removed is unnecessary. All that is required is to remove the carbon build-up above the top ring and in the ring grooves. There is more information on bead blasting and piston cleaning later in this document.

Cummins Inc. does **not** recommend sanding or grinding the carbon ring at the top of cylinder liners until clean metal is visible. The liner will be ruined and any signs of a problem at the top ring reversal point (like a dust-out) will be destroyed. It is necessary to remove the carbon ring to provide for easier removal of the piston assembly. A medium bristle, high quality, steel wire wheel that is rated above the rpm of the power tool being used will be just as quick and there will be less damage. Yes, one **must** look carefully for broken wires after the piston is removed but the wires are more visible and can be attracted by a magnet.

Oil on parts that have been removed from the engine will attract dirt in the air. The dirt will adhere to the oil. If possible, leave the old oil on the part until it is ready to be cleaned, inspected and installed, and then clean it off along with any attracted dirt. If the part is cleaned then left exposed it can have to be cleaned again before installation. Make sure parts are lubricated with clean oil before installation. They do **not** need to be oiled all over but do need oil between moving parts (or a good lube system priming process conducted before cranking the engine).

Bead blasting parts to remove exterior paint is also usually unnecessary. The part will most likely be painted again so all that needs happen is remove any loose paint.

Abrasive Pads and Abrasive Paper

The keyword here is "abrasive". There is no part of an engine designed to withstand abrasion. That is they are all supposed to lock together or slide across each other. Abrasives and dirt particles will degrade both functions.

⚠WARNING⚠

Abrasive material must be kept out of or removed from oil passages and parts wear points. Abrasive material in oil passages can cause bearing and bushing failures that can progress to major component damage beyond reuse. This is particularly true of main and rod bearings.

Cummins Inc. does **not** recommend the use of emery cloth or sand paper on any part of an **assembled** engine or component including but **not** limited to removing the carbon ridge from cylinder liners or to clean block decks or counterbores.

Great care **must** be taken when using abrasive products to clean engine parts, particularly on partially assembled engines. Abrasive cleaning products come in many forms and sizes. All of them contain aluminum oxide particles, silicon carbide, or sand or some other similar hard material. These particles are harder than most of the parts in the engine. Since they are harder, if they are pressed against softer material they will either damage the material or become embedded in it. These materials fall off the holding media as the product is used. If the products are used with power equipment the particles are thrown about the engine. If the particles fall between two moving parts, damage to the moving parts is likely.

If particles that are smaller than the clearance between the parts while they are at rest (engine stopped), but larger than the running clearance then damage will occur when the parts move relative to each other (engine started). While the engine is running and there is oil pressure, particles that are smaller than the bearing clearance are likely to pass between the parts without damage and be trapped in the oil filter. However, particles larger than the bearing clearance will remove material from one part and can become embedded in one of the parts. Once embedded in one part it will

abrade the other part until contact is no longer being made between the two parts. If the damage sufficiently degrades the oil film, the two parts will come into contact resulting in early wear-out or failure from lack of effective lubrication.

Abrasive particles can fly about during cleaning it is **very** important to block these particles from entering the engine as much as possible. This is particularly true of lubricating oil ports and oil drilling holes, especially those located downstream of the lubricating oil filters. Plug the holes instead of trying to blow the abrasive particles and debris with compressed air because the debris is often simply blown further into the oil drilling.

All old gasket material **must** be removed from the parts gasket surfaces. However, it is **not** necessary to clean and polish the gasket surface until the machining marks are erased. Excessive sanding or buffing can damage the gasket surface. Many newer gaskets are of the edge molded type (a steel carrier with a sealing member bonded to the steel). What little sealing material that can adhere is best removed with a blunt-edged scraper or putty knife. Cleaning gasket surfaces where an edge-molded gasket is used with abrasive pads or paper is usually a waste of time.

⚠WARNING⚠

Excessive sanding or grinding the carbon ring from the top of the cylinder liners can damage the liner beyond reuse. The surface finish will be damaged and abrasive particles can be forced into the liner material which can cause early cylinder wear-out or piston ring failures.

Tape off or plug all openings to any component interior before using abrasive pads or wire brushes. If really necessary because of time to use a power tool with abrasive pads, tape the oil drillings closed or use plug and clean as much of the surface as possible with the tool but clean around the oil hole/opening by hand so as to prevent contamination of the drilling. Then remove the tape or plug and clean the remaining area carefully and without the tool. DO NOT use compressed air to blow the debris out of oil drilling on an assembled engine! More likely than **not**, the debris can be blown further into the drilling. Using compressed air is fine if both ends of the drilling are open but that is rarely the case when dealing with an assembled engine.

Gasket Surfaces

The object of cleaning gasket surfaces is to remove any gasket material, not refinish the gasket surface of the part.

Cummins Inc. does **not** recommend any specific brand of liquid gasket remover. If a liquid gasket remover is used, check the directions to make sure the material being cleaned will **not** be harmed.

Air powered gasket scrapers can save time but care must be taken to **not** damage the surface. The angled part of the scraper must be against the gasket surface to prevent the blade from digging into the surface. Using air powered gasket scrapers on parts made of soft materials takes skill and care to prevent damage.

Do **not** scrape or brush across the gasket surface if at all possible.

Solvent and Acid Cleaning

Several solvent and acid-type cleaners can be used to clean the disassembled engine parts (other than pistons. See Below). Experience has shown that the best results can be obtained using a cleaner that can be heated to 90° to 95° Celsius (180° to 200° Fahrenheit). Kerosene emulsion based cleaners have different temperature specifications, see below. A cleaning tank that provides a constant mixing and filtering of the cleaning solution will give the best results. Cummins Inc. does not recommend any specific cleaners. Always follow the cleaner manufacturer's instructions. Remove all the gasket material, o-rings, and the deposits of sludge, carbon, etc., with a wire brush or scraper before putting the parts in a cleaning tank. Be careful not to damage any gasket surfaces. When possible, steam clean the parts before putting them in the cleaning tank.

⚠WARNING⚠

When using solvents, acids, or alkaline materials for cleaning, follow the manufacturers recommendations for use. Wear goggles and protective clothing to reduce the possibility of personal injury.

Experience has shown that kerosene emulsion based cleaners perform the best to clean pistons. These cleaners should **not** be heated to temperature in excess of 77°C (170°F). The solution begins to break down at temperatures in excess of 82°C (180°F) and will be less effective.

Do **not** use solutions composed mainly of chlorinated hydrocarbons with cresols, phenols and/or cresylic components. They often do **not** do a good job of removing deposits from the ring groove and are costly to dispose of properly.

Solutions with a pH above approximately 9.5 will cause aluminum to turn black; therefore do **not** use high alkaline solutions.

Chemicals with a pH above 7.0 are considered alkaline and those below 7.0 are acidic. As you move further away from the neutral 7.0, the chemicals become highly alkaline or highly acidic.

Remove all the gasket material, o-rings, and the deposits of sludge, carbon, etc., with a wire brush or scraper before putting the parts in a cleaning tank. Be careful to **not** damage any gasket surfaces. When possible use hot high

pressure water or steam clean the parts before putting them in the cleaning tank. Removing the heaviest dirt before placing in the tank will allow the cleaner to work more effectively and the cleaning agent will last longer.

Rinse all the parts in hot water after cleaning. Dry completely with compressed air. Blow the rinse water from all the capscrew holes and the oil drillings.

If the parts are **not** to be used immediately after cleaning, dip them in a suitable rust proofing compound. The rust proofing compound **must** be removed from the parts before assembly or installation on the engine.

Steam Cleaning

Steam cleaning can be used to remove all types of dirt that can contaminate the cleaning tank. It is a good method for cleaning the oil drillings and coolant passages

⚠WARNING⚠

When using a steam cleaner, wear safety glasses or a face shield, as well as protective clothing. Hot steam can cause serious personal injury.

Do **not** steam clean the following components:

- Electrical Components
- Wiring Harnesses
- Injectors
- Fuel Pump
- Belts and Hoses
- Bearings (ball or taper roller)
- Electronic Control Module (ECM)
- ECM Connectors
- Dosing Control Unit
- NOx Sensor.

Plastic Bead Cleaning

Cummins Inc. does **not** recommend the use of glass bead blast or walnut shell media on **any** engine part. Cummins Inc. recommends using **only** plastic bead media, Part Number 3822735 or equivalent on any engine part. **Never** use sand as a blast media to clean engine parts. Glass and walnut shell media when **not** used to the media manufacturer's recommendations can cause excess dust and can embed in engine parts that can result in premature failure of components through abrasive wear.

Plastic bead cleaning can be used on many engine components to remove carbon deposits. The cleaning process is controlled by the use of plastic beads, the operating pressure and cleaning time.

△CAUTION△

Do not use bead blasting cleaning methods on aluminum pistons skirts or the pin bores in any piston, piston skirt or piston crown. Small particles of the media will embed in the aluminum or other soft metal and result in premature wear of the cylinder liner, piston rings, pins and pin bores. Valves, turbocharger shafts, etc., can also be damaged. Follow the cleaning directions listed in the procedures.

△CAUTION△

Do not contaminate wash tanks and tank type solvent cleaners with the foreign material and plastic beads. Remove the foreign material and plastic beads with compressed air, hot high pressure water or steam before placing them in tanks or cleaners. The foreign material and plastic beads can contaminate the tank and any other engine parts cleaned in the tank. Contaminated parts may cause failures from abrasive wear.

Plastic bead blasting media, Part Number 3822735, can be used to clean all piston ring grooves. Do **not** sure any bead blasting media on piston pin bores or aluminum skirts.

Follow the equipment manufacturer's cleaning instructions. Make sure to adjust the air pressure in the blasting machine to the bead manufacturer's recommendations. Turning up the pressure can move material on the part and cause the plastic bead media to wear out more quickly. The following guidelines can be used to adapt to manufacturer's instructions:

1. Bead size: U.S. size Number 16 — 20 for piston cleaning with plastic bead media, Part Number 3822735
2. Operating Pressure — 270 kPa (40 psi) for piston cleaning. Pressure should not cause beads to break.
3. Steam clean or wash the parts with solvent to remove all of the foreign material and plastic beads after cleaning. Rinse with hot water. Dry with compressed air.

⚠CAUTION⚠

The bead blasting operation must not disturb the metal surface. If the metal surface is disturbed the engine can be damaged due to increased parts clearance or inadequate surface finish on parts that move against other parts.

When cleaning pistons, it is **not** necessary to remove all the dark stain from the piston. All that is necessary is to remove the carbon on the rim and in the ring grooves. This is best done by directing the blast across the part as opposed to straight at the part. If the machining marks are disturbed by the blasting process, then the pressure is too high or the blast is being held on one spot too long. The blast operation **must not** disturb the metal surface.

Walnut shell bead blast material is sometimes used to clean ferrous metals (iron and steel). Walnut shell blasting produces a great amount of dust particularly when the pressure if the air pressure on the blasting machine is increased above media manufacturer's recommendation. Cummins Inc. recommends **not** using walnut shell media to clean engine parts due to the risk media embedment and subsequent contamination of the engine.

Cummins Inc. now recommends glass bead media **NOT** used to clean any engine parts. Glass media is too easily embedded into the material particularly in soft materials and when air pressures greater than media manufacturer's recommend are used. The glass is an abrasive so when it is in a moving part, that part is abrading all the parts in contact with it. When higher pressures are used the media is broken and forms a dust of a very small size that floats easily in the air. This dust is very hard to control in the shop, particularly if **only** compressed air (and not hot water) is used to blow the media after it is removed from the blasting cabinet (blowing the part off inside the cabinet may remove large accumulations but never removes all the media).

Bead blasting is best used on stubborn dirt/carbon build-up that has **not** been removed by first steam/higher pressure washing then washing in a heated wash tank. This is particularly true of pistons. Steam and soak the pistons first then use the plastic bead method to safely remove the carbon remaining in the grooves (instead of running the risk of damaging the surface finish of the groove with a wire wheel or end of a broken piston ring. Make sure the parts are dry and oil free before bead blasting to prevent clogging the return on the blasting machine.

Always direct the bead blaster nozzle "across" rather than directly at the part. This allows the bead to get under the unwanted material. Keep the nozzle moving rather than hold on one place. Keeping the nozzle directed at one-place too long causes the metal to heat up and be moved around. Remember that the spray is **not** just hitting the dirt or carbon. If the machining marks on the piston groove or rim have been disturbed then there has **not** been enough movement of the nozzle and/or the air pressure is too high.

Never bead blast valve stems. Tape or use a sleeve to protect the stems during bead blasting. Direct the nozzle across the seat surface and radius rather than straight at them. The object is to remove any carbon build up and continuing to blast to remove the stain is a waste of time.

Fuel System

When servicing any fuel system components, which can be exposed to potential contaminants, prior to disassembly, clean the fittings, mounting hardware, and the area around the component to be removed. If the surrounding areas are **not** cleaned, dirt or contaminants can be introduced into the fuel system.

The internal drillings of some injectors are extremely small and susceptible to plugging from contamination. Some fuel injection systems can operate at very high pressures. High pressure fuel can convert simple particles of dirt and rust into a highly abrasive contaminant that can damage the high pressure pumping components and fuel injectors.

Electrical contact cleaner can be used if steam cleaning tools are **not** available. Use electrical contact cleaner rather than compressed air, to wash dirt and debris away from fuel system fittings. Diesel fuel on exposed fuel system parts attracts airborne contaminants.

Choose lint free towels for fuel system work.

Cap and plug fuel lines, fittings, and ports whenever the fuel system is opened. Rust, dirt, and paint can enter the fuel system whenever a fuel line or other component is loosened or removed from the engine. In many instances, a good practice is to loosen a line or fitting to break the rust and paint loose, and then clean off the loosened material.

When removing fuel lines or fittings from a new or newly-painted engine, make sure to remove loose paint flakes/ chips that can be created when a wrench contacts painted line nuts or fittings, or when quick disconnect fittings are removed.

Fuel filters are rated in microns. The word micron is the abbreviation for a micrometer, or one millionth of a meter. The micron rating is the size of the smallest particles that will be captured by the filter media. As a reference, a human hair is 0.003 mm [3/1000 in] in diameter. One micron measures 0.00004 mm [4/100,000 in]. The contaminants being filtered out are smaller than can be seen with the human eye, a magnifying glass, or a low powered microscope.

The tools used for fuel system troubleshooting and repair are to be cleaned regularly to avoid contamination. Like fuel system parts, tools that are coated with oil or fuel attract airborne contaminants. Remember the following points regarding your fuel system tools:

- Fuel system tools are to be kept as clean as possible.
- Clean and dry the tools before returning them to the tool box.
- If possible, store fuel system tools in sealed containers.
- Make sure fuel system tools are clean before use.

Acronyms and Abbreviations

General Information

The following list contains some of the acronyms and abbreviations used in this manual.

API	American Petroleum Institute
ASTM	American Society of Testing and Materials
BTU	British Thermal Unit
°C	Celsius
CARB	California Air Resources Board
C.I.D.	Cubic Inch Displacement
CNG	Compressed Natural Gas
CPL	Control Parts List
cSt	Centistokes
ECM	Electronic Control Module
EGR	Exhaust Gas Recirculation
EPA	Environmental Protection Agency
°F	Fahrenheit
FMI	Failure Mode Indentifier
GVW	Gross Vehicle Weight
LPG	Liquified Petroleum Gas
Hg	Mercury
hp	Horsepower
H_2O	Water
ICM	Ignition Control Module
km/l	Kilometers per Liter
kPa	Kilopascal
LNG	Liquid Natural Gas
LTA	Low Temperature Aftercooling
MPa	Megapascal
mph	Miles Per Hour
mpq	Miles Per Quart
N•m	Newton-meter
NG	Natural Gas
OEM	Original Equipment Manufacturer
PID	Parameter Identification Descriptions
ppm	Parts Per Million
psi	Pounds Per Square Inch
PTO	Power Takeoff
RGT	Rear Gear Train
rpm	Revolutions Per Minute
SAE	Society of Automotive Engineers
SCA	Supplemental Coolant Additive
STC	Step Timing Control
SID	Subsystem Identification Descriptions
VS	Variable Speed
VSS	Vehicle Speed Sensor

Section E - Engine Identification

Section Contents

Page
Engine Diagrams E-2
Engine Views E-2
Industrial CM570 and Power Generation without CM570 ..... E-3
Engine Identification E-1
ECM Dataplate E-1
Industrial Applications E-1
Power Generation E-1
Engine Dataplate E-1

This Page Left Intentionally Blank

Engine Identification

Engine Dataplate

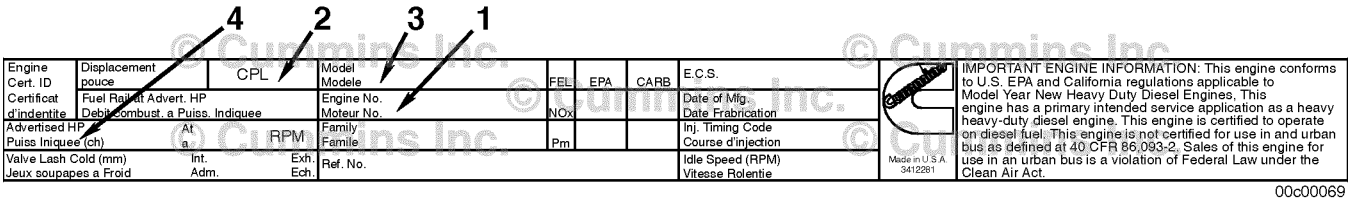

00c00069

The engine dataplate, located on top of the rocker lever cover, provides the model identification and other important data about the engine.

Have the following engine data available when communicating with a Cummins Authorized Repair Location. The data on the dataplate are **mandatory** when sourcing service parts:

1. Engine serial number (ESN)
2. Control parts list
3. Model
4. Advertised horsepower and rpm.

ECM Dataplate

Industrial Applications

The electronic control module (ECM) dataplate is located on the front of the ECM.

The abbreviations on the dataplate are explained as follows:

- P/N = Part number
- S/N = Serial number
- D/C = Data code.

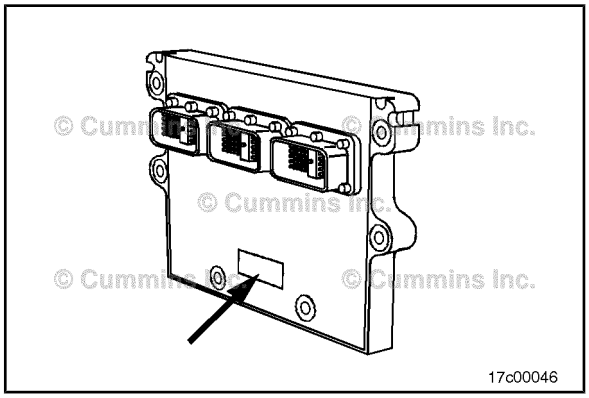
17c00046

Power Generation

The electronic control module (ECM) dataplate is located on the front of the ECM.

The abbreviations on the dataplate are explained as follows:

- P/N = Part number
- S/N = Serial number
- D/C = Date code.

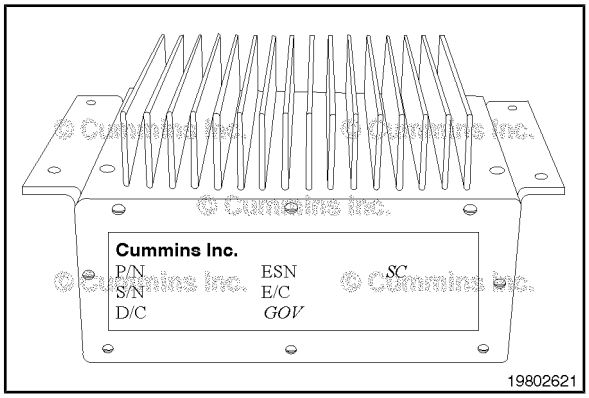

19802621

Engine Diagrams

Engine Views

The following illustrations show the location of the major external engine components, filters, and other service and maintenance points. Some external components will be at different locations for different engine models.

Industrial CM570 and Power Generation without CM570

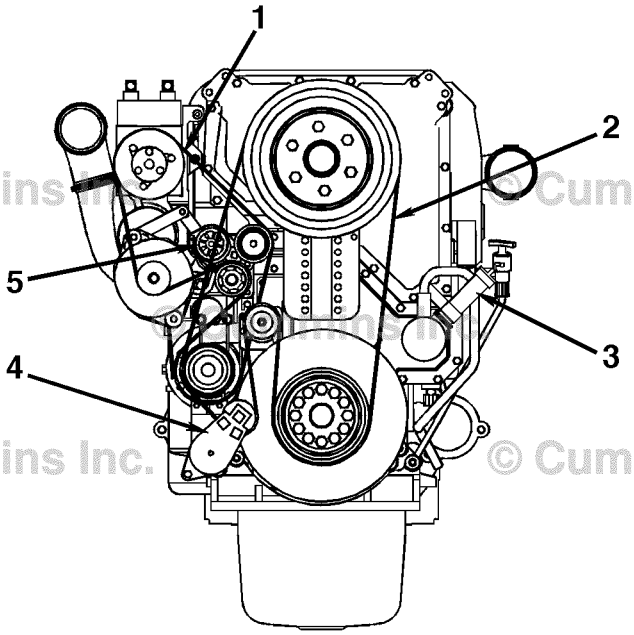

© Cummins Inc. © Cummins Inc. © Cummins Inc. © Cummins Inc.

00c00056

QSX15 Industrial with CM570 - Front View

1. Accessory drive belt
2. Water pump/fan drive belt
3. Lubricating oil fill
4. Water pump/fan drive belt tensioner
5. Accessory drive belt tensioner.

Industrial CM570 and Power Generation without CM570

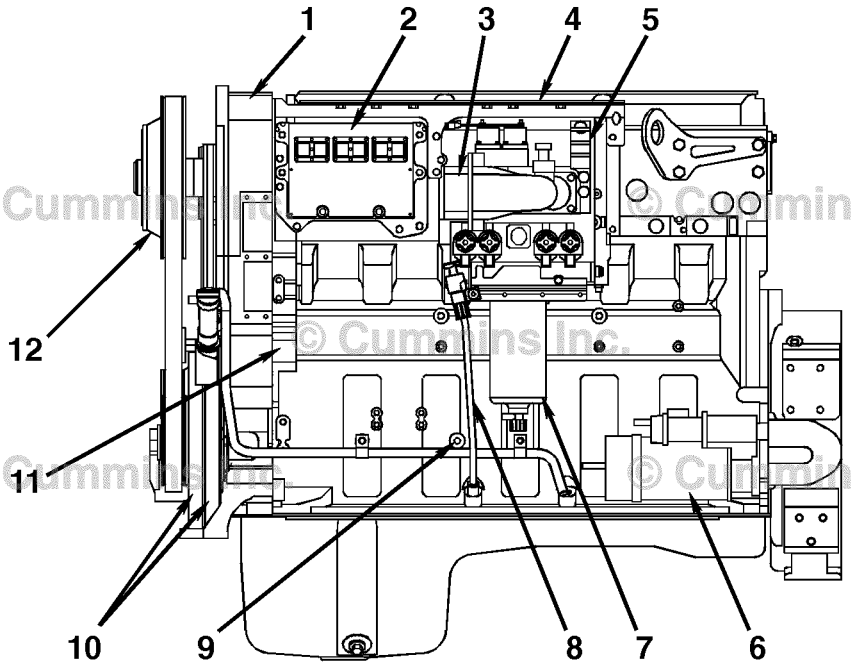

QSX15 Industrial with CM570 - Left Side View

1. Gear housing
2. ECM
3. Air intake
4. Engine dataplate
5. Fuel pump
6. Starter
7. Fuel filter
8. Lubricating oil dipstick
9. Crankshaft timing pin port
10. Vibration dampers
11. Barring device/air compressor
12. Fan hub.

Industrial CM570 and Power Generation without CM570

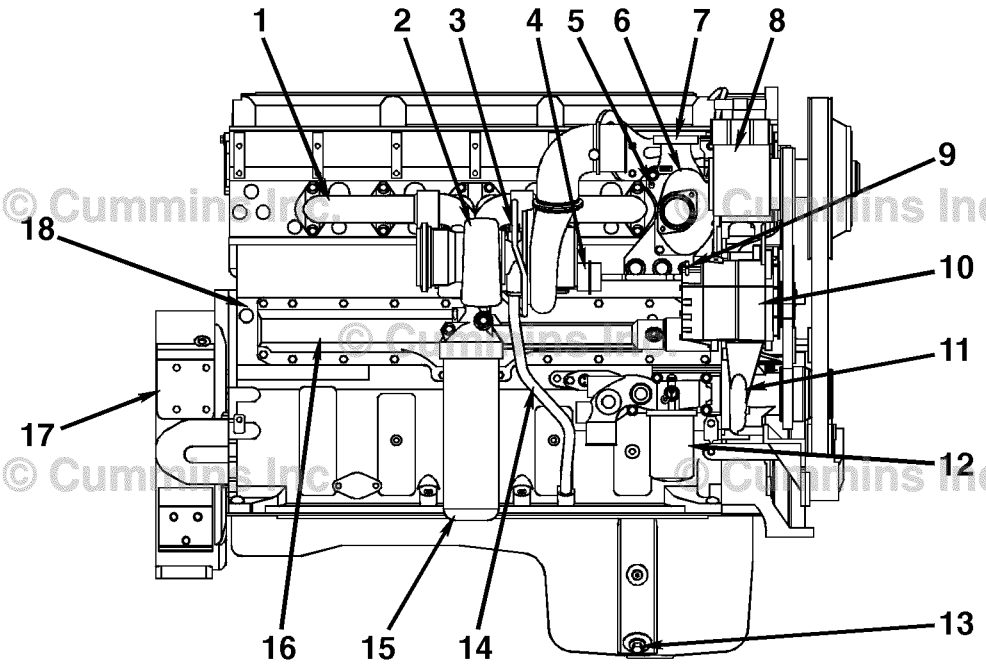

QSX15 Industrial with CM570 - Right Side View

1. Exhaust manifold
2. Turbocharger
3. Oil inlet to turbocharger
4. Wastegate actuator
5. Thermostat housing vent
6. Thermostat housing
7. Engine coolant outlet (to radiator)
8. Freon compressor
9. Coolant temperature sensor
10. Alternator
11. Water pump
12. Coolant filter
13. Lubricating oil drain
14. Turbocharger oil drain
15. Combination full-flow/bypass lubricating oil filter
16. Lubricating oil cooler assembly
17. Flywheel housing
18. Engine serial number.

Industrial CM570 and Power Generation without CM570

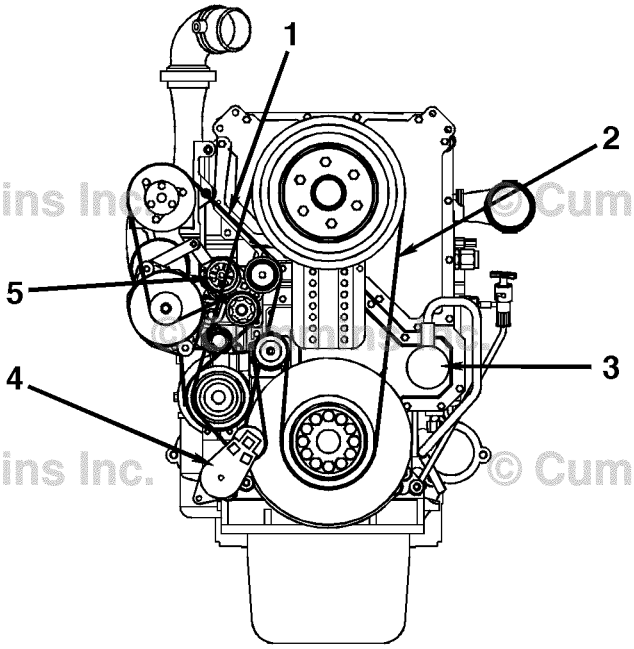

© Cummins Inc. © Cummins Inc.
© Cummins Inc. © Cummins Inc.

00c00059

QSX15 Power Generation without CM570 - Front View

1. Accessory drive belt
2. Water pump/fan drive belt
3. Oil fill/crankcase breather
4. Water pump/fan drive belt tensioner
5. Accessory drive belt tensioner.

Industrial CM570 and Power Generation without CM570

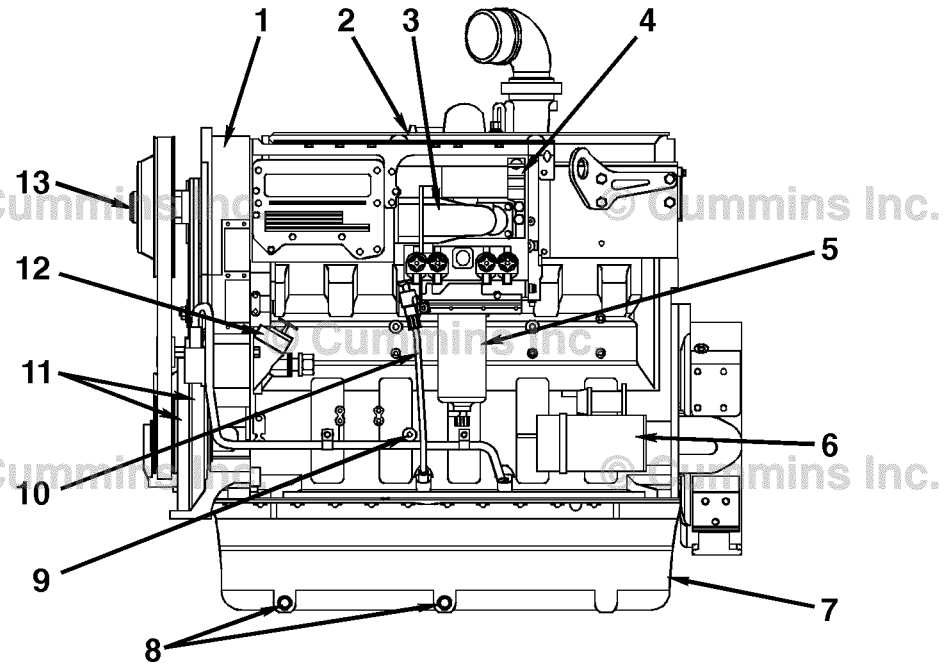

QSX15 Power Generation without CM570 - Left Side View

1. Gear cover
2. Engine dataplate
3. Air intake
4. Fuel pump
5. Fuel filter
6. Starter
7. Lubricating oil pan
8. Lubricating oil drains
9. Crankshaft timing pin port
10. Lubricating oil dipstick
11. Vibration dampers
12. Lubricating oil fill/barring device
13. Fan hub.

Industrial CM570 and Power Generation without CM570

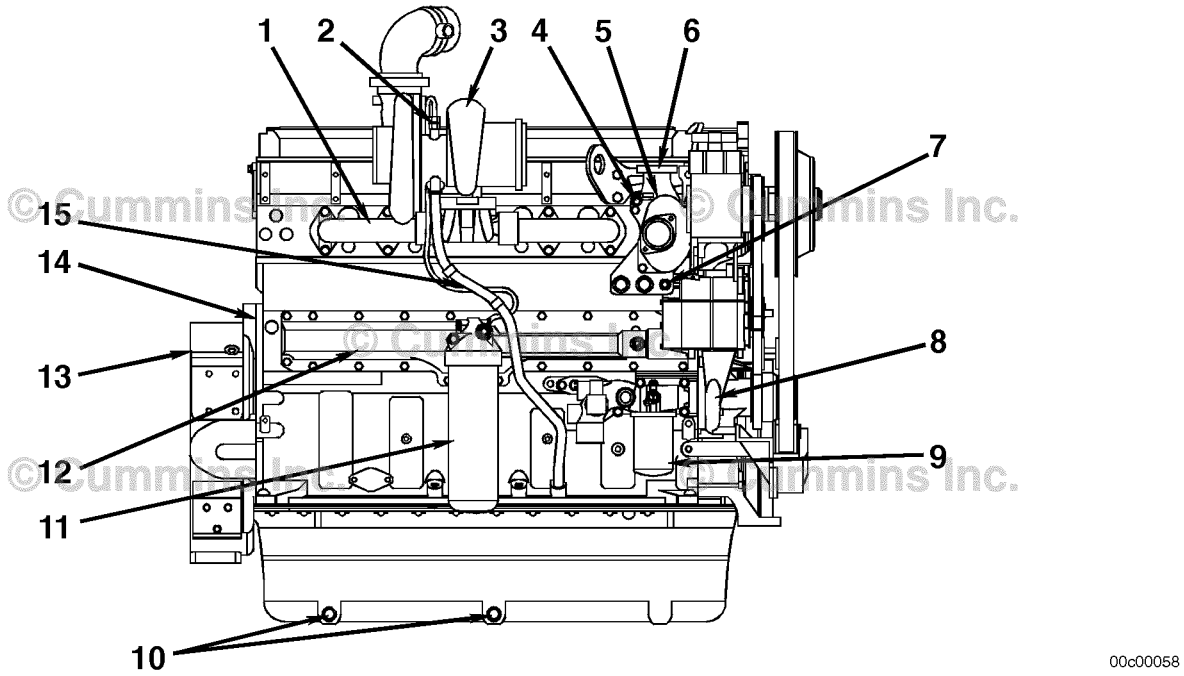

QSX15 Power Generation without CM570 - Right Side View

1. Exhaust manifold
2. Lubricating oil Inlet to turbocharger
3. Turbocharger
4. Thermostat housing vent
5. Thermostat housing
6. Engine coolant outlet (to radiator)
7. Coolant temperature sensor
8. Water pump
9. Coolant filter
10. Lubricating oil drains
11. Combination full-flow/bypass lubricating oil filter
12. Lubricating oil cooler assembly
13. Flywheel housing
14. Engine serial number
15. Turbocharger lubricating oil drain.

Industrial CM570 and Power Generation without CM570

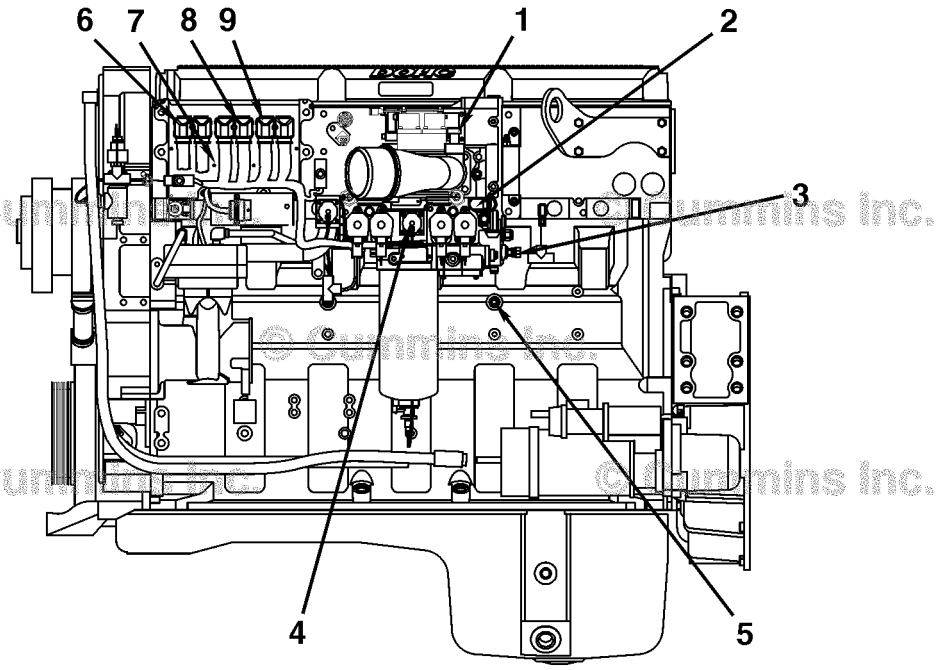

© Cummins Inc.

17c00044

Fuel System - Left Side View

1. Fuel shutoff valve
2. Oil pressure/temperature sensor
3. Intake manifold pressure/temperature sensor
4. Cooling plate (behind ECM)
5. ECM

1. ECM/engine harness port (actuator)
2. ECM/engine harness port (OEM)
3. Fuel inlet
4. Fuel outlet
5. ECM/sensor port.

Industrial CM570 and Power Generation without CM570

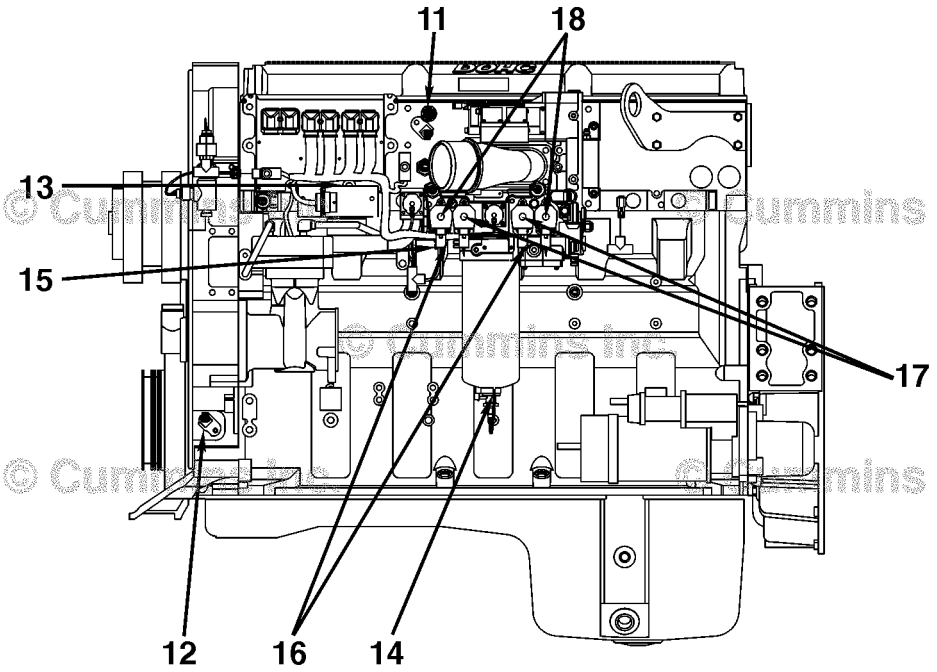

© Cummins Inc.

Fuel System - Left Side View (continued)

11. Camshaft position sensor
12. Crankshaft position sensor
13. Ambient air pressure sensor
14. Water-in-Fuel sensor

11. Fuel pressure sensor
12. Front and rear rail sensors*
13. Timing actuators
14. Fueling actuators.

* Eliminated on most engines

Industrial CM570 and Power Generation without CM570

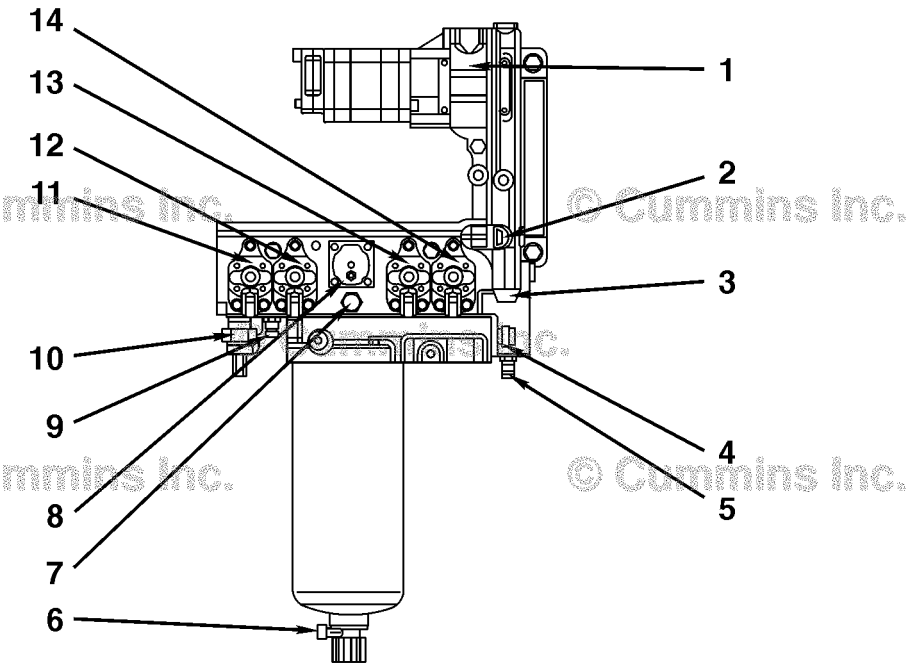

© Cummins Inc.

Fuel Delivery Housing - Front View

1. Priming bypass valve (internal)
2. 320 psi pressure regulator
3. 36-micron filter screen
4. Fuel inlet
5. Quick disconnect pressure tap - suction side
6. Water-In-Fuel sensor
7. 250 psi pressure regulator
8. Fuel shutoff valve
9. Quick disconnect pressure tap - pressure side
10. Fuel pressure sensor
11. Front rail actuator
12. Front timing actuator
13. Rear timing actuator
14. Rear rail actuator.

Industrial CM570 and Power Generation without CM570

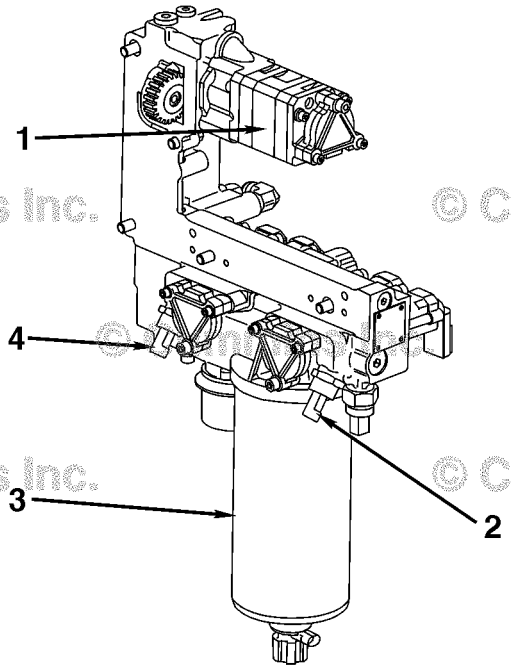

© Cummins Inc.

05c00048

QSX15 with CM570 Fuel Delivery Housing - Rear View

1. Fuel pump assembly
2. Front rail pressure sensor*
3. Fuel filter
4. Rear rail pressure sensor*.

* Eliminated on most engines.

Section 1 - Operating Instructions

Section Contents

Page

Cold Weather Starting 1-2
General Information....1-2
Using Starting Aids....1-2
Electromagnetic Interference (EMI) 1-21
General Information....1-21
System EMI Radiation Levels....1-21
System EMI Susceptibility....1-21
Electronic Controlled Fuel System 1-8
Diagnostic Fault Codes....1-9
Industrial Applications....1-9
Engine Protection System....1-15
Fuel System Description....1-15
General Information....1-8
Engine Operating Range 1-8
General Information....1-8
Engine Shutdown 1-8
General Information....1-8
Normal Starting Procedure 1-3
General Information....1-3
Jump Starting....1-5
Operating Instructions - Overview 1-1
General Information....1-1
Operating the Engine 1-5
Ambient Temperature....1-6
0 to -32°C [32 to -25°F]....1-6
-32 to -54°C [-25 to -65°F]....1-6
Cold Weather....1-6
Normal....1-5
Winterfronts and Shutters....1-7
Starting Procedure After Extended Shutdown or Oil Change 1-2
General Information....1-2

This Page Left Intentionally Blank

Operating Instructions - Overview

General Information

Correct care of your engine will result in longer life, better performance, and more economical operation.

Follow the daily maintenance checks listed in Maintenance Guidelines (Section 2).

The **new** Cummins engine associated with this manual does **not** require a ”break-in” procedure. This section of the manual provides all of the necessary information required for proper engine operation.

Check the oil pressure indicators, temperature indicators, warning lights, and other gauges daily to make sure they are operational.

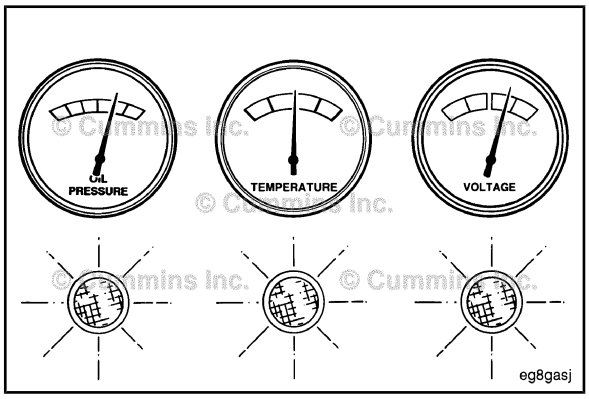

⚠ WARNING ⚠

DO NOT OPERATE A DIESEL ENGINE WHERE THERE ARE OR CAN BE COMBUSTIBLE VAPORS. The vapors can be sucked through the air intake system and cause engine acceleration and overspeeding that can result in a fire, an explosion, and extensive property damage. Numerous safety devices are available, such as air intake shutoff devices, to minimize the risk of overspeeding where an engine, due to its application, due to a fuel spill or gas leak. Remember, Cummins has no way of knowing the use you have for your engine. THE EQUIPMENT OWNER AND OPERATOR ARE RESPONSIBLE FOR SAFE OPERATION IN A HOSTILE ENVIRONMENT. CONSULT YOUR CUMMINS AUTHORIZED REPAIR LOCATION FOR FURTHER INFORMATION.

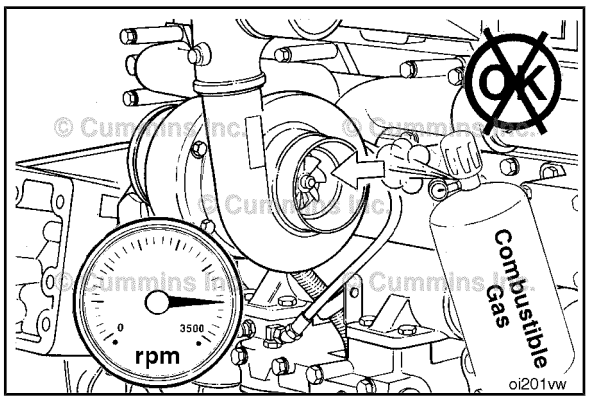

Cummins recommends the installation of an air intake shutoff device or a similar safety device to minimize the risk of overspeeding where an engine, due to the vehicle, vessel or equipment being operated in a combustible environment, such as due to a fuel spill or gas leak.

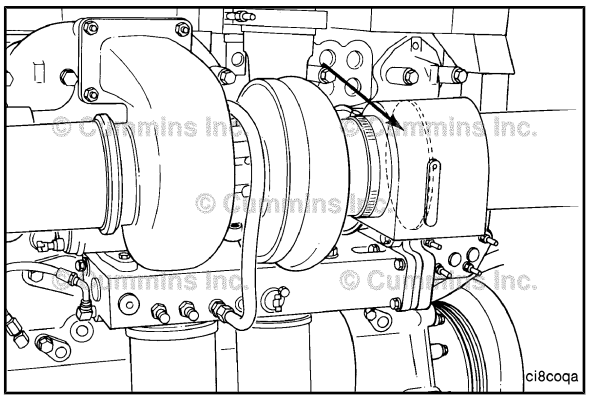

⚠CAUTION⚠

Do not expose the engine to corrosive chemicals. Corrosive chemicals can damage the engine.

Cold Weather Starting

General Information

Follow the Normal Starting Procedures in this section. In cold weather, the engine can run at idle **only** longer.

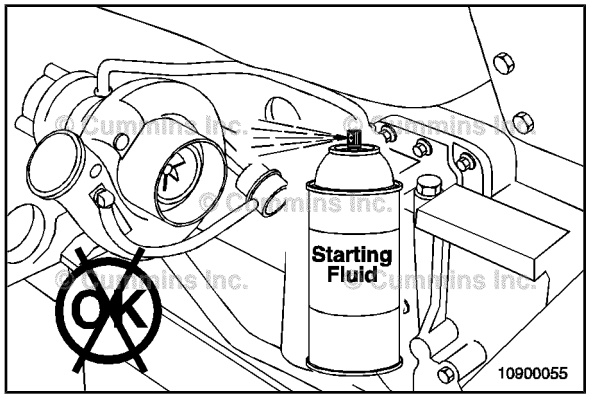

Using Starting Aids

Cold weather starting aids are available for your engine. Contact the local Cummins Authorized Repair Location for more information.

Starting Procedure After Extended Shutdown or Oil Change

General Information

Follow the Normal Starting Procedure in this section. The engine will run at idle **only** until the minimum oil pressure is detected by the ECM.

Normal Starting Procedure

General Information

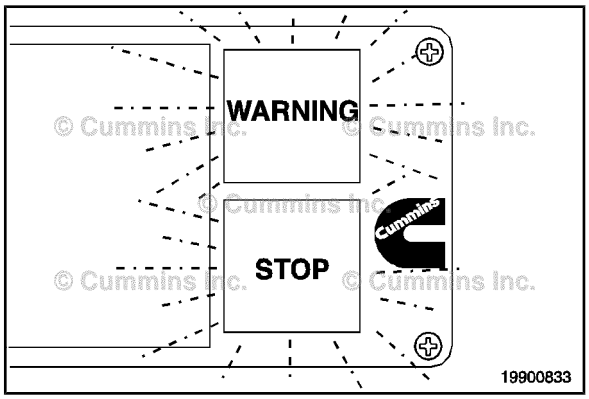

The stop or stop engine lamp is red and indicates the need to stop the engine as soon as it can be safely done. The engine **must** remain shut down until the engine can be repaired.

The warning or check engine lamp is yellow. When it illuminates, the engine is in need of repair at the first available opportunity.

The yellow lamp will flash for 30 seconds at key-on when one of the following occurs:

- Maintenance required (if maintenance monitor is enabled)
- Water-in-fuel is detected.

If the warning light flashes for 30 seconds at key-on and water is drained from the primary water-separating fuel filter, then the secondary fuel filter **must** be replaced.

⚠WARNING⚠

Do not depress the accelerator pedal or move the accelerator lever from the idle position while cranking the engine. This can result in engine overspeed and severe damage to the engine.

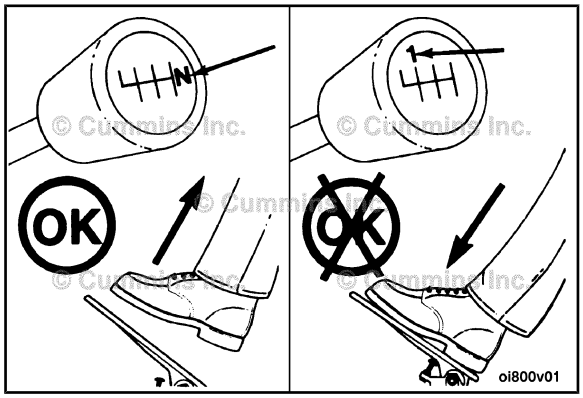

⚠CAUTION⚠

To prevent damage to the starting motor, do not engage the starting motor for more than 30 seconds. Wait 2 minutes between each attempt to start (electrical starting motors only).

NOTE: Engines equipped with air starting motors require a minimum of 480 kPa [70 PSI].

- Disengage the driven unit, or if equipped, put the transmission in neutral.
- With the accelerator pedal or lever in the idle position, turn the key switch to the ON position, then turn the key to the START position.
- If the engine does **not** start after three attempts, check the fuel supply system. Absence of blue or white exhaust smoke during cranking indicates no fuel is being delivered.

⚠CAUTION⚠

The engine must have adequate oil pressure within 15 seconds after starting. If the warning lamp indicating low oil pressure has not gone out or there is no oil pressure indicated on a gauge within 15 seconds, shut off the engine immediately to reduce the possibility of engine damage. The low oil pressure troubleshooting procedure is located in Troubleshooting Symptoms (Section TS).

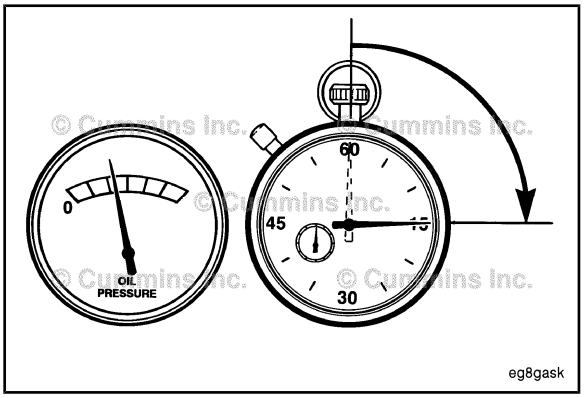

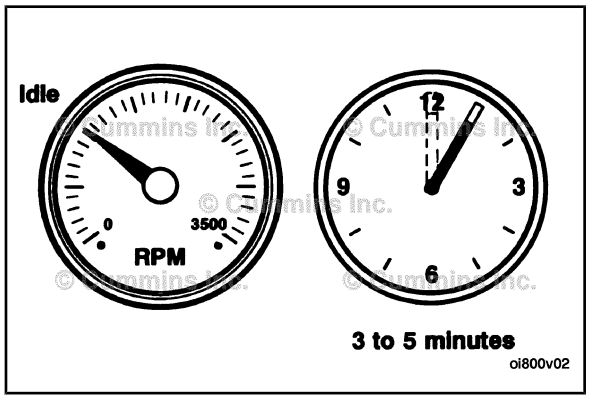

Idle the engine 3 to 5 minutes before operating with a load.

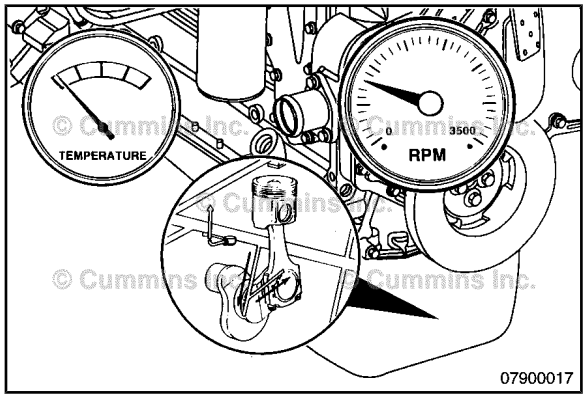

After starting a cold engine, increase the engine speed (rpm) slowly to provide adequate lubrication to the bearings and to allow the oil pressure to stabilize.

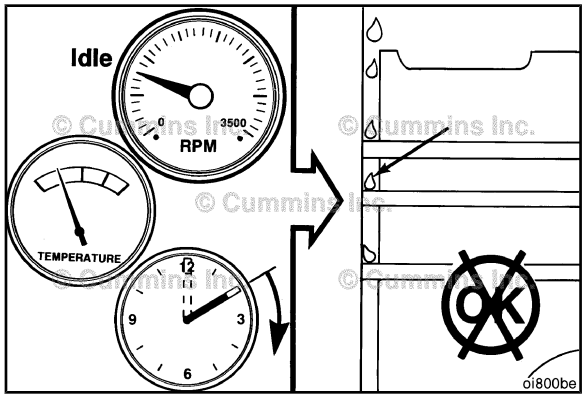

⚠CAUTION⚠

Do not operate engine at low idle for long periods with engine coolant temperature below the minimum specification in Coolant Recommendations and Specifications (Section V). This can result in the following:

- Fuel Dilution of the lubricating oil
- Carbon build up in the cylinder
- Cylinder head valve sticking
- Reduced performance

Jump Starting

⚠WARNING⚠

Batteries can emit explosive gases. To reduce the possibility of personal injury, always ventilate the compartment before servicing the batteries. To reduce the possibility of arcing, remove the negative (-) battery cable first and attach the negative (-) battery cable last.

△CAUTION△

When using jumper cables to start the engine, make sure to connect the cables in parallel: Positive (+) to positive (+) and negative (-) to negative (-). When using an external electrical source to start the engine, turn the disconnect switch to the OFF position. Remove the key before attaching the jumper cables.

△CAUTION△

To reduce the possibility of damage to engine parts, do not connect jumper starting or battery charging cable to any fuel system or electronic component.

The accompanying illustration shows a typical parallel battery connection. This arrangement doubles the cranking amperage.

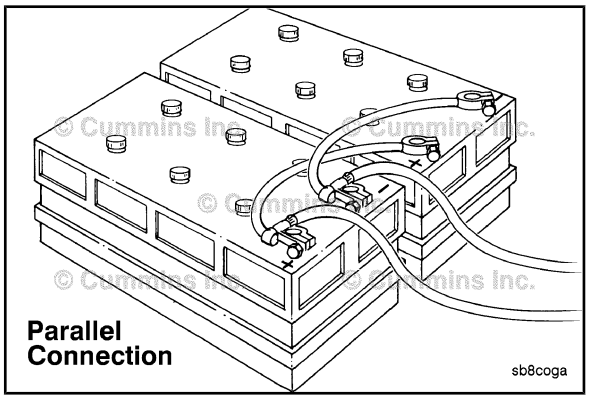

This illustration shows a typical series battery connection. This arrangement, positive (+) to negative (-), doubles the voltage.

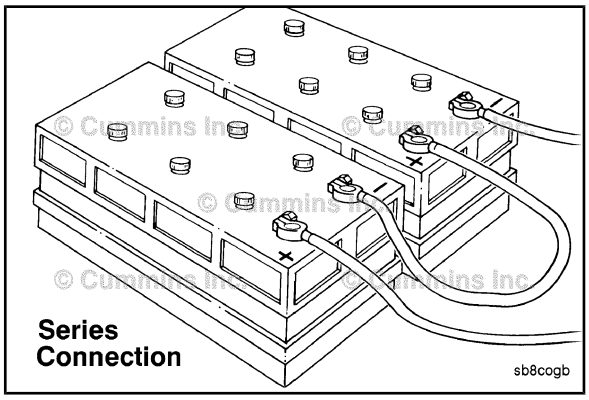

Operating the Engine

Normal

If equipped, monitor the oil pressure and coolant temperature gauges frequently. Refer to Lubricating Oil System specifications and Cooling System specifications, in Maintenance Specifications (Section V) for recommended operating pressures and temperatures. Shut off the engine if any pressure or temperature does **not** meet the specifications.

Continuous operation with engine coolant temperature above or below the engine coolant temperature specifications listed in Maintenance Specifications (Section V) can damage the engine.

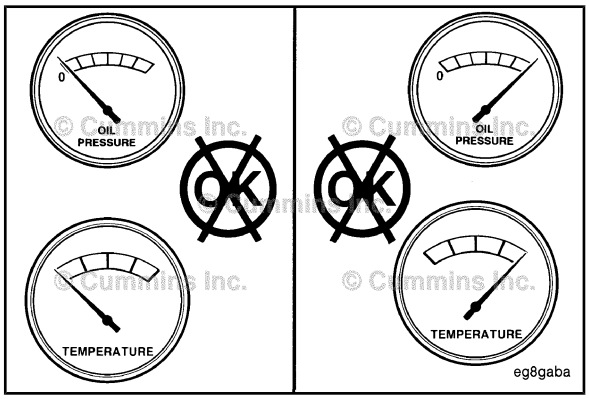

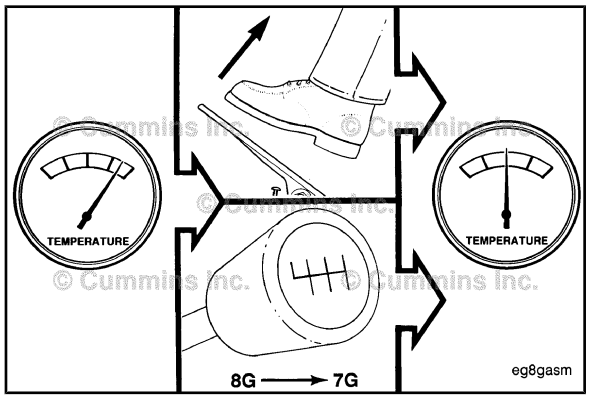

If an overheating condition starts to occur, reduce the power output of the engine by releasing the accelerator pedal or lever or shifting the transmission to a lower gear, or both, until the temperature returns to the normal operating range. If the engine temperature does **not** return to normal, shut off the engine, and refer to Troubleshooting Symptoms (Section TS), or contact a Cummins Authorized Repair Location.

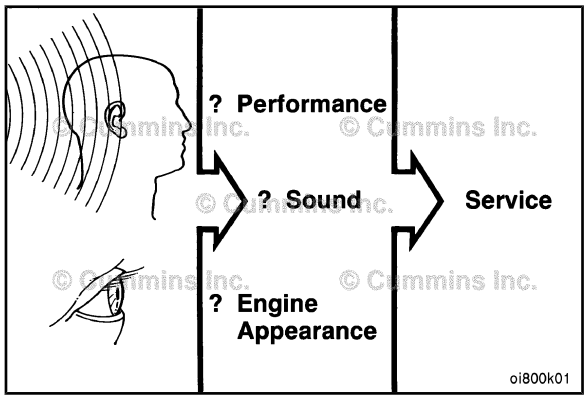

Most failures give an early warning. Look and listen for changes in performance, sound, or engine appearance that can indicate service or engine repair is needed. Some changes to look for are:

- Engine misfires
- Vibration
- Unusual engine noises
- Sudden changes in engine operating temperatures or pressures
- Excessive smoke
- Loss of power
- An increase in oil consumption
- An increase in fuel consumption
- Fuel, oil, or coolant leaks.

Cold Weather

It is possible to operate engines in extremely cold environments if they are properly prepared and maintained. Satisfactory performance of an engine in low ambient temperature conditions requires modification of the engine, surrounding equipment, operating practices and maintenance procedures.

The correct engine coolant lubricating oil and fuels **must** be used for the cold weather range in which the engine is being operated. Below are the recommendations for these critical engine fluids:

Ambient Temperature

0 to -32°C [32 to -25°F]

Use 50-percent ethylene glycol antifreeze and 50-percent water for the engine coolant mixture.

Refer to Maintenance Specifications (Section V) Lubricating Oil recommendations for the correct specifications.

The Diesel fuel **must** have maximum cloud and pour points 6°C [10°F] lower than the ambient temperature in which the engine operates.

-32 to -54°C [-25 to -65°F]

Use 60-percent ethylene glycol antifreeze and 40-percent water for the engine coolant mixture.

Refer to Maintenance Specifications (Section V) Lubricating Oil recommendations for the correct specifications.

The Diesel fuel **must** have maximum cloud and pour points 6°C [10°F] lower than the ambient temperature in which the engine operates.

The following cold weather operating aids are required for cold weather situations:

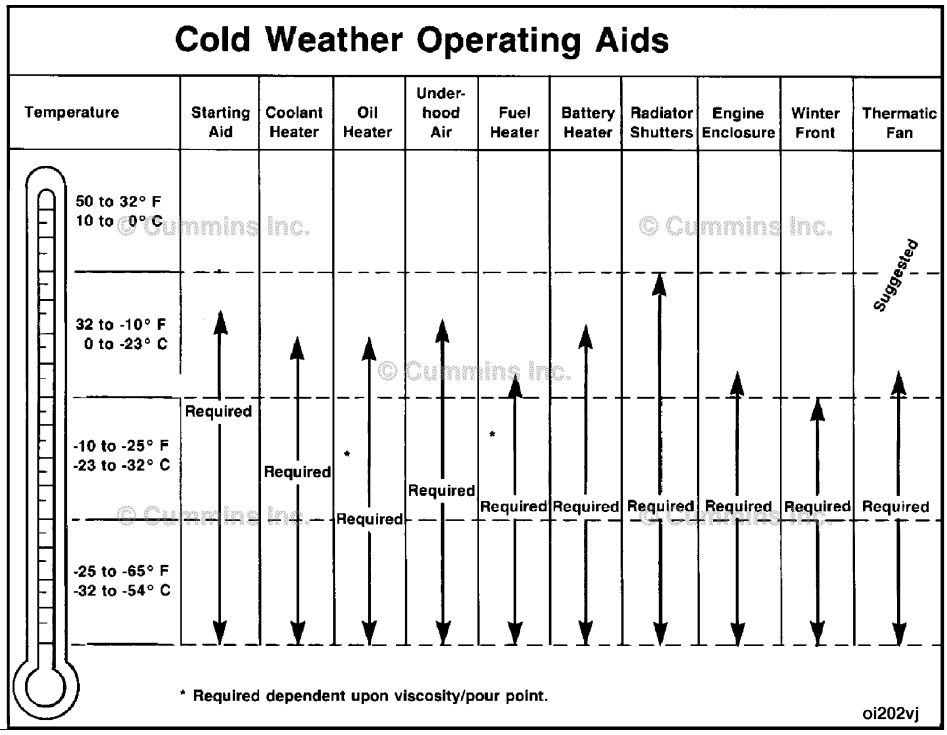

Winterfronts and Shutters

Winterfronts and shutters can be used on a vehicle or equipment to reduce air flow through the radiator core into the engine compartment. This can reduce the time required to warm the engine and help maintain the engine coolant temperature. The engine coolant temperature specifications are in the Maintenance Specification (Section V).

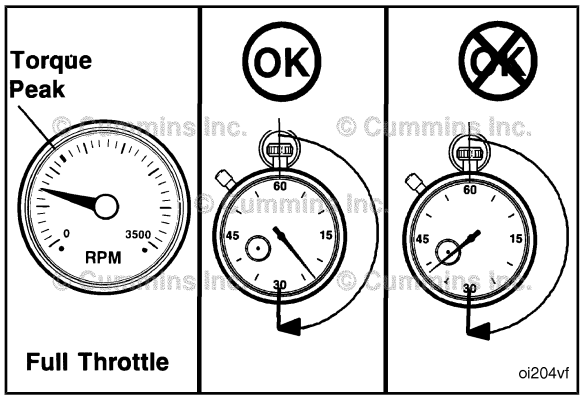

Engine Operating Range

General Information

⚠CAUTION⚠

Do not operate the engine at full throttle operation below peak torque rpm (refer to engine dataplate for peak torque rpm) for more than 30 seconds. Operating the engine at full throttle below peak torque will shorten engine life to overhaul, can cause serious engine damage, and is considered engine abuse.

Cummins® engines are designed to operate successfully at full throttle under transient conditions down to peak torque engine speed. This is consistent with recommended operating practices.

⚠CAUTION⚠

Do not operate the engine beyond the maximum engine speed. Operating the engine beyond the maximum engine speed can cause severe engine damage. Use proper operating techniques for the vehicle, vessel, or equipment to prevent engine overspeed. The maximum engine speed specification is listed in Maintenance Specifications (Section V).

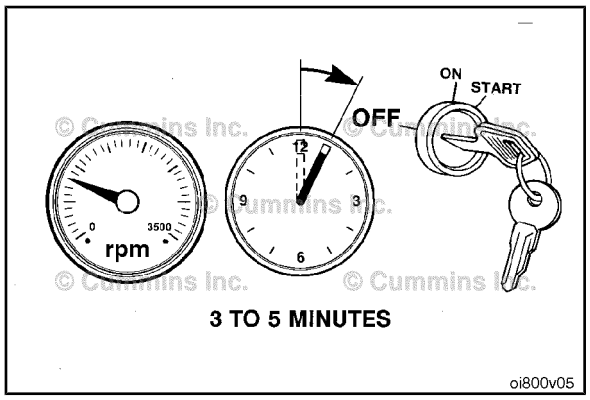

Engine Shutdown

General Information

Allow the engine to idle 3 to 5 minutes before shutting it off after a full-load operation. This allows adequate cool down of pistons, cylinders, bearings, and turbocharger components.

Turn the ignition switch to the OFF position. If the engine does **not** shut down, refer to Troubleshooting Symptom (Section TS) in appropriate Operation and Maintenance manual.

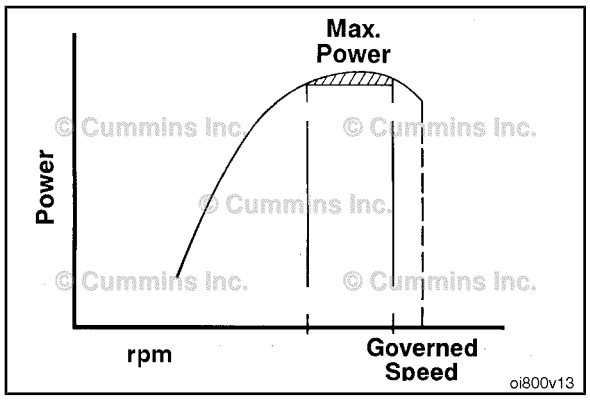

Electronic Controlled Fuel System

General Information

The Signature/ISX fuel system is an electronically controlled fuel injection system that optimizes fuel economy and reduces exhaust emissions. It does this by controlling the torque and horsepower curve, engine high speed, low idle, and road speed.

Signature/ISX has the capability of controlling the fan clutch actuator if an electronically controlled fan clutch is used.

Signature/ISX also allows the engine brakes to be activated by controlling the engine brake solenoids.

The electronic feature, fan control engine braking can be enabled to activate the fan clutch during engine braking. This increases the load on the engine during engine braking.

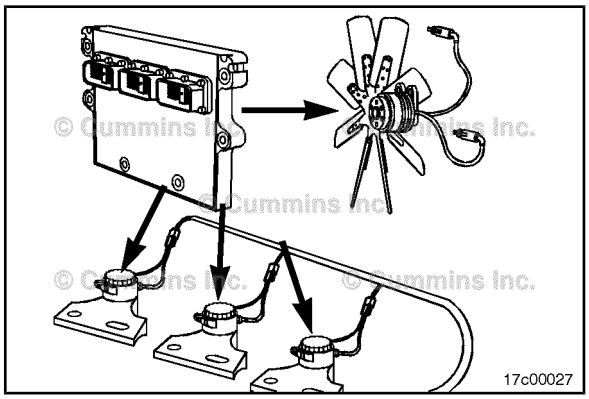

Diagnostic Fault Codes

Industrial Applications

The QSX15 fuel system can display and record certain detectable fault conditions. These failures are displayed as fault codes, which make troubleshooting easier. The fault codes are retained in the electronic control module (ECM).

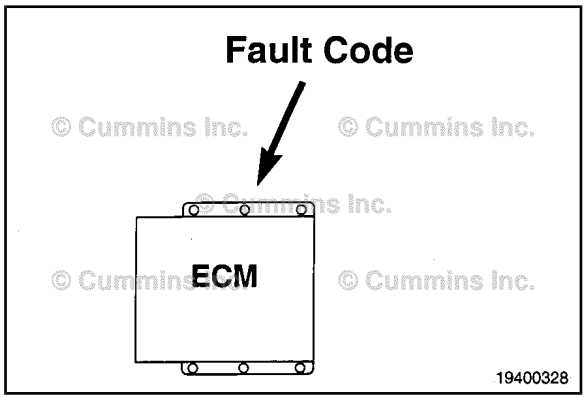

There are two types of fault codes. There are engine electronic fuel system fault codes and engine protection system fault codes.

All fault codes recorded will either be active (fault code is presently active on the engine) or inactive (fault code was active at some time, but is **not** presently active).

Diagnostic Fault Codes
•Engine Electronic Fuel System Fault Codes
•Engine Protection System Fault Codes.

Active fault codes can be read using the warning (amber) and stop lamps (red) in the cab panel or electronic service tool. Inactive fault codes can **only** be viewed with an electronic service tool.

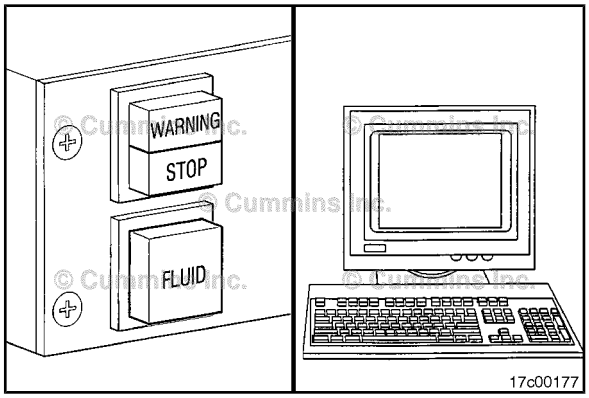

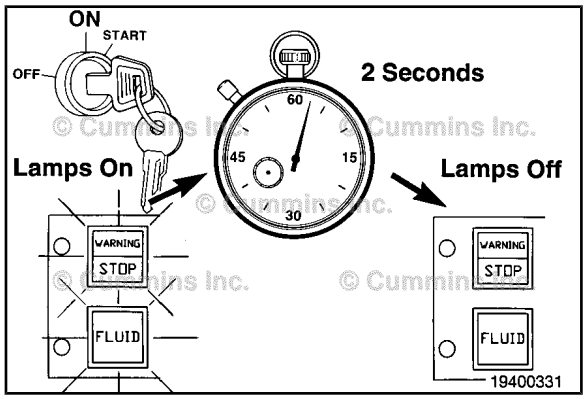

When the vehicle keyswitch is turned on and the diagnostic switch is off, the fault code lamps (red, yellow, and maintenance) will illuminate for approximately 2 seconds, one after the other, to check their operation.

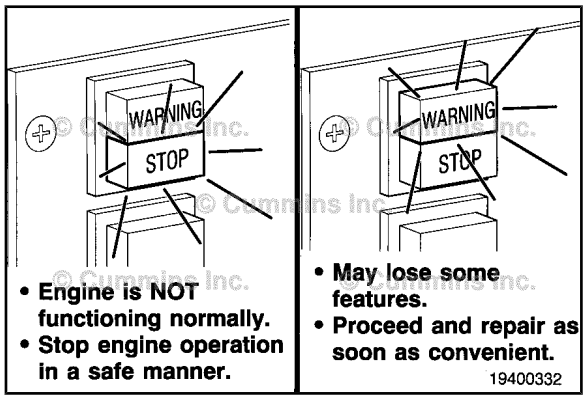

The lights will remain off until a fault code is recorded. If a stop (red) light comes on while the engine is in operation, the fault can be engine-disabling. Stop the engine in a safe manner as soon as possible.

If the warning (amber) light illuminates, the engine can still be operated, but it can lose some system features that can sometimes result in a power loss. The failure **must** be repaired as soon as is convenient.

The engine protection system records separate fault codes when an out-of-range condition is found for any of the sensors in the engine protection system. Engine protection is **only** available when the engine protection feature is enabled.

- Coolant Temperature
- Coolant Level
- Intake Manifold Temperature
- Oil Pressure.

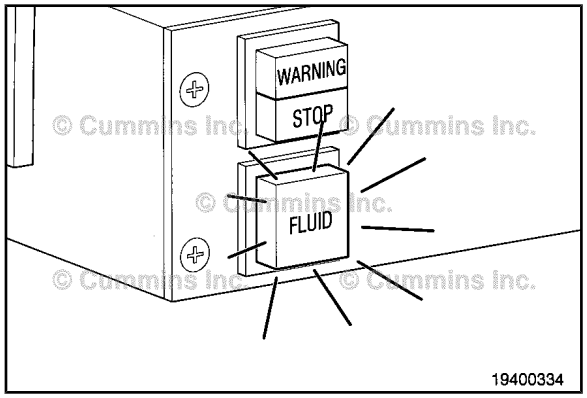

The engine protection system will light the maintenance lamp (orange) when an out-of-range condition occurs.

NOTE: Lamp colors and labels will vary by OEM.

If the engine protection maintenance lamp comes on while driving, it means that a fault code has been recorded. The light will remain on as long as the fault is occurring.

The light will begin to flash if the condition continues to get worse. The engine power and/or speed will be gradually reduced. If the engine protection shutdown feature is enabled, the engine will shut down to prevent engine damage.

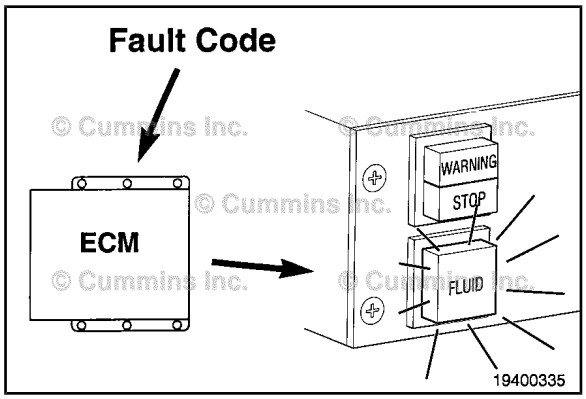

To check for active fault codes, first turn the vehicle keyswitch to the OFF position. Move the diagnostic switch to the ON position.

NOTE: Some OEMs use a shorting plug.

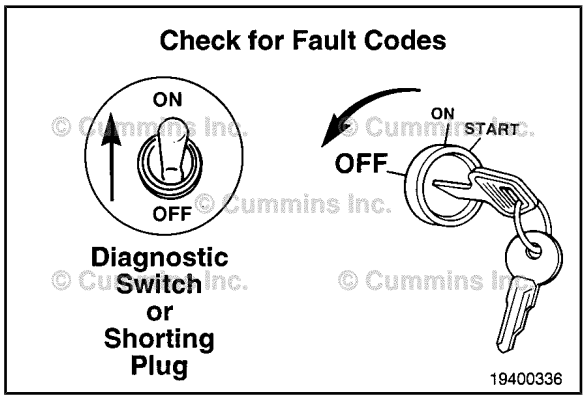

Turn the vehicle keyswitch to the ON position. If no active fault codes are recorded, all three lights will come on and stay on. If active fault codes are recorded, all three lights will come on momentarily. The amber (warning) and red (stop) lights will begin to flash the code of the recorded fault.

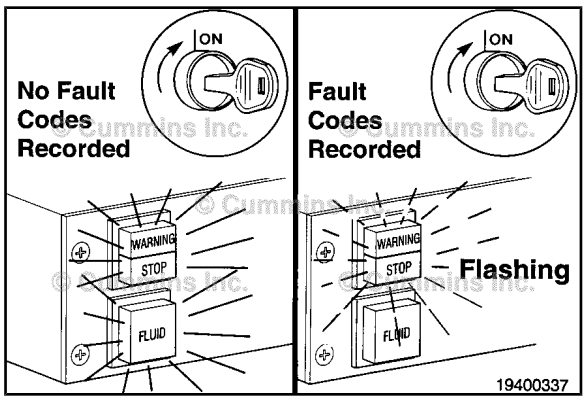

The fault code will flash in the following sequence. First, the amber (warning) lamp will flash. Then there will be a short 1-second pause when both the amber and red lights are off. Then the numbers of the recorded fault code will flash in red. There will be a 1-second pause between each number. When the number has stopped flashing, an amber light will appear again. The number will repeat in the same sequence.

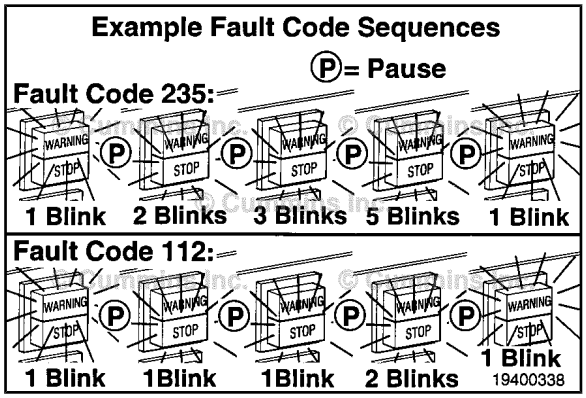

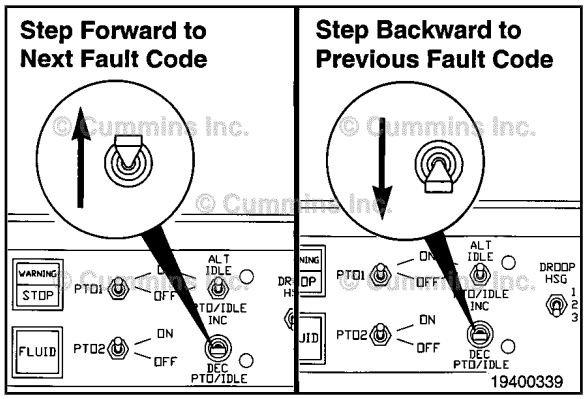

The lights will continue to flash the same fault code until the system has advanced to the next active fault code. To go to the second fault code, move the idle-speed adjust switch to " + ," then release it. You can also go back to the previous fault code by moving the switch to "-," then releasing it. To check the third or fourth fault code, move the switch to " + ," then release it when all active fault codes have been viewed. Moving the switch to " + " will go back to the first fault code.

The explanation and correction of all fault codes is in the troubleshooting charts of the QSX15 fuel manual. Refer to Troubleshooting and Repair Manual, Electronic Control System, Signature, ISX and QSX15 Engines, Bulletin No. 3666259.

Electronic fault code troubleshooting trees are in ascending numerical order. An index is located at the beginning of the section.

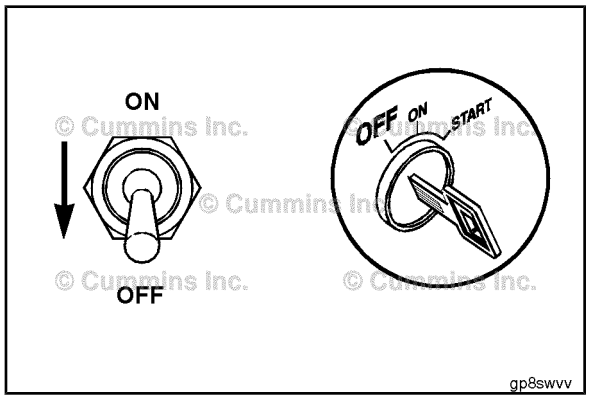

To stop the diagnostic system, move the diagnostic switch to the OFF position, or remove the shorting plug. Turn the vehicle keyswitch to the OFF position.

NOTE: Some OEMs use a shorting plug.

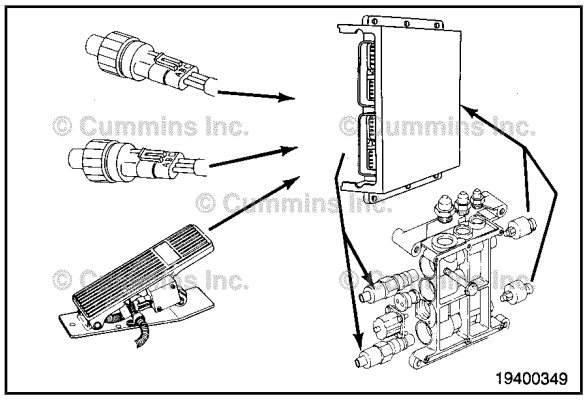

Fault Code Snapshot Data

When a diagnostic fault code is recorded in the ECM, ECM input and output data are recorded from all sensors and switches. Snapshot data allow the relationships between ECM inputs and outputs to be viewed and used during troubleshooting.

Power Generation

The QSX15 fuel system can display and record certain detectable fault conditions. These failures are displayed as fault codes, which make troubleshooting easier. The fault codes are retained in the ECM.

There are two types of diagnostic codes:

Information codes are to inform the operator and electronic system (paralleling controllers, smart switch gear) that an event has occurred.
Fault codes are to report to the operator and the electronic system that there is a problem or potential problem with the engine or fuel system.

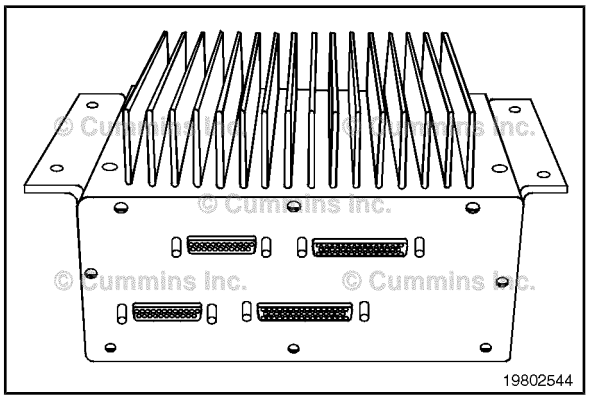

Fault codes can be accessed in three different ways:

1. Flash Out
2. Electronic Service Tool
3. Operator Interface Panel.

Generator-Drive Control System ECM Diagnostic Lamps

The generator-drive control system ECM has five LEDs for diagnostics. Typical lights will include:

1. OS - Overspeed
2. LOP - Low Oil Pressure
3. HET - High Engine Temperature
4. Shutdown - Engine Protection Shutdown Has Occurred
5. Warning - Engine Protection Warning Condition Exists.

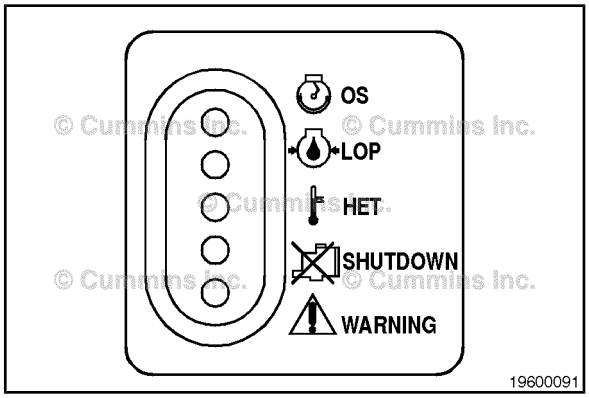

Generator-Drive Control System Relay Drivers

The generator-drive control system has seven relay drivers for customer-supplied relays.

- Overspeed
- Low Oil Pressure
- High Engine Temperature
- Engine Protection Shutdown Has Occurred
- Engine Protection Warning Condition Exists
- Prelow Oil Pressure
- Prehigh Engine Temperature.

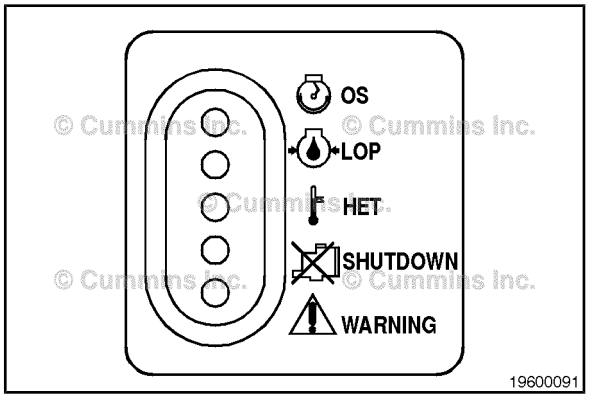

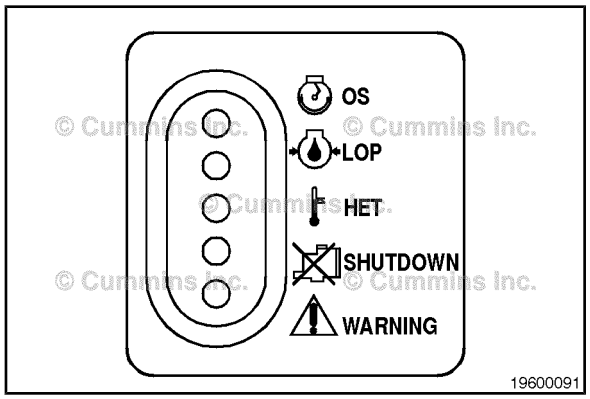

Fault Code Flash-out

To “flash out” a fault code, the ECM **must** be put into the diagnostic mode. Enter the diagnostic mode by removing the diagnostic connector shorting the plug from the engine harness, turning the plug, and reinserting it, or using the diagnostic mode switch.

The warning lamp will flash (signifying the start of a new fault code), and then the fault code will flash out on the shutdown lamp.

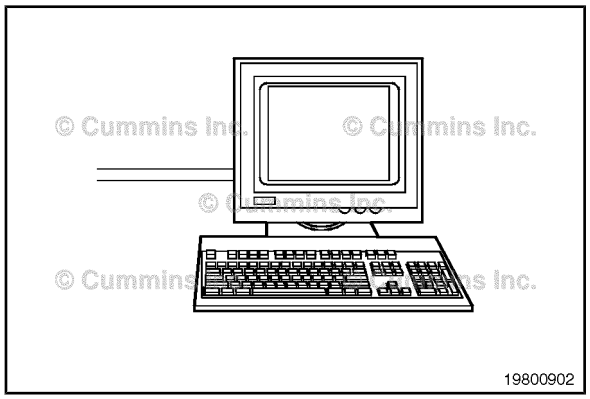

Fault Codes - Electronic Service Tool

The electronic service tool can be used to read the fault codes. Connect a personal computer, with the electronic service tool installed, to the engine using the service harness, Part No. 3163156. Refer to the electronic service tool manual for specifics about how to use the tool to read the fault codes.

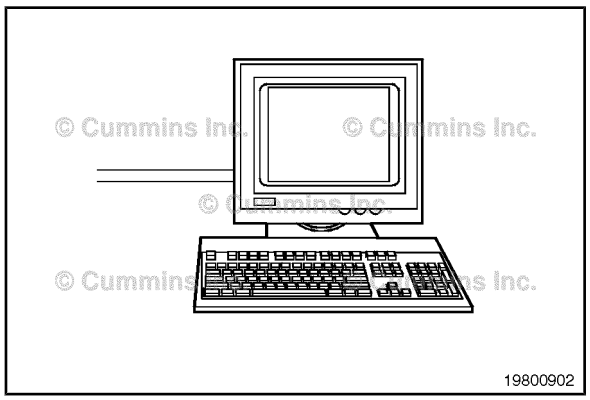

Fault Code - Operator Interface Panel

If the customer supplied an operator interface panel, it has been integrated with the generator-drive control system using the RS485 datalink. The ability to display fault codes is one plus of this panel; refer to the manuals supplied with the unit for more details.

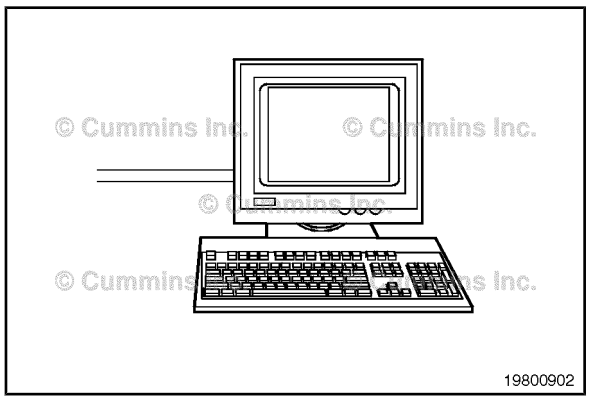

Fault Code Snapshot Data\

When a diagnostic fault code is recorded in the ECM, the ECM input and output data are recorded from all sensors and switches. Snapshot data allow the relationships between ECM inputs and outputs to be viewed and used during troubleshooting.

To Clear a Fault Code

Only inactive fault codes can be cleared. There are two ways to clear an inactive fault code:

1. The reset switch on the operator interface panel
2. The electronic service tool.

NOTE: The engine **must** be shut down to clear inactive shutdown faults.

All fault codes recorded will either be active (fault code is presently active on the engine) or inactive (fault code was active at some time, but is **not** presently active).

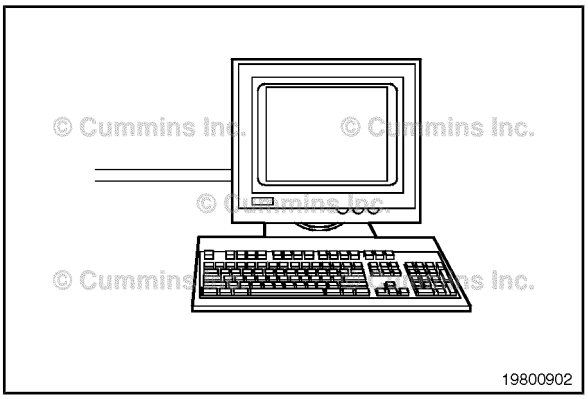

Engine Protection System

QSX15 engines are equipped with an engine protection system. The system monitors critical engine temperatures and pressures and will log diagnostic faults when an abnormal operating condition occurs. If an out-of-range condition exists and engine derate action is to be initiated, the operator will be alerted by an in-cab warning light. The warning light will blink or flash when out-of-range conditions continue to worsen. The driver **must** pull to the side of the road, when it is safe to do so, to reduce the possibility of engine damage.

NOTE: Engine power and speed will be gradually reduced, depending on the level of severity of the observed condition. The engine protection system will **not** shut down the engine unless the engine protection shutdown feature has been selected. If the feature has been selected and the engine does shut down, the engine can be started again by turning off the keyswitch and then turning it back on.

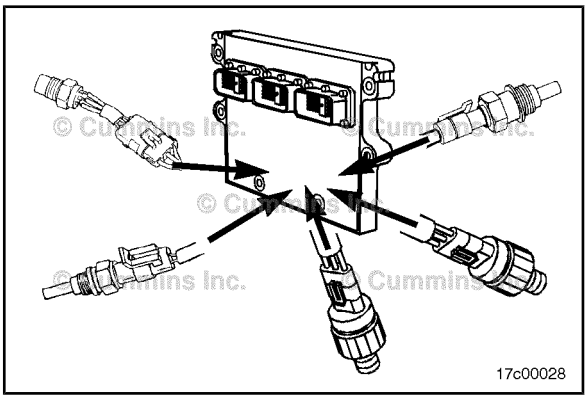

Fuel System Description

The QSX15 electronically controlled fuel system consists of:

1. Fuel shutoff valve
2. Oil pressure/temperature sensor
3. Intake manifold pressure/temperature sensor
4. Cooling plate (behind ECM)
5. Electronic control module
6. Fuel in
7. Fuel out
8. ECM actuator harness port (industrial only)
9. ECM OEM harness port (industrial only).

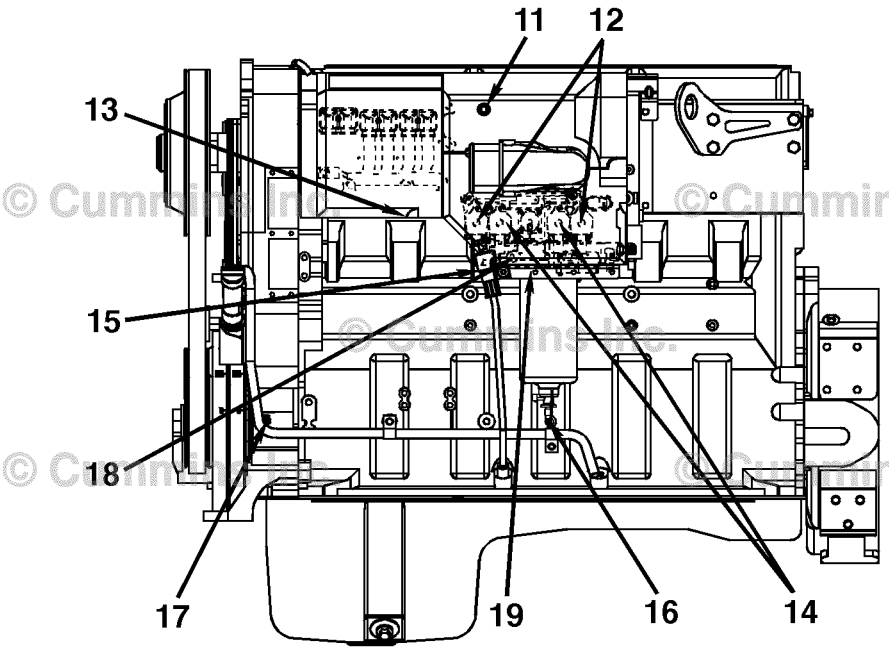

19c00617

The QSX15 electronically controlled fuel system consists of:

1. Camshaft Position Sensor
2. Fueling Actuators
3. Ambient Air Pressure Sensor
4. Timing Actuators
5. Fuel Pressure Sensor
6. Water-in-Fuel Separator
7. Crankshaft Position Sensor
8. Front and Rear Rail Pressure Sensor
9. Fuel Inlet Restriction Sensor
10. Coolant Level Sensor (In Radiator) - Optional*.

* Not in this view.

Electronic Control Module (ECM) Dataplate

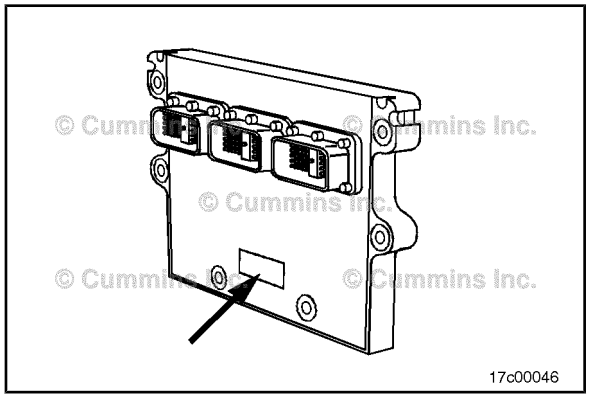

17c00046

Industrial

The data tag for the ECM is located on the front of the module housing.

Power Generation

The data tag for the ECM is located on the side of the ECM opposite the ECM connectors.

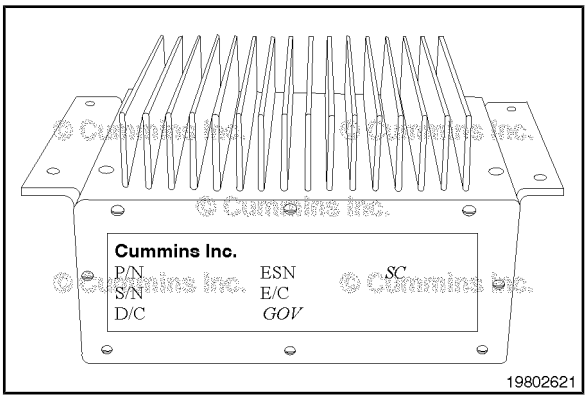

Electronic Control Module Inputs

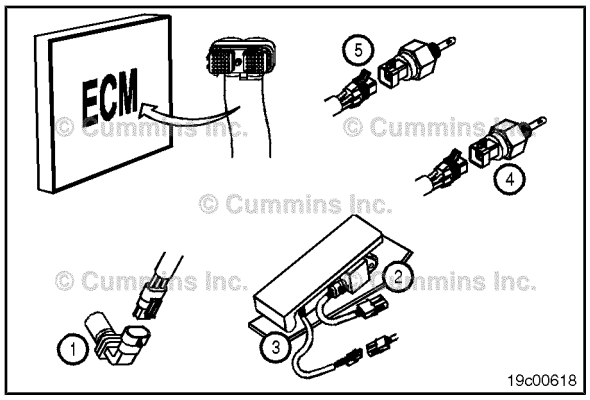

Electronic Control Module (ECM) Inputs:

1. Engine Camshaft or Crankshaft Position Sensor
2. Throttle Position Sensor (industrial **only**)*
3. Idle Validation Switch*

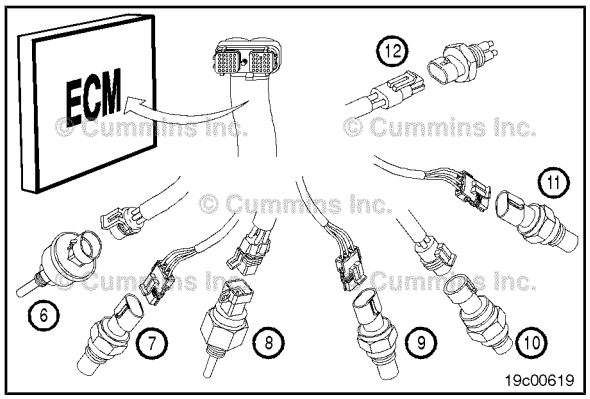

6. Coolant Level Sensor*
7. Ambient Air Pressure Sensor
8. Oil Pressure/Temperature Sensor
9. Wet Tank Pressure Sensor*
10. Unintended Fuel Diagnostic Sensor (industrial **only**)
11. Fuel Pressure Sensor
12. Water-in-Fuel Sensor (industrial **only**).

*These are OEM sensors that are **not** installed on the engine.

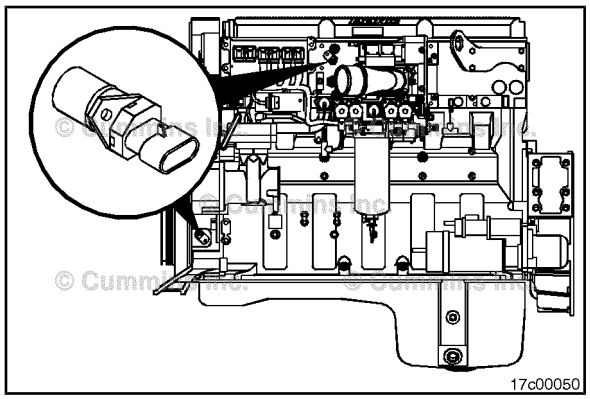

The engine cam and crank position sensors provide engine speed and position information.

The cam position sensor is located between the ECM and fuel pump. The crank position sensor is located below the air compressor drive or the barring device.

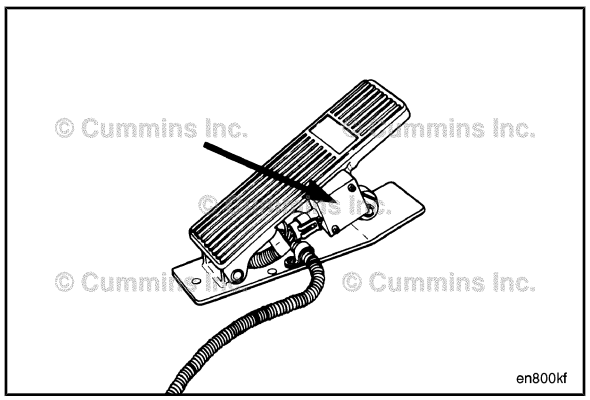

The throttle position sensor (industrial **only**) is located in the throttle foot pedal assembly. When the foot pedal is at idle, the engine brakes can be activated. When the throttle pedal is depressed, the sensor deactivates the engine brakes and the PTO. The accelerator pedal can override the cruise control and PTO (if the throttle override in PTO is enabled).

The idle validation switch is added to the throttle pedal assembly and will verify that the throttle pedal is in the low-idle position.

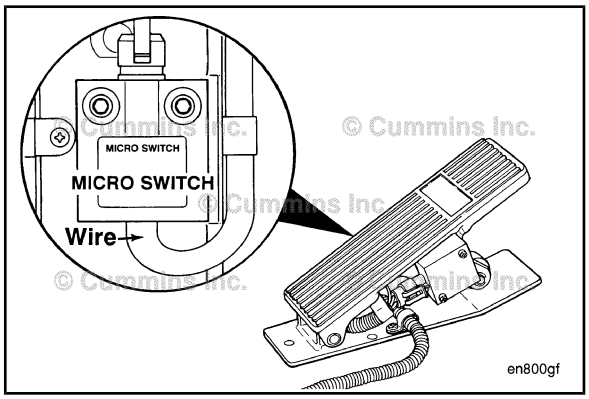

The intake air pressure/temperature sensor, located in the front of the intake air connection, monitors positive manifold pressure and turbocharged intake air temperature. Both are used in the fuel control function. The intake air pressure/temperature sensor is also used in the engine protection system.

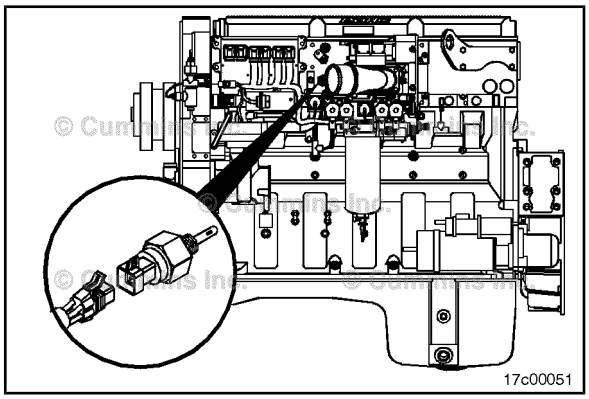

The engine coolant temperature sensor , located in the thermostat housing, monitors engine coolant temperature used in the fuel control function and engine protection system.

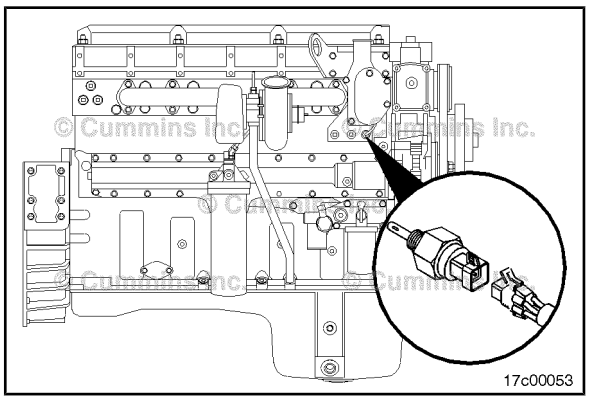

The coolant level sensor is mounted in the radiator top tank or surge tank, depending on the OEM. It is a fluid-level-actuated switch required for the engine protection system.

NOTE: This is an optional sensor that will or will **not** be on all vehicles.

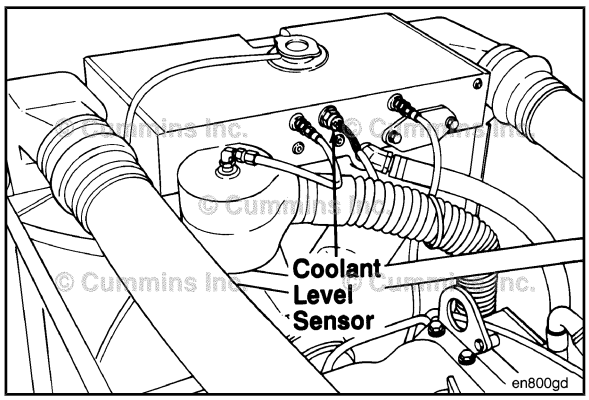

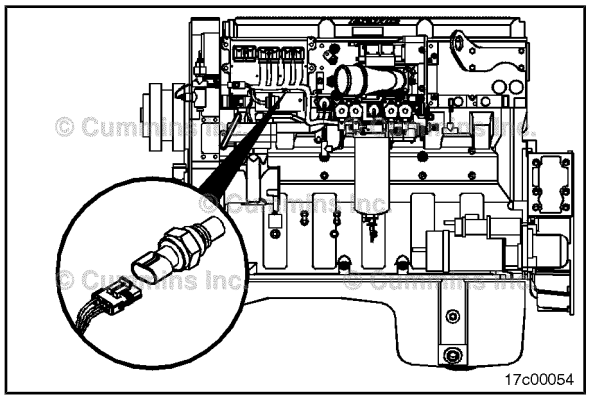

The ambient air pressure sensor is located on the fuel pump side of the engine, just below the ECM. It is used to control fueling.

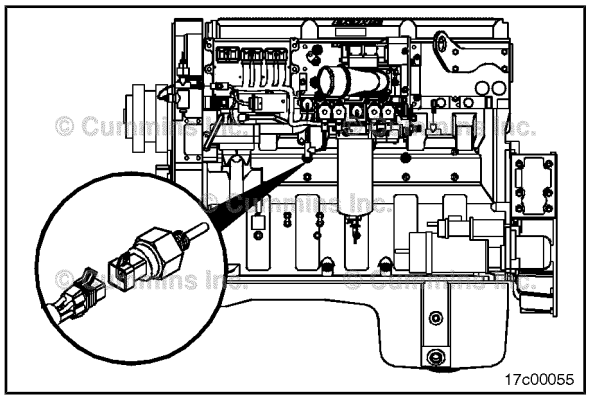

The oil pressure/temperature sensor , located on the fuel pump side of the engine, monitors lubricating oil pressure and temperature for the engine protection system.

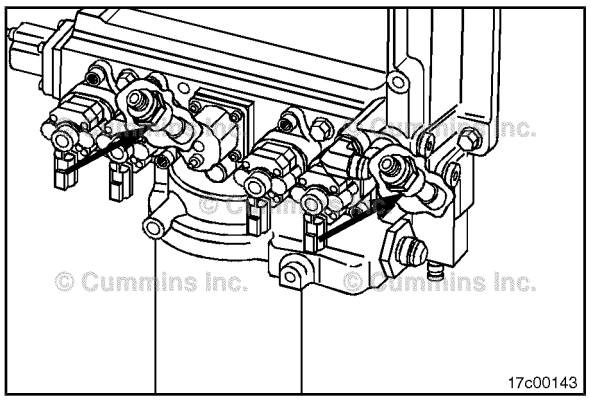

The unintended fuel diagnostic sensors , located behind the fuel actuators on the integrated fuel system module, monitor the fuel actuator's passage pressure.

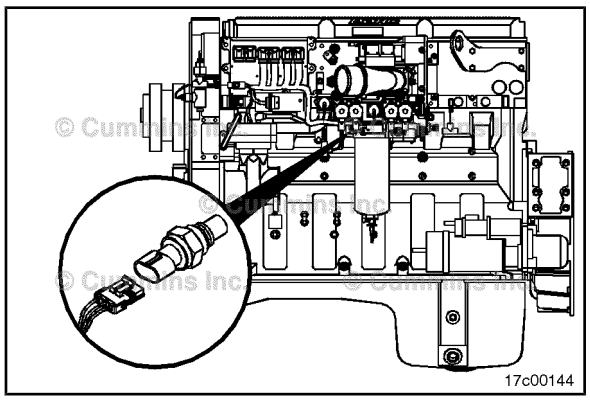

The fuel pressure sensor , located on the integrated fuel system module, monitors actuator supply rail pressure.

The water-in-fuel sensor , located on the fuel filter, monitors water in fuel.

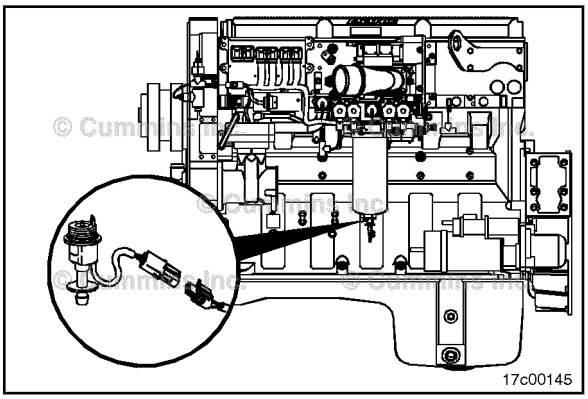

Electromagnetic Interference (EMI)

General Information

Some engine applications utilize accessories (CB radios, mobile transmitters, etc.) that generate and use radio frequency energy that, if **not** installed and used properly, can cause electromagnetic interference (EMI) conditions to exist between the accessory and Cummins electronic controlled fuel system. Cummins is **not** liable for any performance problems with either the fuel system or the accessory due to EMI. EMI is **not** considered by Cummins to be an engine failure and therefore is **not** warrantable.

System EMI Susceptibility

Your Cummins product has been designed and tested for minimum sensitivity to incoming electromagnetic energy. Testing has shown that there is no engine performance degradation at relatively high energy levels; however, if very high energy levels are encountered, then some noncritical diagnostic fault code logging can occur. The fuel system EMI susceptibility level will protect your engine from most, if **not** all, electromagnetic energy-emitting devices that meet the Federal Communications Commission legal requirements.

System EMI Radiation Levels

Your Cummins product has been designed to emit minimum electromagnetic energy. Electronic components are required to pass various Cummins and industry EMI specifications. Testing has shown that when the engine is properly installed, it will not interfere with onboard communication equipment or with the vehicle's, equipment's, or vessel's ability to meet any applicable EMI standards and regulated specifications.

If an interference condition is observed, follow the suggestions below to reduce the amount of interference:

1. Locate the receiving antenna as far away from the engine and as high as possible.
2. Locate the receiving antenna as far away as possible from all metal obstructions (e.g., exhaust stacks)
3. Consult a representative of the accessory supplier in your area to:
   - Calibrate accurately the device for proper frequency, power output, and sensitivity (both base and remote site devices **must** be properly calibrated)
   - Obtain antenna reflective energy data measurements to determine the optimum antenna location
   - Obtain optimum antenna type and mounting arrangement for your application
   - Make sure your accessory equipment model is built for maximum filtering to reject incoming electromagnetic noise.

Notes

Section 2 - Maintenance Guidelines

Section Contents

Page
Maintenance Guidelines - Overview 2-1
General Information....2-1
Maintenance Record Form 2-8
Maintenance Data....2-8
Maintenance Schedule 2-3
General Information....2-3
Oil Drain Intervals....2-3
All Others Without EGR....2-3
Tool Requirements 2-2
General Information....2-2
Automotive Applications....2-2

This Page Left Intentionally Blank

Maintenance Guidelines - Overview

General Information

Cummins Inc. recommends that the engine be maintained according to the Maintenance Schedule in this section.

If the engine is operating in ambient temperatures below -18°C [0°F] or above 38°C [100°F], perform maintenance at shorter intervals. Shorter maintenance intervals are also required if the engine is operated in a dusty environment or if frequent stops are made. Contact your local Cummins Authorized Repair Location for recommended maintenance intervals.

Some of these maintenance procedures require special tools or must be completed by qualified personnel. Contact your local Cummins Authorized Repair Location for detailed information.

If your engine is equipped with a component or accessory not manufactured by Cummins Inc., refer to the component manufacturer's maintenance recommendations.

Use the chart provided in this section as a convenient way to record maintenance performed.

Tool Requirements

General Information

Automotive Applications

Most of the maintenance operations described in this manual can be performed with common hand tools (metric and SAE wrenches, sockets, and screwdrivers).

The following is a list of special service tools required for some maintenance operations:

3400158	Coolant Filter Wrench
3400157	Oil and Fuel Filter Wrench
3164795	Torque Wrench
3163530	Brake Feeler Gauge - 7.00 mm [0.276 in]

Refer to the appropriate sections for a description of the tools and how to use them.

Contact your nearest Cummins Authorized Repair Location for the required service tools.

Maintenance Schedule

General Information

Daily or Refueling - Maintenance Check [1] .....Section 3
- Fuel-Water Separator - drain
- Lubricating Oil Level - check
- Coolant Level - check
- Fan, Cooling - check
- Drive Belts - check
- Air Intake Piping - check
- Charge-Air Piping - check
- Air Tanks and Reservoirs - drain
- Crankcase Breather Tube - check

Every 250 Hours, or 6 Months [1], [4] .....Section 4
- Lubricating Oil and Filters - change
- Supplemental Coolant Additive (SCA) and Antifreeze Concentration - check
- Fuel Filter (Spin-On Type) - change

Every 1,500 Hours, or 1 Year [2], [3] .....Section 5
- Coolant Filter - change
- Coolant Filter Head - Inspect for reuse
- Cooling Fan Belt Tensioner - check
- Air Leaks, Air Intake and Exhaust Systems - check
- Air Cleaner Restriction - check
- Engine Wiring Harness - check

Every 6,000 Hours, or 2 Years [3] .....Section 6
- Crankcase Breather Tube - check
- Radiator Hose - check
- Cold Weather Starting Aids - check
- Engine Steam Cleaning - clean
- Engine Mounting Bolts - check
- Vibration Damper, Viscous - inspect for reuse
- Overhead Set - adjust

Every 10,000 Hours, or 5 Years [3] .....Section 7
- Fan Hub, Belt Driven - replace
- Air Compressor Discharge Lines - check

Oil Drain Intervals

All Others Without EGR

Select oil drain interval based on oil classification for Recreational Vehicle, Refuse, Mixer, Dump, Delivery, Logging, Fire Truck or Crane vehicle applications.

Oil Classification	Kilometers	Miles	Hours	Months
CES 20071	11,500	7,000	300	6
CES 20076 and CES 20078, CES 20081 [1]	14,500	9,000	400	6

If your application is **not** one of the above, select the oil drain interval Severe Duty, Normal Duty, or Light Duty based on how you use your engine. See Oil Drain Intervals by severity km [mi] located in this section.

- Follow oil drain interval Severe Duty if your vehicle operates under either of the conditions listed in interval Severe Duty.
- Follow oil drain interval Normal Duty if your vehicle operates under either of the conditions listed in interval Normal Duty and does **not** meet any of the conditions listed in interval Severe Duty.
- Follow oil drain interval Light Duty if your vehicle operates under both of the conditions listed in interval Light Duty and does **not** meet any of the conditions listed in interval Severe Duty or interval Normal Duty.

1. When used with ultra-low sulfur diesel fuel (15 ppm sulfur). If the sulfur content of the fuel is greater than 15 ppm, the oil change intervals **must** be reduced by 20 percent.

1. When used with ultra-low sulfur diesel fuel (15 ppm sulfur). If the sulfur content of the fuel is greater than 15 ppm, the oil change intervals **must** be reduced by 20 percent.

Oil Classification	Severe Duty	Normal Duty	Light Duty
	< 2.3 km/liter [5.5 mpg] or > 36,287 kg [80,000 lb] gross vehicle weight	**2.3 to 2.8 km/liter [5.5 to 6.5 mpg] or 36,287 kg [80,000 lb] gross vehicle weight**	**> 2.8 km/liter [6.5 mpg] or < 31,751 kg [70,000 lb] gross vehicle weight**
CES 20071	24,000 km [15,000 mi]	56,500 km [35,000 mi]	72,500 km [45,000 mi]
CES 20076 and CES 20078, CES 20081 [1]	32,000 km [20,000 mi]	64,500 km [40,000 mi]	80,500 km [50,000 mi]

NOTE: Extending the oil and filter change interval beyond the recommendation will decrease engine life due to factors such as corrosion, deposits, and wear.

NOTE: If the sulfur content of the fuel is greater than 0.50 percent, the oil change intervals **must** be reduced by an additional 20 percent.

For industrial engines, the oil drain intervals are based on the duty cycle (as reflected by fuel consumption) and lubricating oil quality. The table below specifies the maximum oil drain interval for the listed lubricating oil classifications based on the three different duty cycles: Heavy, Medium, and Light.

- Follow oil drain interval Heavy Duty if your equipment uses more than 57 liter [15 gal] of fuel per hour.
- Follow oil drain interval Medium Duty if your equipment uses between 42 to 57 liter [11 to 15 gal] of fuel per hour.
- Follow oil drain interval Light Duty if your equipment uses less than 42 liter [11 gal] of fuel per hour.

NOTE: Extending the oil and filter change interval beyond the recommendation will decrease engine life due to factors such as corrosion, deposits, and wear.

Duty Cycle (Fuel Consumption)			
Oil Classification	**Heavy >57 liters/hour [15 gallons/hour]**	**Medium 42 to 57 liters/ hour [11 to 15 gallons/ hour]**	**Light < 42 liters/hour] [11 gallons/hour]**
API CD-4, CE-4, CF-4 [1, 3]	125	250	375
API CG-4 [3]	250	375	500
API CH-4 [3]	400	525	650
CES 20076/CH-4 [2, 3]	500	625	750

NOTE:

1. The oil classifications CD, CE, and CF have been obsoleted by API and **must not** be used, as their specifications are no longer controlled.
2. Valvoline Premium Blue and Premium Blue 2000 meet CES 20076 standards.
3. Refer to Procedure 018-003, Lubricating Oil Recommendations and Specifications, the lubricating oil filter specification table in Section V.

The table below list typical duty cycles by application.

NOTE: The actual duty cycle can vary from the below chart. In those cases, it is necessary to change the lubricating oil as a function of average fuel consumption. Therefore, select a column based on the representative fuel consumption range.

Typical Duty Cycles by Applications		
Heavy	**Medium**	**Light**
Air Compressor	Articulated Dump Truck	Crane
Combine	Irrigation Equipment	Rear Dump Truck
Dozer	Scraper	
Dragline	Skidder	
Excavator		
Farm Tractors		
Forage Harvester		
Rock Drill		
Tub Grinder		

For Generator Drive engines, this service interval is based on load factor (as reflected by fuel usage), lubricating oil quality, lubricating system capacity, and operating speed 1,500 rpm (50 Hz) or 1,800 rpm (60 Hz). Premium grade oils (API CG-4, CH-4, and CES 20076) are recommended for the QSX15 engine. The oil grades CD, CE, and CF have been obsoleted by API and **must not** be used, as their specifications are no longer controlled. There are two recommended methods for determining the proper oil change interval:

- Fixed hour method; based on fixed hours of operation or months of service, whichever occurs first.
- Chart method; based on known fuel consumption rates.

If the chart method is **not** used or, for all stand-by power applications, the oil **must** be changed at a regular interval or 12 months, whichever occurs first:

Operating Speed	Sump Size	Change Interval
1,500 rpm (50 Hz)	45 liters [12 gal]	125 Hours or 12 Months
	45 liters [12 gal]	250 Hours or 12 Months
1,800 rpm (60 Hz)	95 liters [25 gal]	250 Hours or 12 Months
	95 liters [25 gal]	500 Hours or 12 Months

The chart method is recommended to provide the lowest total cost of operation while still protecting the engine. Due to differing availability outside North America, lower grade oil (CD, CE, and CF) are also depicted, however their classifications have been obsoleted by API, and oil change intervals are greatly reduced.

The charts **must** be used as guidelines because actual oil drain intervals will also depend on operation and maintenance practices. It is suggested that oil analysis **must** be used periodically for prime power applications (every 100 hours) to make sure the proper oil change interval is being applied.

To use the charts, locate the chart for the appropriate sump size and operating speed. Find the fuel consumption rate in U.S. gallons per hour or liters per hour on the left vertical axis. Draw a horizontal line from left to right across the chart, parallel with the bottom of the chart, until it intersects the curve.

From the intersection point on the curve, draw a line perpendicular to the bottom of the chart. The number the line intersects across the bottom of the chart represents the recommend oil change interval in hours.

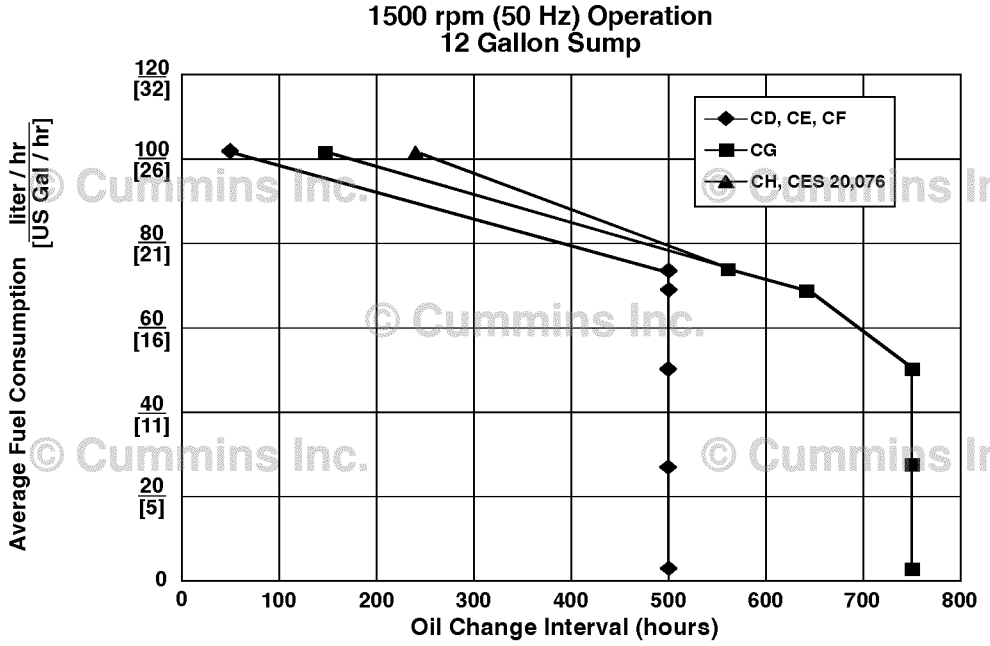

17c00173

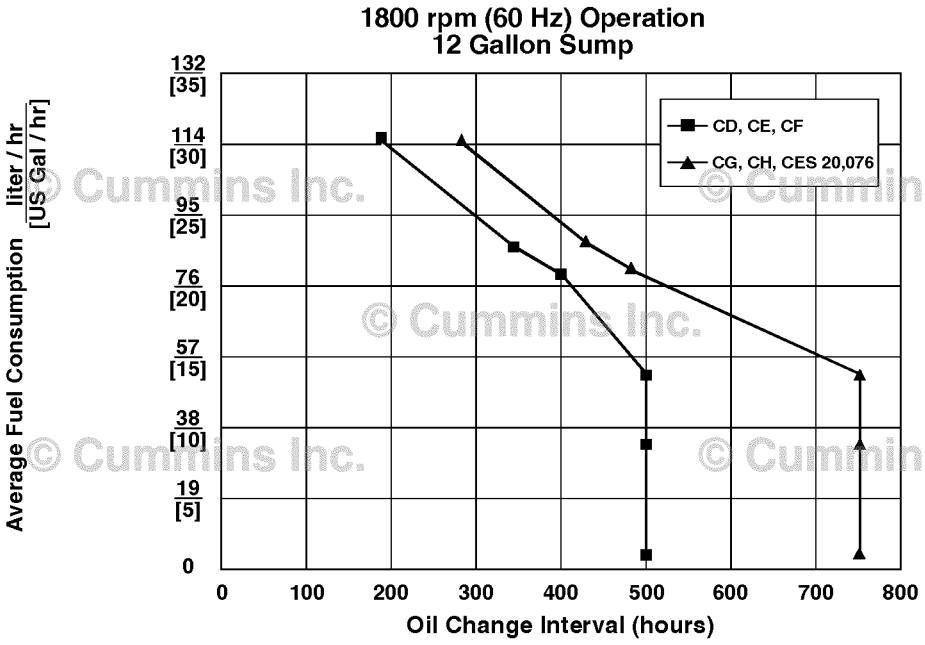

17c00174

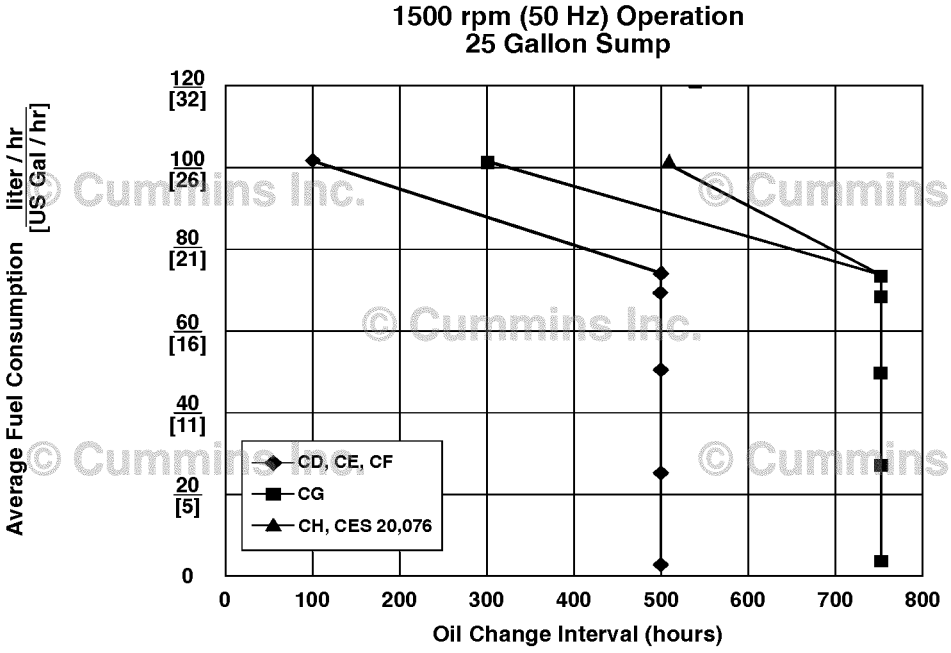

17c00175

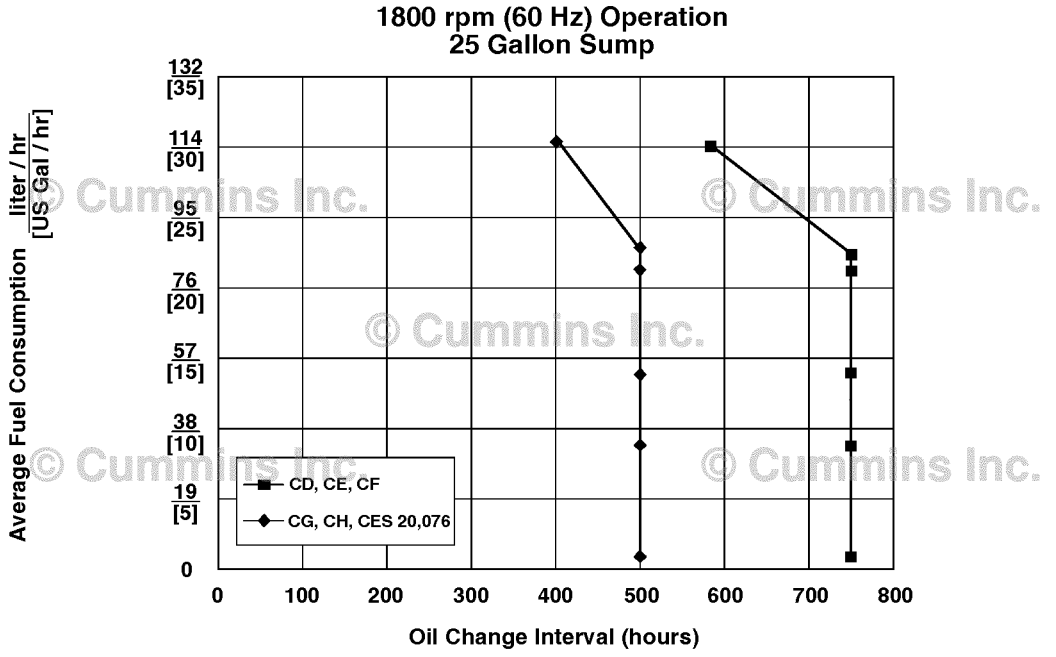
1800 rpm (60 Hz) Operation
25 Gallon Sump
Average Fuel Consumption liter / hr [US Gal / hr]
132 [35]
114 [30]
95 [25]
76 [20]
57 [15]
38 [10]
19 [5]
0
0
100
200
300
400
500
600
700
800
Oil Change Interval (hours)
CD, CE, CF
CG, CH, CES 20,076
© Cummins Inc.
© Cummins Inc.
© Cummins Inc.
© Cummins Inc.

17c00176

Maintenance Record Form

Maintenance Data

Maintenance Record	
Engine Serial No.:	Engine Model:
Owner's Name:	Equipment Name/Number:

Key to table headings:
A = Date
B = km [Miles], Hours or Time Interval
C = Actual km [Miles] or Hours
D = Maintenance Check Performed
E = Check Performed By
F = Comments

A	B	C	D	E	F

Section 3 - Maintenance Procedures at Daily Interval

Section Contents

Page
Air Intake Piping 3-6
Maintenance Check....3-6
Air Tanks and Reservoirs 3-7
Drain....3-7
Charge-Air Piping 3-6
Maintenance Check....3-6
Coolant Level 3-3
Maintenance Check....3-3
Crankcase Breather Tube 3-7
Maintenance Check....3-7
Daily Maintenance Procedures - Overview 3-1
Engine Operation Report....3-1
General Information....3-1
Unusual Engine Noise....3-1
Drive Belts 3-5
Maintenance Check....3-5
Poly-Vee Belt....3-5
Cogged Belt....3-5
Fan, Cooling 3-4
Inspect for Reuse....3-4
Fuel-Water Separator 3-2
Drain....3-2
Canister Type....3-2
Spin-on Type....3-2
Lubricating Oil Level 3-3
Maintenance Check....3-3

This Page Left Intentionally Blank

Daily Maintenance Procedures - Overview

General Information

Preventative maintenance begins with day-to-day awareness of the engine and its system. Before starting the engine, check the oil and coolant levels. Look for:

- Leaks
- Loose or damaged parts
- Worn or damaged belts
- Any change in engine appearance.
- Odor of fuel

Engine Operation Report

The engine **must** be maintained in top mechanical condition if the operator is to get optimum satisfaction from its use. The maintenance department needs daily running reports from the operator to make necessary adjustments in the time allocated. The daily running report also helps to make provisions for more extensive maintenance work as the reports indicate the necessity.

Comparison and intelligent interpretation of the daily report, along with a practical follow-up action, will eliminate most failures and emergency repairs.

Report to the maintenance department any of the following conditions:

- Low lubricating oil pressure
- Low power
- Power increases or engine surge
- Erratic or no accelerator control or response
- Any warning lights flashing or staying on
- Abnormal water or oil temperature
- Unusual engine noise
- Excessive smoke
- Excessive use of coolant, fuel, or lubricating oil
- Any fuel, coolant, or lubricating oil leaks
- Loose or damaged parts
- Worn or damaged belts

Unusual Engine Noise

During daily maintenance checks, listen for any unusual engine noise that can indicate that service is required.

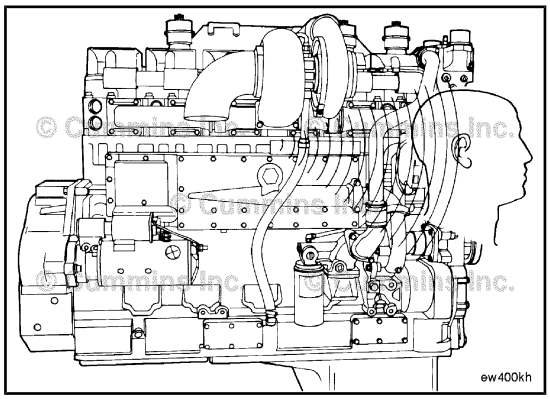

Fuel-Water Separator

Drain

⚠WARNING⚠

Drain the water-fuel separator into a container and dispose of in accordance with local environmental regulations.

Cummins Inc. requires a fuel-water separator or fuel filter be installed in the fuel supply system.

Drain the water and sediment from the separator daily.

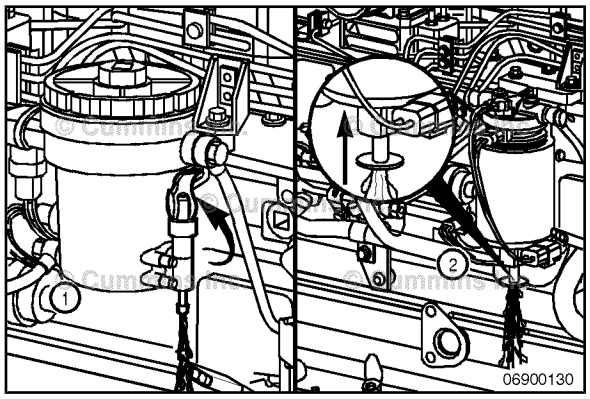

Canister Type

Shut off the engine.

Pull up on the drain valve lever until fluid drains out of the drain tube. Drain the filter sump until clear fuel is visible.

Push up on the drain valve until fluid drains out of the drain tube.

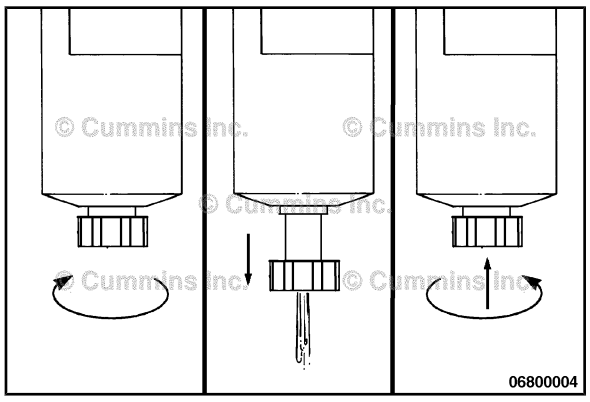

Spin-on Type

Shut off the engine.

Use your hand to open the drain valve. Turn the valve **counterclockwise** approximately 3½ turns until the valve drops down 25.4mm [1 in] and draining occurs.

Drain the filter sump until clear fuel is visible.

△CAUTION△

When closing the drain valve, do not overtighten the valve. Overtightening can damage the threads.

To close the valve, lift the valve and turn **clockwise** until it is hand-tight.

Lubricating Oil Level

Maintenance Check

⚠CAUTION⚠

Never operate the engine with oil level below the L (low) mark or above the H (high) mark. Poor engine performance or engine damage can occur.

The engine **must** be level when checking the oil level to make sure the measurement is correct.

Shut off the engine for an accurate reading.

Wait at least 15 minutes after shutting off the engine to check the oil level. This allows time for the oil to drain into the oil pan.

For additional lubricating oil recommendations and oil pan capacity information, refer to Maintenance Specifications (Section V).

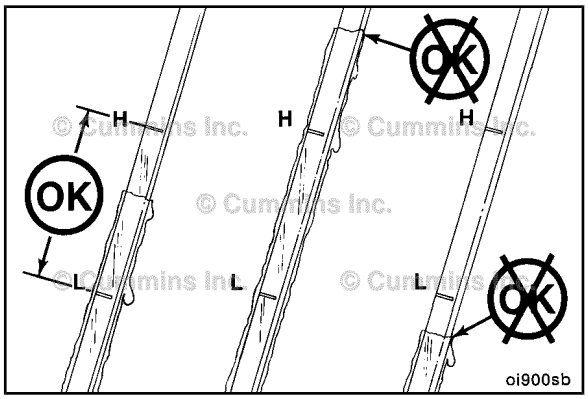

Coolant Level

Maintenance Check

⚠WARNING⚠

Do not remove a pressure cap from a hot engine. Wait until the coolant temperature is below 50°C [120°F] before removing the pressure cap. Heated coolant spray or steam can cause personal injury.

⚠CAUTION⚠

Never use a sealing additive to stop leaks in the cooling system. This can result in cooling system plugging and inadequate coolant flow, causing the engine to overheat.

The coolant level **must** be checked daily.

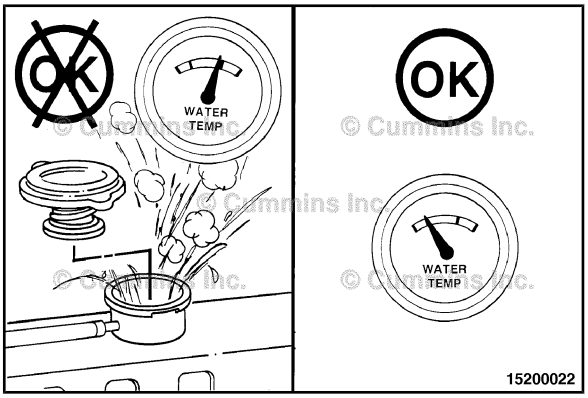

⚠CAUTION⚠

Do not add cold coolant to a hot engine. Engine castings can be damaged. Allow the engine to cool to below 50°C [120°F] before adding coolant.

Make up coolant added to the engine **must** be mixed with the correct proportions of antifreeze, supplemental coolant additive, and water to avoid engine damage.

Coolant recommendations and specification details on correct mixing of coolant can be found in Maintenance Specifications (Section V).

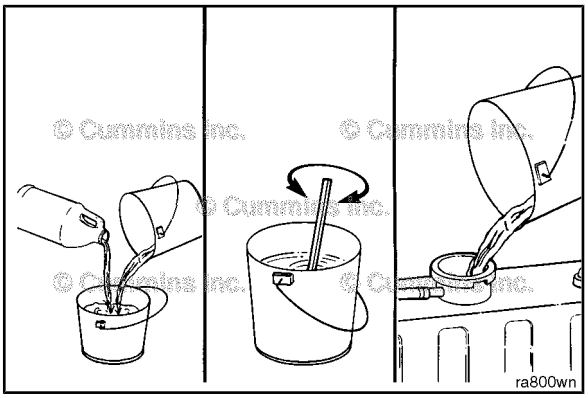

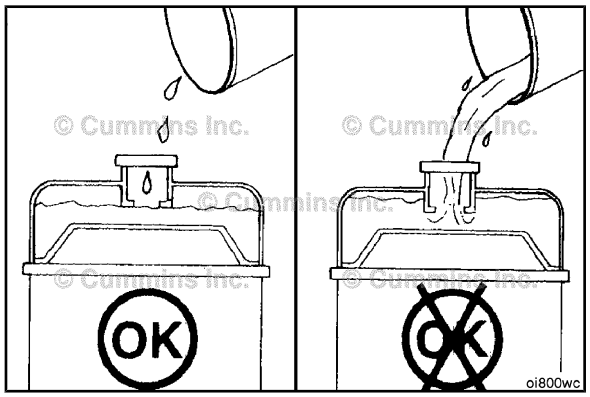

Fill the cooling system with coolant to the bottom of the fill neck in the radiator fill or expansion tank.

NOTE: Some radiators have two fill necks, both of which **must** be filled when the cooling system is drained.

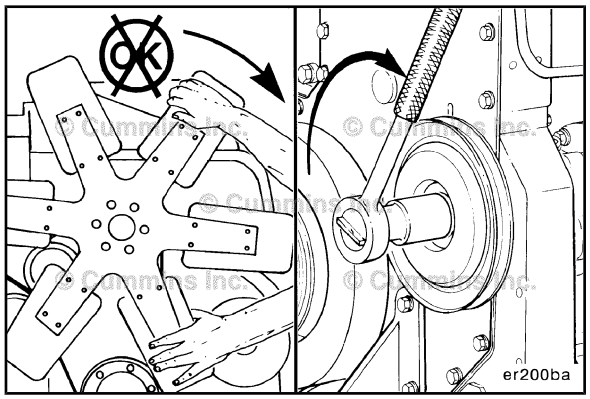

Fan, Cooling

Inspect for Reuse

⚠WARNING⚠

Do not rotate the engine by pulling or prying on the fan. The fan blade(s) can be damaged and cause the fan to fail and cause personal injury or property damage. Use the accessory drive shaft or the crankshaft barring tool to rotate the crankshaft.

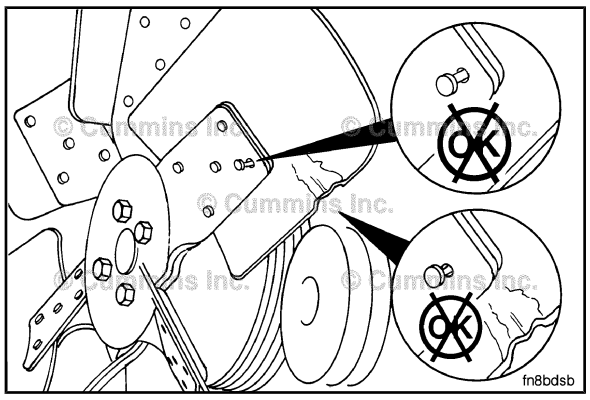

A visual inspection of the cooling fan is required daily. Check for cracks, loose rivets, and bent or loose blades. Check the fan to make sure it is securely mounted. Tighten the capscrews, if necessary.

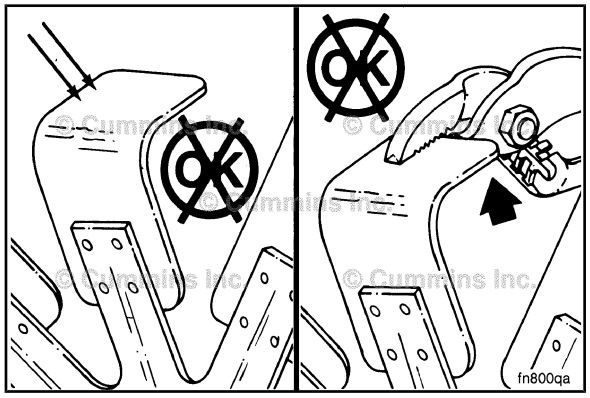

⚠WARNING⚠

Do not straighten a bent fan blade or continue to use a damaged fan. A bent or damaged fan blade can fail during operation and cause personal injury or property damage.

Replace original equipment fan that is damaged with a fan of the identical part number. Cummins Inc. **must** approve any other fan changes to be covered under warranty.

Refer to the vehicle or equipment manufacturer's specifications for capscrew torque.

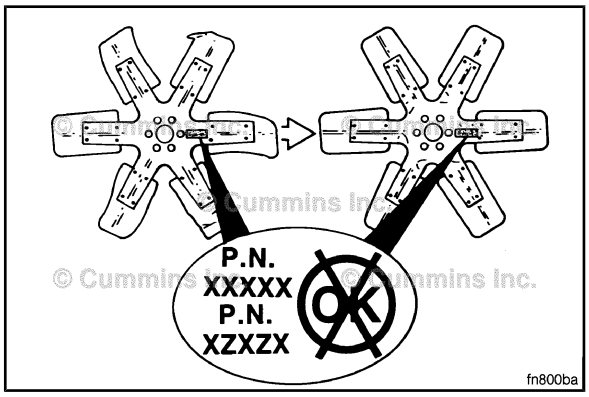

Drive Belts

Maintenance Check

Poly-Vee Belt

Inspect the belts daily. Check the belt for intersecting cracks. Traverse (across the belt width) cracks are acceptable. Longitudinal (direction of belt length) cracks that intersect with transverse cracks are **not** acceptable. Replace the belt if it is frayed or has pieces of material missing. Refer to Section A for belt adjustment and replacement procedures.

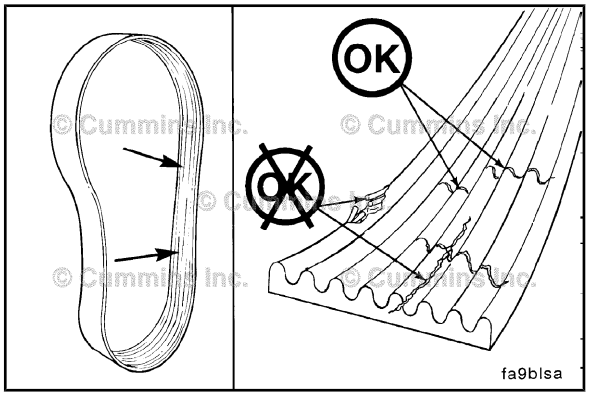

Belt damage can be caused by:

- Incorrect tension
- Incorrect size or length
- Pulley misalignment
- Incorrect installation
- Severe operating environment
- Oil or grease on the side of belts.

Cogged Belt

Inspect the belts daily. Replace the belts if they are cracked, frayed, or have chunks of material missing. Small cracks are acceptable.

Adjust the belts that have a glazed or shiny surface, which indicates belt slippage. Correctly installed and tensioned belts will show even pulley and belt wear. Refer to Section A for belt adjustment and replacement procedures.

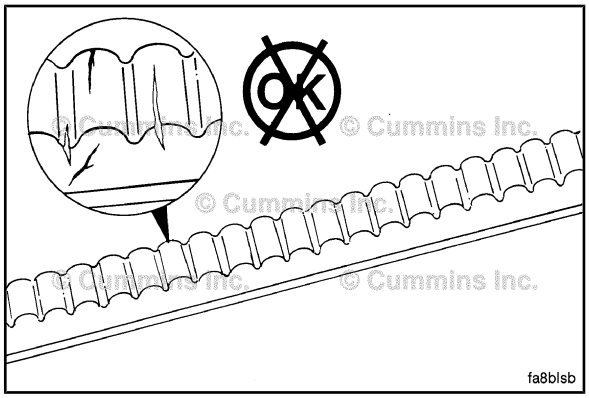

Belt damage can be caused by:

- Incorrect tension
- Incorrect size or length
- Pulley misalignment
- Incorrect installation
- Severe operating environment
- Oil or grease on the belts

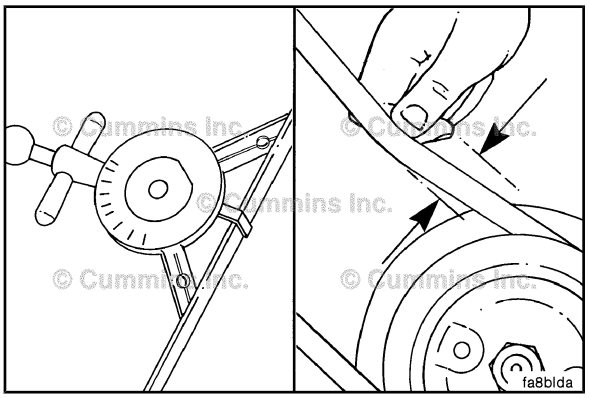

Measure the belt tension in the center span of the pulleys.

Refer to the Belt Tension Chart in Section V for the correct gauge and tension value for the belt width used.

An alternate method (deflection method) can be used to check belt tension by applying 110 N [25 lbf] force between the pulleys on v-belts. If the deflection is more than one belt thickness per foot of pulley center distance, the belt tension **must** be adjusted.

Refer to Section A for adjustment procedures.

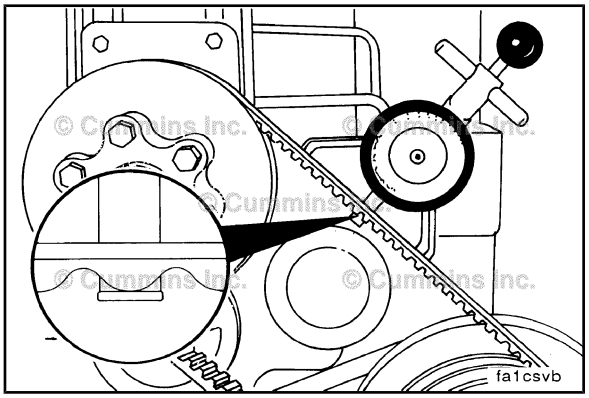

For cogged belts, **make sure** that the belt tension gauge is positioned so that the center tensioning leg is placed directly over the high point (hump) of a cog. Other positioning will result in incorrect measurement.

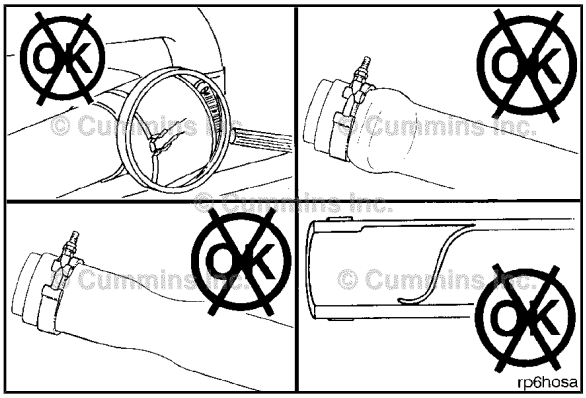

Air Intake Piping

Maintenance Check

Visually inspect the intake piping daily for wear points and damage to piping, loose clamps, or punctures that can damage the engine.

Replace damaged pipes, and tighten loose clamps, as necessary, to prevent the air system from leaking.

Torque Value: 8 N•m [72 in-lb]

Check for corrosion under the clamps and hoses of the intake system piping. Corrosion can allow corrosive products and dirt to enter the intake system. Disassemble and clean, as required.

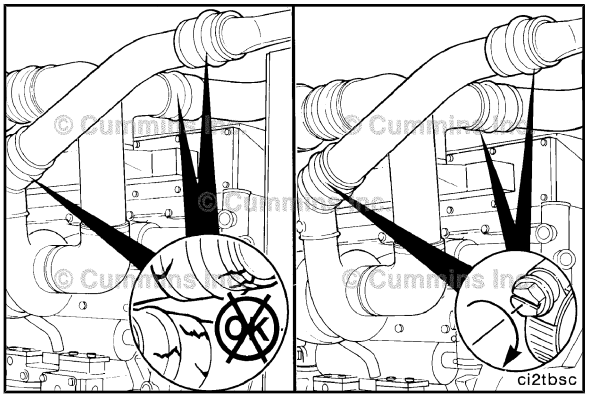

Charge-Air Piping

Maintenance Check

Inspect the charge-air piping and hoses for leaks, holes, cracks, or loose connections. Tighten the hose clamps if necessary. Refer to the vehicle or equipment manufacturer's specifications for the correct torque value.

Air Tanks and Reservoirs

Drain

If automatic purging or spitter valves are used, confirm the valves are operating correctly. If a manual drain valve is used on the wet tank, open the draincock on the wet tank to drain any moisture accumulated in the air system. If oil is present, the air compressor system **must** be checked. Contact your Cummins Authorized Repair Location.

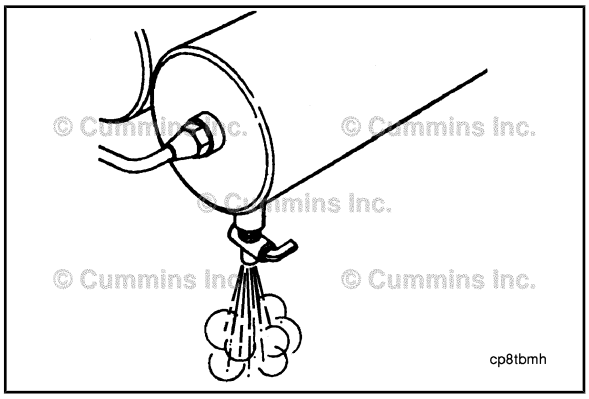

Crankcase Breather Tube

Maintenance Check

Inspect the breather tube for sludge, debris, or ice in the tube.

Inspect the tube more frequently in icy conditions.

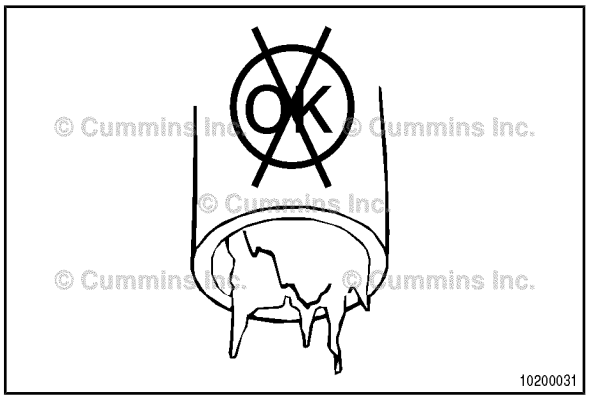

Notes

Section 4 - Maintenance Procedures at 250 Hours or 6 Months

Section Contents

Page
Fuel Filter (Spin-On Type) 4-3
Clean and Inspect for Reuse....4-6
With Pressurized Fuel Filtering....4-6
With Vacuum Fuel Filtering....4-6
Initial Check....4-3
With Pressurized Fuel Filtering....4-3
With Vacuum Fuel Filtering....4-4
Install....4-6
With Pressurized Fuel Filtering....4-6
With Priming Pump....4-7
Without Priming Pump....4-8
Remove....4-5
With Pressurized Fuel Filtering....4-5
With Vacuum Fuel Filtering....4-6
Lubricating Oil and Filters 4-1
Drain....4-1
Fill....4-2
Install....4-2
Remove....4-1
Maintenance Procedures - Overview 4-1
General Information....4-1
Supplemental Coolant Additive (SCA) and Antifreeze Concentration 4-3
Maintenance Check....4-3
Supplemental Coolant Additive (SCA)....4-3
Antifreeze....4-3

This Page Left Intentionally Blank

Maintenance Procedures - Overview

General Information

All maintenance checks and inspections listed in previous maintenance intervals **must** also be performed at this time, in addition to those listed under this maintenance interval.

Lubricating Oil and Filters

Drain

⚠WARNING⚠

To reduce the possibility of personal injury, avoid direct contact of hot oil with your skin.

⚠WARNING⚠

Some state and federal agencies have determined that used engine oil can be carcinogenic and cause reproductive toxicity. Avoid inhalation of vapors, ingestion, and prolonged contact with used engine oil. If not reused, dispose of in accordance with local environmental regulations.

Operate the engine until the water temperature reaches 60°C [140°F]. Shut off the engine. Remove the oil drain plug. Drain the oil immediately to make sure all the oil and suspended contaminants are removed from the engine.

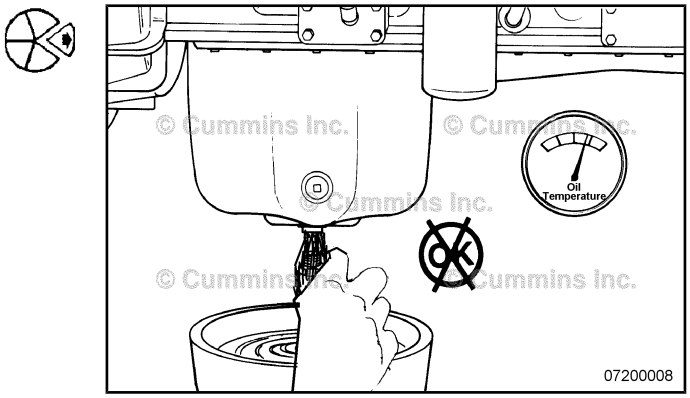

Remove

Remove the lubricating oil filter. Refer to Procedure 007-013.

NOTE: Dispose of used oil in accordance with federal, state, and local laws and regulations.

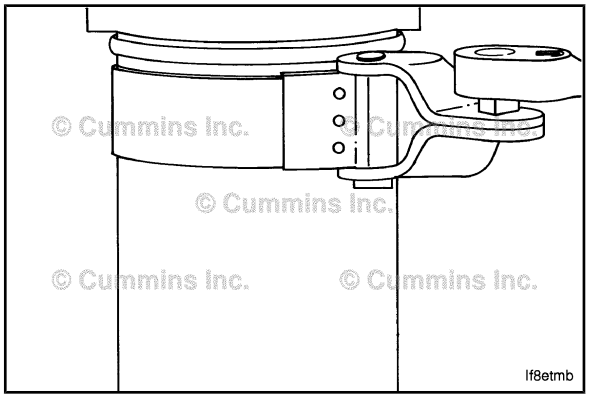

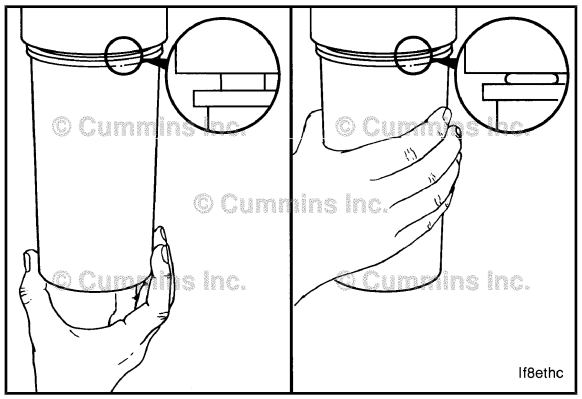

Install

Fill and install the lubricating oil filter. Refer to Procedure 007-013.

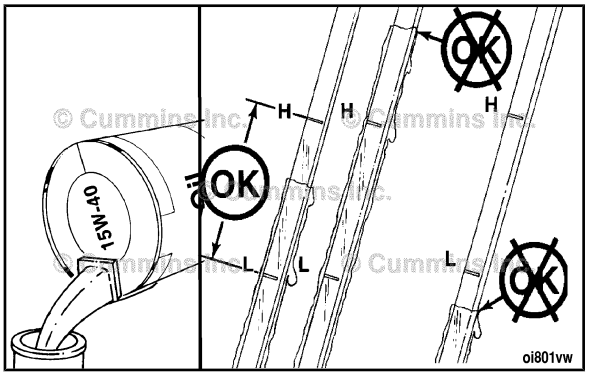

Fill

Add the specified amount of clean 15W-40 oil to fill the oil pan.

Oil Pan Capacity	
Automotive and Industrial	41.6 liters [11 gal]
Power Generation	83.3 liters [22 gal]

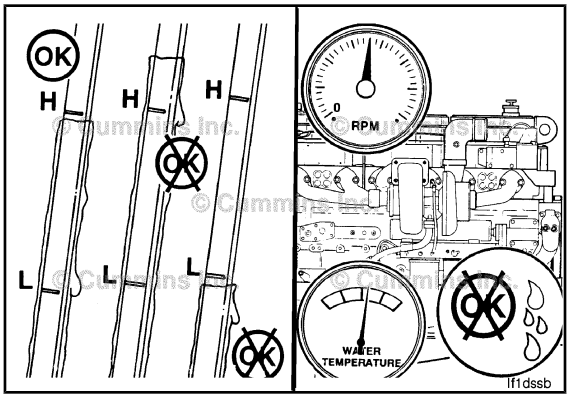

Check the oil level on the dipstick. It **must** be filled to the H (high) mark. Refer to Procedure 007-009 for dipstick calibration.

Operate the engine until the water temperature reaches 82°C [180°F], and check for leaks.

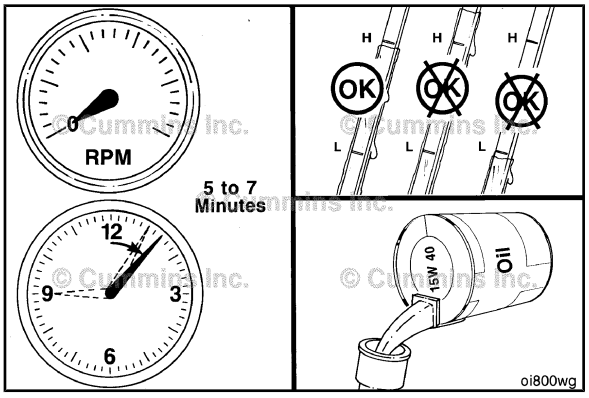

Shut off the engine. Wait 15 minutes for the oil to drain back to the oil pan.

Check the oil level. Add oil as necessary to bring the level up to the H (high) mark on the dipstick.

Supplemental Coolant Additive (SCA) and Antifreeze Concentration

Maintenance Check

Supplemental Coolant Additive (SCA)

Check the SCA concentration level:

- At least twice a year
- At every subsequent oil drain interval if the concentration is above 3 units
- Whenever coolant is added to the cooling system between filter changes.

Use Fleetguard® coolant test kit, Part No. CC2602, to check the SCA concentration level. Instructions are included with the test kit. Refer to Coolant Recommendations and Specifications in Maintenance Specifications (Section V) for the correct SCA and antifreeze level.

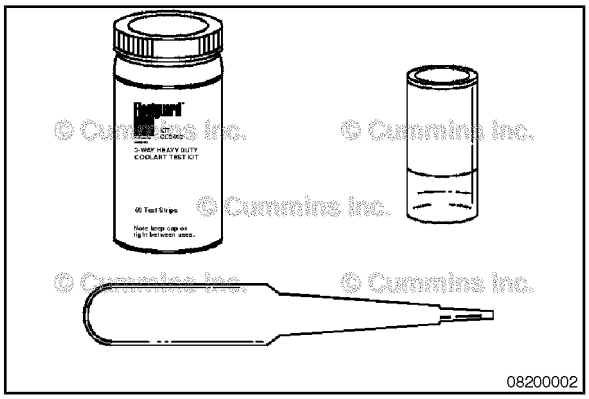

Antifreeze

⚠CAUTION⚠

Overconcentration of antifreeze or use of high-silicate antifreeze can damage the engine.

Check the antifreeze concentration. Use a mixture of 50-percent water and 50-percent ethylene glycol or propylene glycol-based antifreeze to protect the engine to -32°C [-26°F] year-around.

The Fleetguard® refractometer, Part Number C2800, provides a reliable, easy-to-read, and accurate measurement of freezing point protection and glycol (antifreeze) concentration.

Antifreeze is essential in every climate.

Antifreeze broadens the operating temperature range by lowering the coolant freezing point and by raising its boiling point.

The corrosion inhibitors also protect the cooling system components from corrosion and prolong component life.

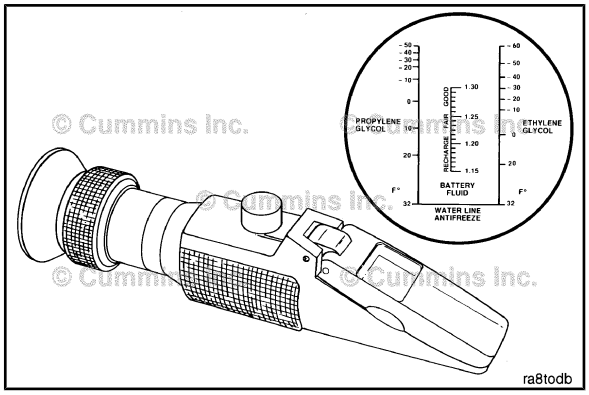

Fuel Filter (Spin-On Type)

Initial Check

With Pressurized Fuel Filtering

Install a pressure gauge, Part Number 3824877 (2758 kPa [400 psi]), on the fuel pump Compuchek® fitting to measure the fuel pressure before the fuel filter.

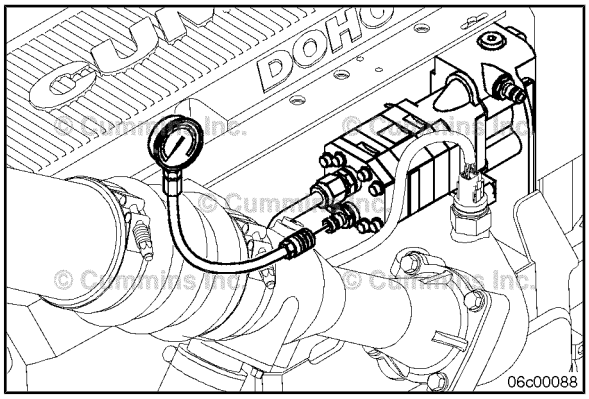

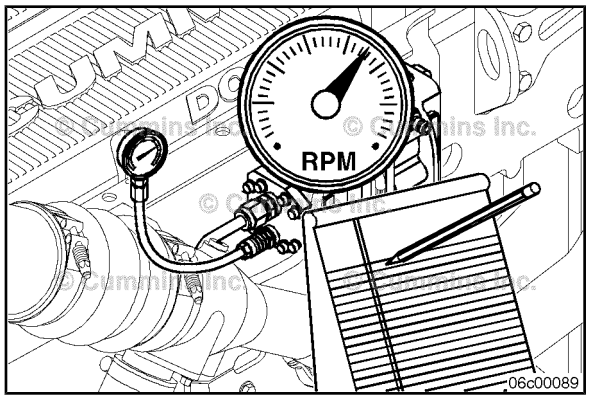

Start the engine and run at high idle and no load.

Measure and record the fuel pressure.

Shut the engine off.

Remove the pressure gauge from the fuel pump.

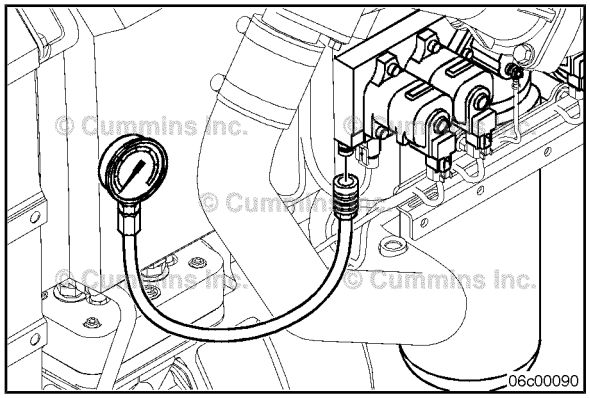

Install a pressure gauge, Part Number 3824877 (275 kPa [400 psi]), on the rail fuel pressure Compuchek® fitting located on the integrated fuel system module to measure fuel pressure after the filter.

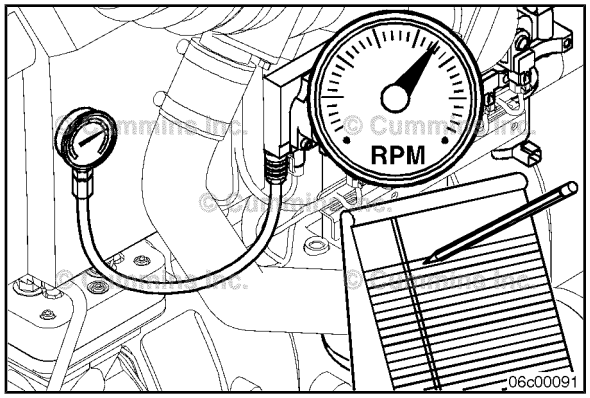

Start the engine and operate at high idle and no load.

Measure and record the fuel pressure.

Shut the engine off.

Remove the pressure gauge from the rail fuel pressure Compuchek® fitting.

The pressure difference between the rail fuel pressure and fuel pump pressure is the differential pressure.

Fuel Filter Restriction		
kPa		**psi**
517	MAX	75

If the fuel filter restriction is above specifications, replace the filter.

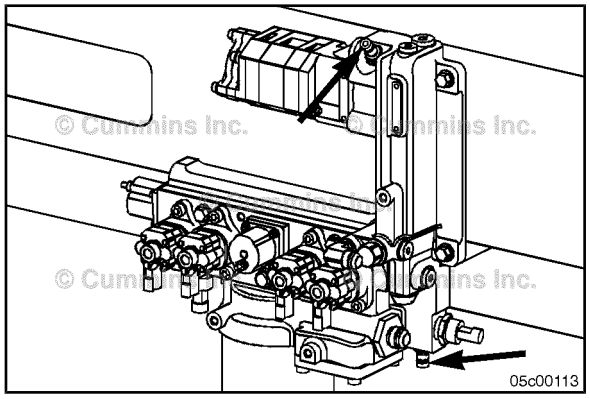

With Vacuum Fuel Filtering

Connect a vacuum gauge to either suction-side Compuchek® fitting.

NOTE: Some engines equipped with priming pumps do **not** have a lower Compuchek® fitting and have an air vent line plumbed into the upper location. Refer to the following procedure for measuring inlet restriction.

Disconnect the air bleed line from the upper location on the IFSM. Insert a Compuchek® fitting in this location and run a line to a catch container.

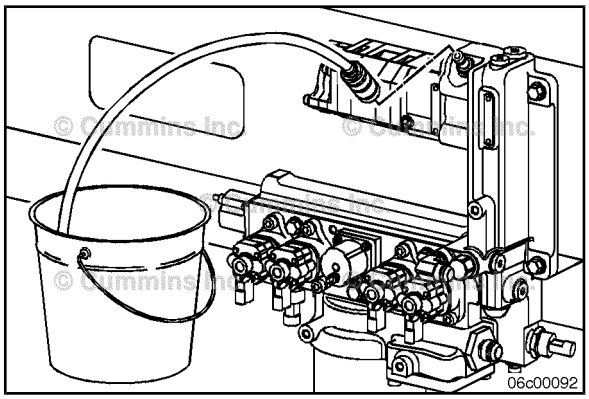

Start the engine.

After the fuel lift pump stops running and with the engine operating at idle, disconnect the hose to the catch container.

Connect the vacuum gauge to the Compuchek® fitting and measure the fuel inlet restriction.

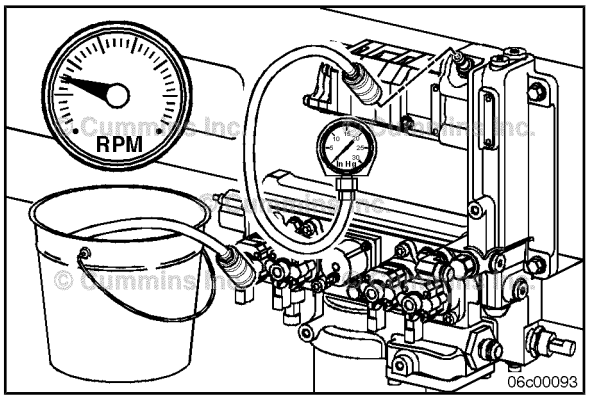

Operate the engine at high idle and no load.

Fuel Inlet Restriction			
	mm Hg		in Hg
Upper Location	356	MAX	14
Lower Location	305	MAX	12

An inlet restriction greater than specification indicates either a dirty fuel filter or a restriction in the OEM fuel supply plumbing. Inlet restriction at the fuel supply connection should be checked to identify the correct source of the restriction.

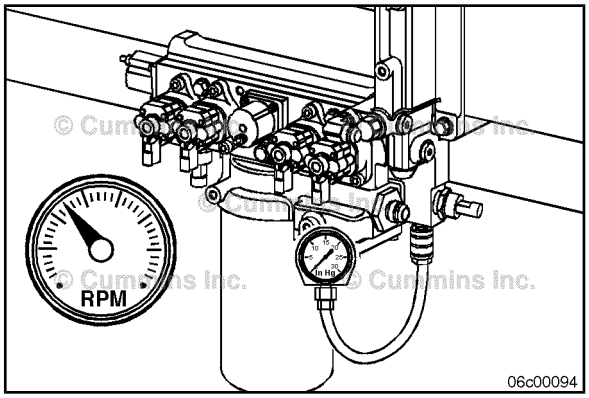

Remove

With Pressurized Fuel Filtering

⚠WARNING⚠

Fuel is flammable. Keep all cigarettes, flames, pilot lights, arcing equipment, and switches out of the work area and areas sharing ventilation to reduce the possibility of severe personal injury or death when working on the fuel system.

Clean the area around the fuel filter head and filter.

Remove the fuel filter with filter wrench, Part Number 3375049.

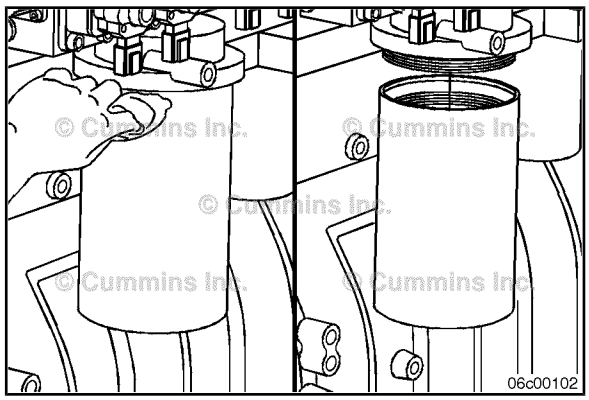

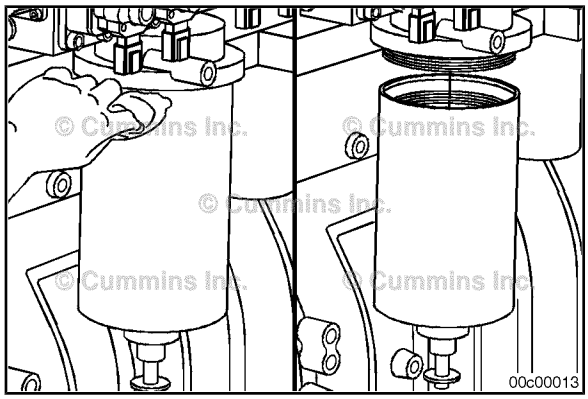

With Vacuum Fuel Filtering

⚠WARNING⚠

Fuel is flammable. Keep all cigarettes, flames, pilot lights, arcing equipment, and switches out of the work area and areas sharing ventilation to reduce the possibility of severe personal injury or death when working on the fuel system.

Clean the area around the fuel filter head and filter.

Disconnect the wiring harness from the water-in-fuel sensor if equipped.

Remove the fuel filter with filter wrench, Part Number 3376807.

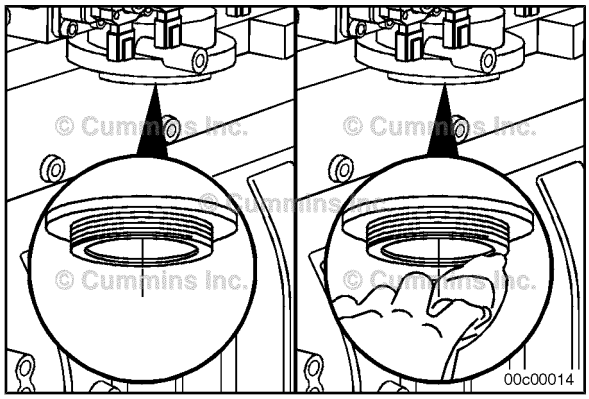

Clean and Inspect for Reuse

With Pressurized Fuel Filtering

Use a clean, lint-free cloth to clean the filter head gasket surface.

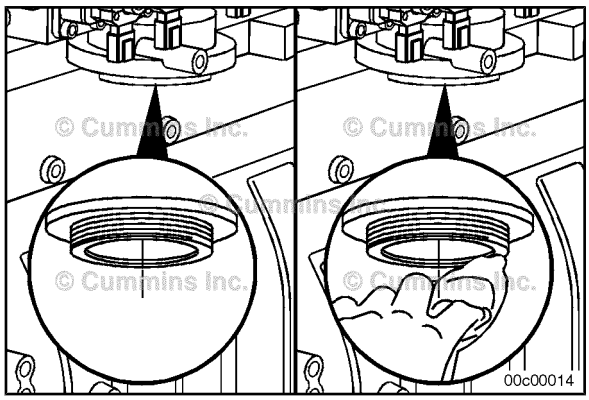

With Vacuum Fuel Filtering

Use a clean, lint-free cloth to clean the filter head gasket surface.

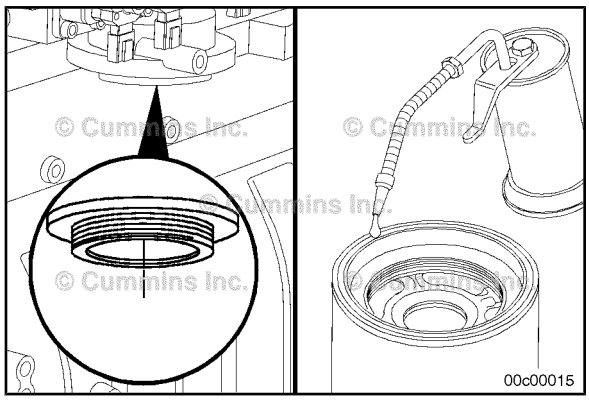

Install

With Pressurized Fuel Filtering

Use the correct filter(s) for your engine. It **must** remove a minimum of 95 percent of free and emulsified water. It **must** also have a minimum of 98.7 percent 15-micron particle-removal efficiency.

Cummins, Part Number 3101546
Fleetguard® Nelson®, Part Number FF2200

Apply a thin coating of clean engine oil to the filter gasket surface.

⚠CAUTION⚠

Mechanical overtightening of the filter can distort the threads or damage the filter element seal.

NOTE: Engines equipped with priming pumps do **not** require the fuel filter to be filled prior to installation if the following filling procedure is followed.

Install the filter onto the filter head. Turn the filter until the gasket contacts the filter head surface.

Tighten the filter an additional 3/4 of a turn after the gasket contacts the filter head surface, or as specified by the filter manufacturer.

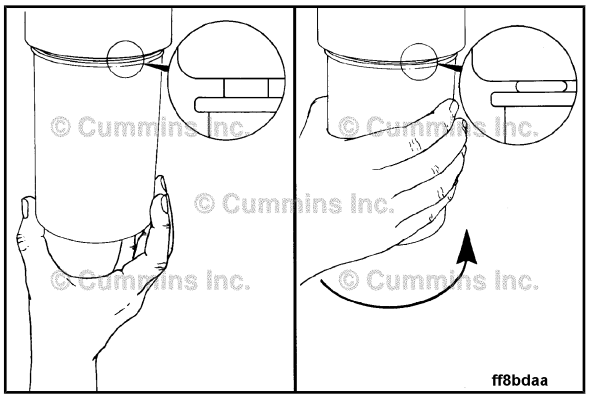

Fill the fuel filter by turning the ignition switch to the ON position. The priming pump will run for two minutes which will adequately fill the fuel filter. The engine can then be started.

NOTE: The engine will, perhaps, run rough for several minutes until the air is out of the system.

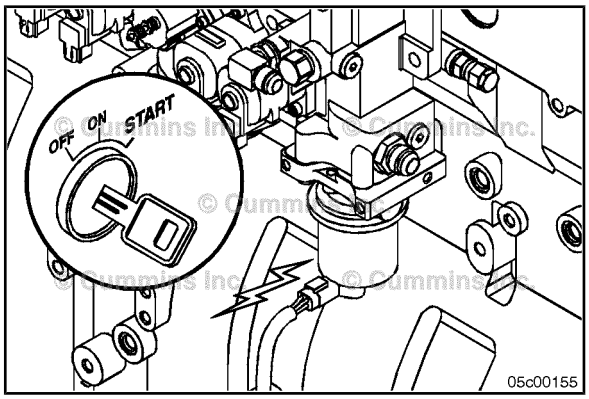

With Priming Pump

Use the correct filter(s) for your engine. It **must** remove a minimum of 95 percent of free and emulsified water. It **must** also have a minimum of 98.7 percent at 25-micron particle-removal efficiency.

Cummins, Part Number 4010651
Fleetguard® Nelson®, Part Number FS1040

Apply a thin coating of clean engine oil to the filter gasket surface and the center seal.

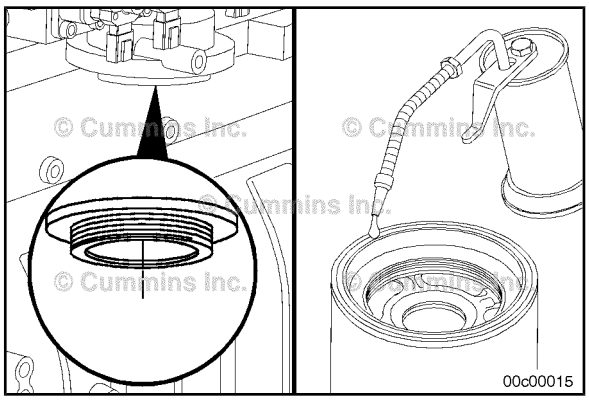

⚠CAUTION⚠

Mechanical overtightening of the filter can distort the threads or damage the filter element seal.

NOTE: Engines equipped with priming pumps do **not** require the fuel filter to be filled prior to installation if the following filling procedure is followed.

Install the filter onto the filter head. Turn the filter until the gasket contacts the filter head surface.

Tighten the filter an additional 3/4 of a turn after the gasket contacts the filter head surface, or as specified by the filter manufacturer.

NOTE: If the filter is equipped with a water-in-fuel sensor, rotate the sensor to the desired location and connect the wiring harness.

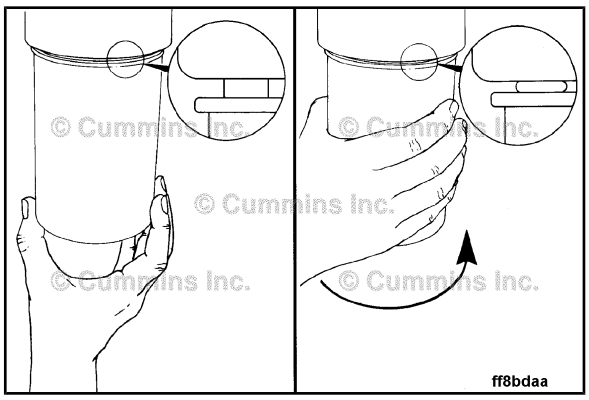

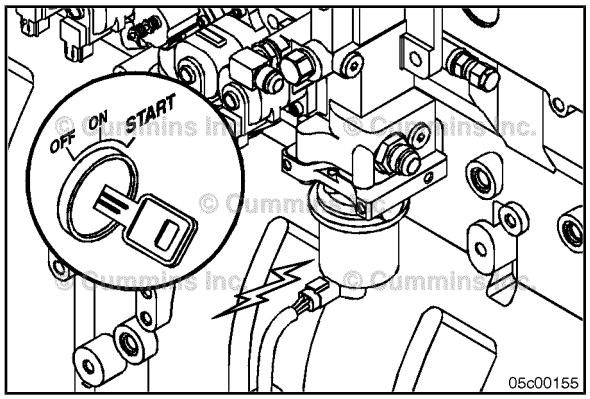

Fill the fuel filter by turning the ignition switch to the ON position. The priming pump will run for two minutes which will adequately fill the filter. The engine can then be started.

Some engines utilize a manual, remote mount priming pump. Flip the priming pump mounted toggle switch to the ON position. Run the pump for two minutes and shut it off. The engine can then be started.

NOTE: The engine will, perhaps, run rough for several minutes until the air is out of the system.

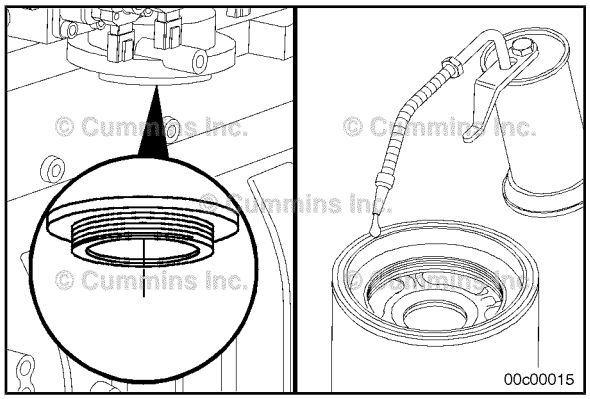

Without Priming Pump

Use the correct filter(s) for your engine. It **must** remove a minimum of 95 percent of free and emulsified water. It **must** also have a minimum of 98.7 percent at 25-micron particle-removal efficiency.

Cummins, Part Number 4010651
Fleetguard® Nelson®, Part Number FS1040

Apply a thin coating of clean engine oil to the filter gasket surface and the center seal.

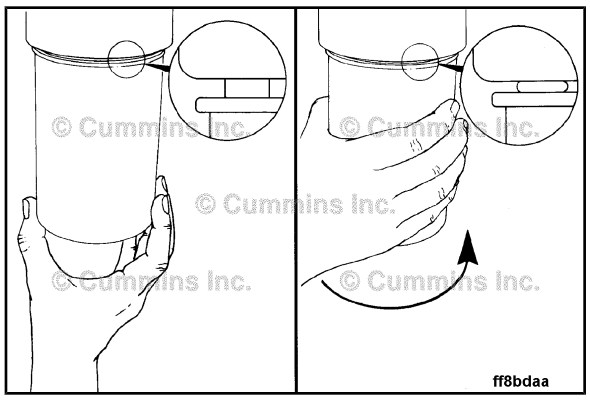

⚠CAUTION⚠
Mechanical overtightening of the filter can distort the threads or damage the filter element seal.

NOTE: Fill the filter with clean fuel prior to installation.

Install the filter onto the filter head. Turn the filter until the gasket contacts the filter head surface.

Tighten the filter an additional 3/4 of a turn after the gasket contacts the filter head surface, or as specified by the filter manufacturer.

NOTE: If the filter is equipped with a water-in-fuel sensor, rotate the sensor on the filter to the desired location and connect the wiring harness.

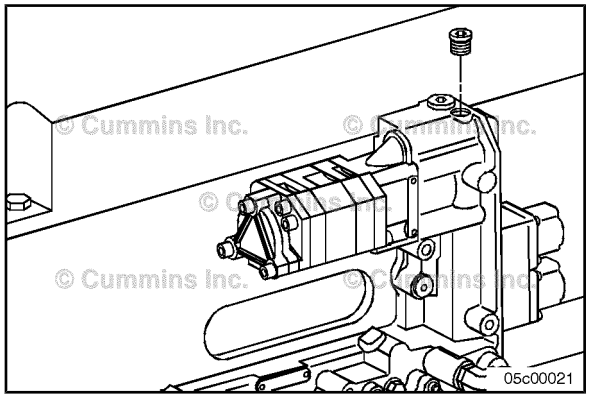

Remove the external hex plug on the top of the integrated fuel system module. Crank the engine until a solid stream of fuel comes out of the port.

Install the hex plug.

Crank the engine for 20 seconds. If the engine does **not** start within 20 seconds, wait two minutes. It will probably be necessary to remove the filter, fill the filter with clean fuel, and install the filter.

Repeat these steps until the engine starts.

NOTE: The engine will, perhaps, run rough for several minutes until the air is out of the system.

Section 5 - Maintenance Procedures at 1500 Hours or 1 Year

Section Contents

Page
Air Cleaner Restriction 5-8
Maintenance Check....5-8
Air Leaks, Air Intake and Exhaust Systems 5-4
Maintenance Check....5-4
Variable Geometry....5-6
Coolant Filter 5-1
General Information....5-1
Install....5-2
Remove....5-1
Cooling Fan Belt Tensioner 5-3
Inspect for Reuse....5-3
Engine Wiring Harness 5-9
Maintenance Check....5-9
Maintenance Procedures - Overview 5-1
General Information....5-1

This Page Left Intentionally Blank

Maintenance Procedures - Overview

General Information

All maintenance checks and inspections listed in previous maintenance intervals **must** also be performed at this time, in addition to those listed under this maintenance interval.

Coolant Filter

General Information

Refer to Procedure Coolant Recommendations and Specifications at the beginning of this section.



An on/off valve is provided to prevent coolant leakage while changing the coolant filter.

With the valve in the ON position (1), the coolant flows to and from the coolant filter. In the OFF position (2), the coolant flow is cut off to and from the coolant filter.

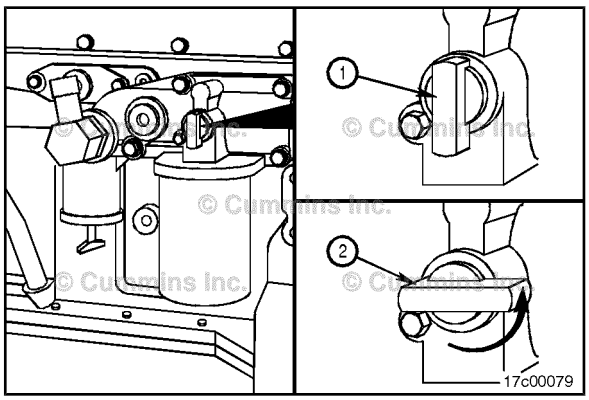

Remove

⚠WARNING⚠

Do not remove the pressure cap from a hot engine. Wait until the coolant temperature is below 50°C [120°F] before removing the pressure cap. Heated coolant spray or steam can cause personal injury.

Remove the cooling system pressure cap.

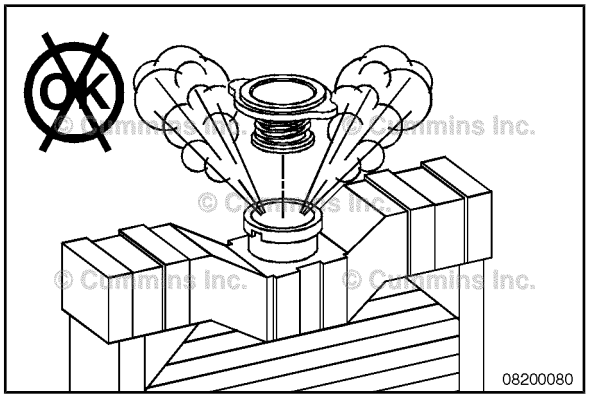

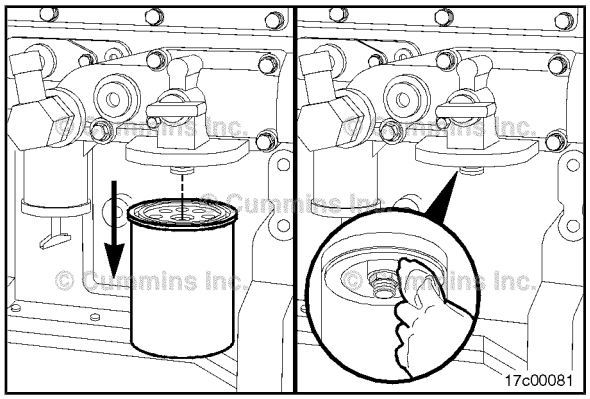

⚠WARNING⚠

Coolant is toxic. Keep away from children and pets. If not reused, dispose of in accordance with local environmental regulations.

Turn the coolant on/off valve to the OFF position.

NOTE: Do **not** use force to open or close the on/off valve. If the valve does **not** turn freely, refer to procedure 008-082.

Remove and discard the coolant filter. Clean the gasket surface on the filter head.

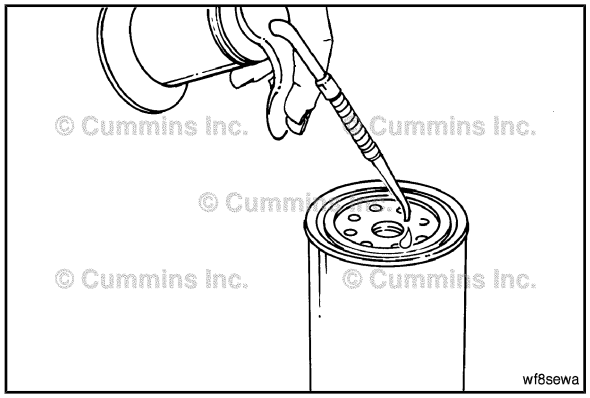

Install

△CAUTION△

Mechanical overtightening can distort the threads or damage the filter head.

Apply a thin film of clean engine oil, or its equivalent, to the coolant filter gasket sealing surface before installing the coolant filter.

Tighten the coolant filter 1/2 to 3/4 of a turn after initial gasket contact, or as specified by the manufacturer.

Turn the coolant on/off valve to the ON position.

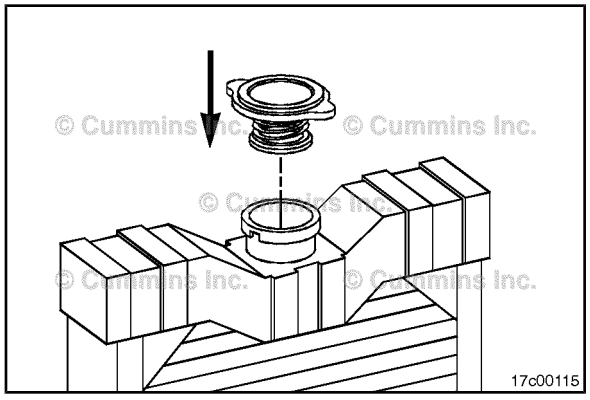

Install the radiator pressure cap.

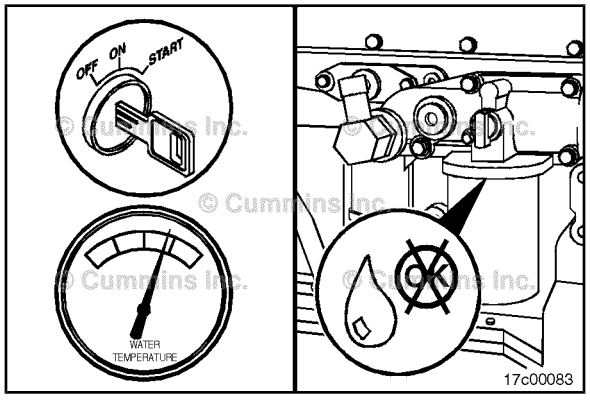

⚠WARNING⚠

Do not remove the pressure cap from a hot engine. Wait until the coolant temperature is below 50°C [120°F] before removing the pressure cap. Heated coolant spray or steam can cause personal injury.

Operate the engine until the coolant temperature is above 82°C [180°F], and check for coolant leaks.

After the air has been purged from the system, check the coolant level again.

Cooling Fan Belt Tensioner

Inspect for Reuse

With the engine turned off, verify that neither the top nor bottom tensioner arm stop is touching the cast boss on the tensioner body. If either of the stops is touching a boss, the alternator belt **must** be replaced. Check to make sure the correct belt part number is being used if either condition exists.

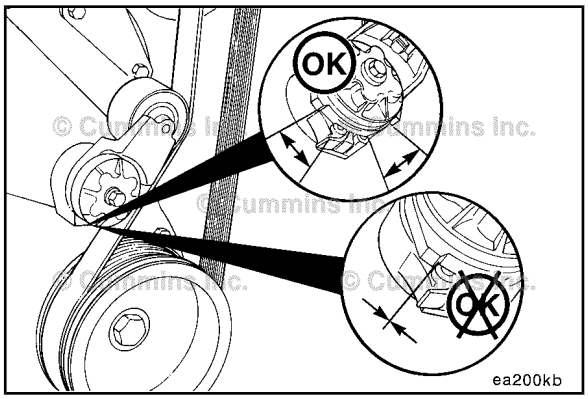

Check the tensioner pulley and body for cracks. If any cracks are noticed, the tensioner **must** be replaced.

Check the tensioner for dirt buildup. If this condition exists, the tensioner **must** be removed and steam-cleaned.

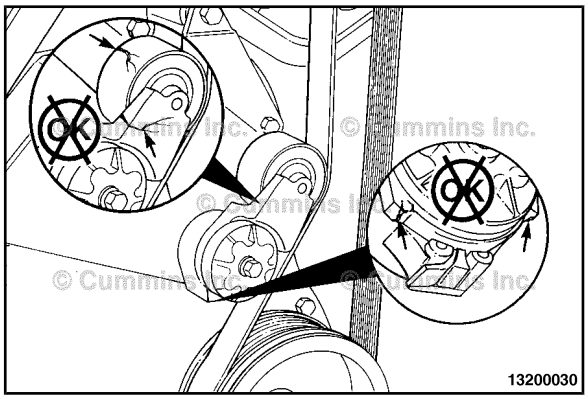

Remove the alternator belt.

If the tensioner pulley touches the accessory drive pulley after the tensioner has been fully relaxed, the bottom tensioner arm stop boss has broken and the tensioner **must** be replaced.

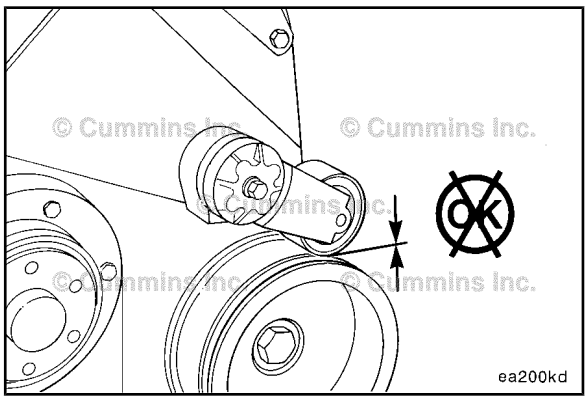

Check that the bottom tensioner arm stop is in contact with the bottom tensioner arm stop boss on the tensioner body. If these two are **not** contacting, the tensioner **must** be replaced.

Install the alternator belt.

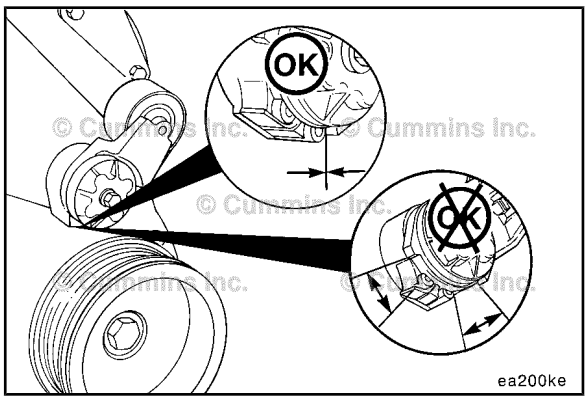

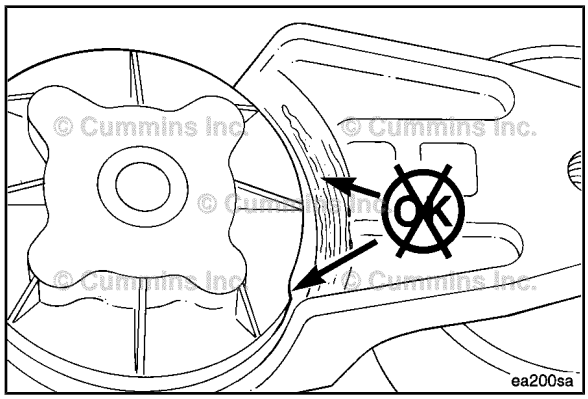

Inspect the tensioner for evidence of the pivoting tensioner arm contacting the stationary circular base. If there is evidence of these two areas contacting, the pivot tube bushing has failed and the tensioner **must** be replaced.

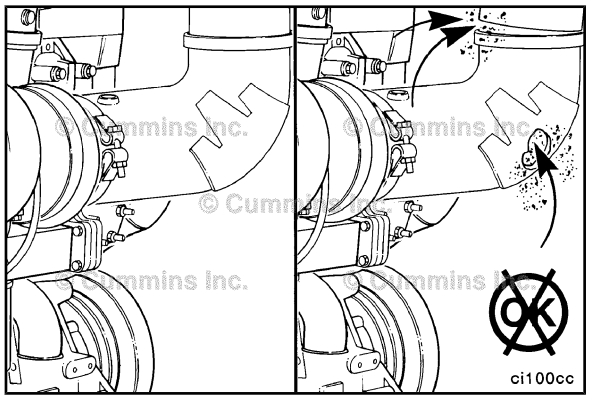

Air Leaks, Air Intake and Exhaust Systems

Maintenance Check

⚠CAUTION⚠

Engine intake air must be filtered to prevent dirt and debris from entering the engine. If the intake air piping is damaged or loose, unfiltered air will enter the engine and cause premature wear.

Inspect for loose clamps or damage between the intake air piping, air cleaner, turbocharger, charge-air cooler, and intake manifold.

Replace any damaged pipes, and tighten loose clamps.

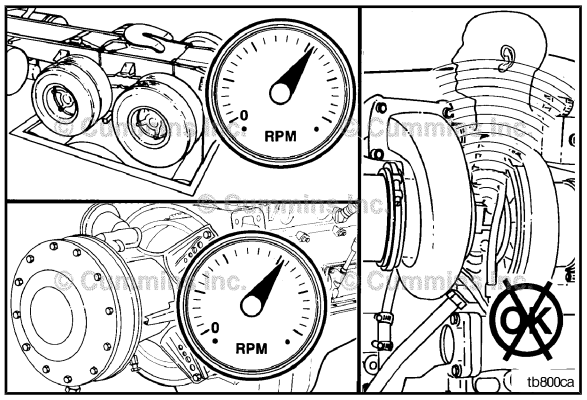

Check for corrosion of the intake system piping under the clamps and hoses. Corrosion can allow corrosive products and dirt to enter the intake system. Disassemble and clean as required.

Excessive back pressure can cause exhaust leaks. Verify the exhaust back pressure is within specified limits. Refer to Procedure 011-009.

Operate the engine at full throttle and maximum load, and check for air leaks. Listen for a whistling noise caused by high-pressure air leaks.

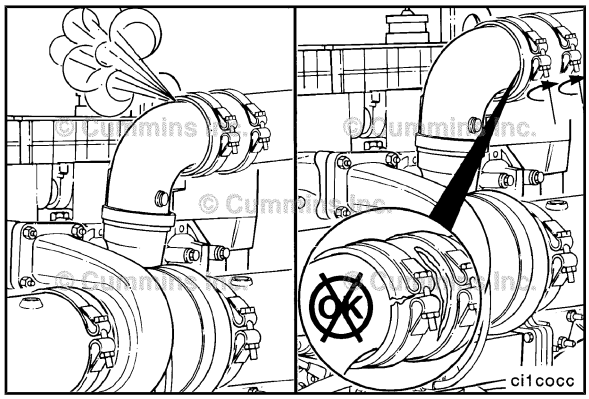

⚠CAUTION⚠

Do not use air tools to remove or install the nut on the v-band clamp. Use of these tools can seriously damage the threads or the bolt and cause the clamp to not be able to be used.

The noise can be caused by an air leak from the following:

Turbocharger-to-charge-air cooler elbow connection.

- Inspect the connection and o-ring seal for damage.
- Tighten the v-band clamps.

Torque Value: 9 N•m [80 in-lb]

Any charge-air cooler piping or connecting hose.

- Inspect the hose and piping for damage.
- Tighten the hose clamps.

Torque Value: 9 N•m [80 in-lb]

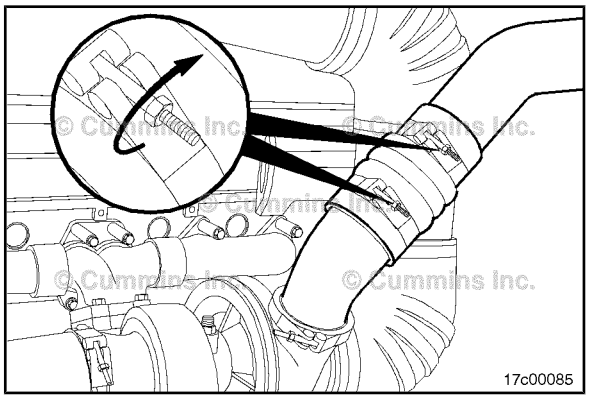

Check soot streaks from the exhaust manifold slip joints.

Remove the exhaust manifold and inspect the slip joints for damage.

Check exhaust manifold-to-cylinder head sealing gasket.

If soot streaks are found replace the exhaust manifold to cylinder head gaskets. Refer to Procedure 011-007.

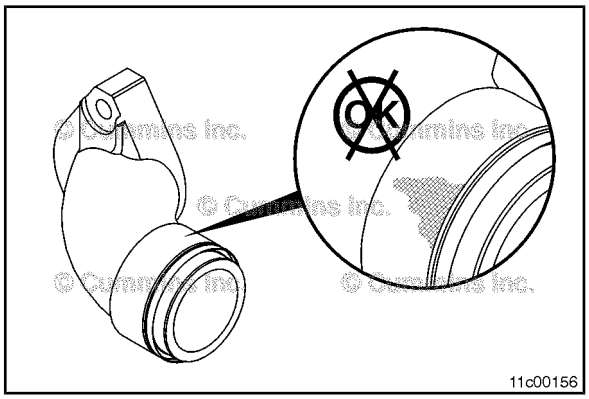

Turbocharger-to-exhaust-manifold mounting gasket.

- Replace the gasket.

Refer to Procedure 010-033.

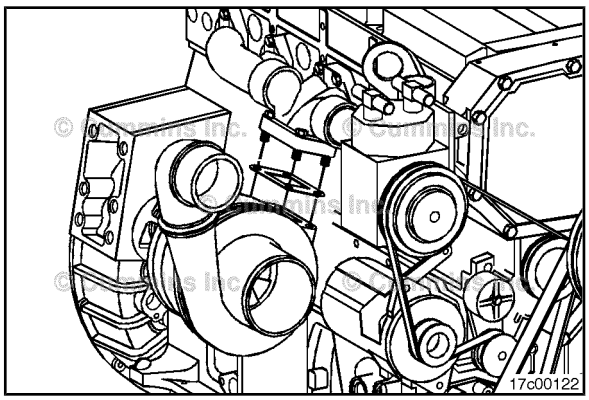

⚠CAUTION⚠

Do not use air tools to remove or install the nut on the v-band clamp. Use of these tools can seriously damage the threads or the bolt and cause the clamp to not be able to be used.

Turbine housing sealing surface air leak.

- Tighten the v-band clamp.

Torque Value: 14 N•m [124 in-lb]

- Check for an air leak.
- If an air leak is still present, remove and replace the turbocharger.

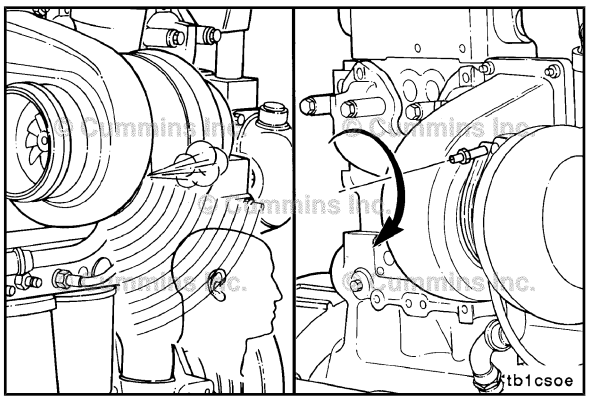

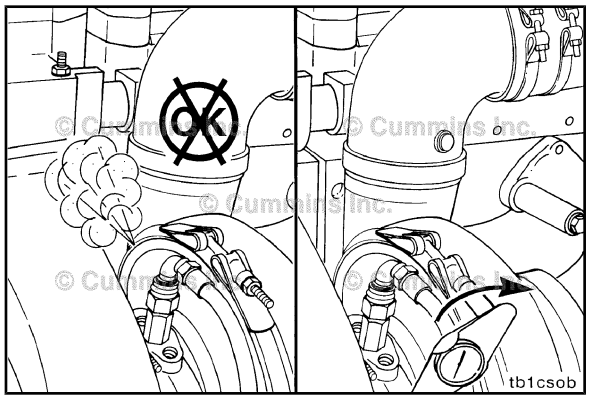



Compressor housing sealing surface air leak.

- Tighten the v-band.

Torque Value: 9 N•m [80 in-lb]



- Check for an air leak.
- If an air leak is still present, remove and replace the turbocharger. Refer to Procedure 010-033.





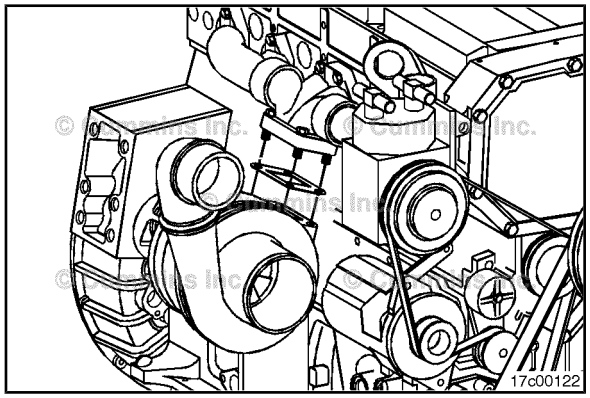

Variable Geometry

⚠WARNING⚠

Removing the turbine housing v-band tamper proofing on any variable geometry turbocharger will void the Cummins Inc. warranty coverage.

Turbine housing sealing surface air leak: For variable geometry turbochargers, the turbine v-band nut has a tamper proof clamp. Therefore the torque specifications for the turbine v-band will **not** be able to be checked.

The purpose of the tamper proofing is to prevent disturbing this joint. Any loosening of the v-band or adjusting of the orientation of the turbine housing will affect the sliding nozzle clearances and will damage the turbocharger and result in poor performance.

Indications of leakage are soot streaks from the joint and/or an audible whistle from the engine. The turbochargers **must** be replaced if there are any indications of leakage from the turbine housing v-band joint.

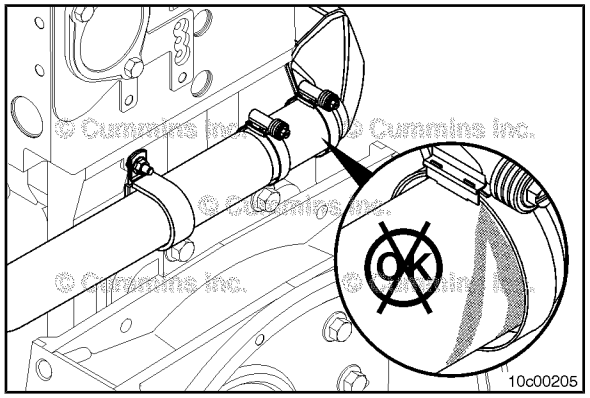



EGR plumbing sealing joints leak:

Check for soot streaks from the EGR crossover tube and hoses.



Tighten the hose clamps. Refer to Procedure 011-025.

Check for an exhaust leak. If an exhaust leak is still present, remove and replace the EGR crossover tube or hose.

Check for soot streaks from the EGR valve gasket and seal rings.

Inspect for signs of leakage such as soot streaks. If signs of leakage are present, replace the EGR valve gaskets. Refer to Procedure 011-022.

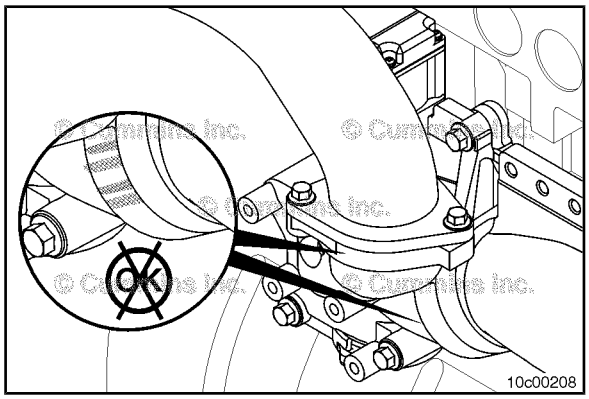

Check for leakage from the EGR valve weep hole.

Soot leakage at the EGR valve weep hole is normal and can be expected. Do **not** replace the EGR valve if soot streaks are found at the EGR valve weep hole.

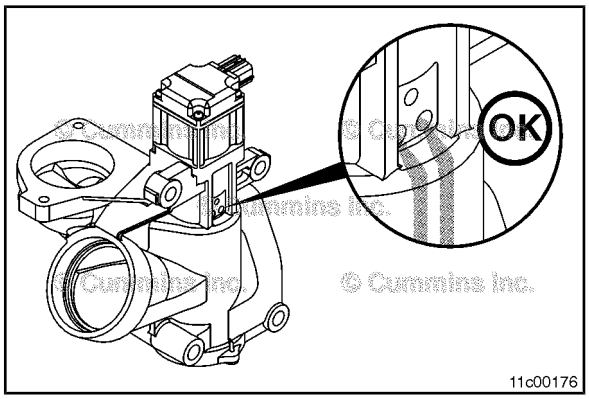

Check for leakage from the EGR cooler bellows.

Inspect for signs of leakage such as soot streaks. If signs of leakage are present, replace the EGR cooler or gasket. Refer to Procedure 011-019.

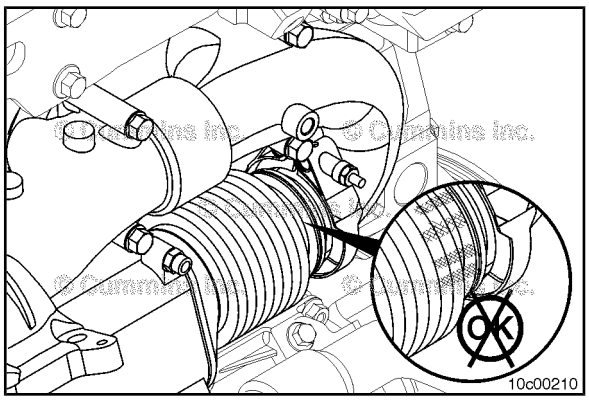

Check for soot leakage at the EGR differential pressure sensing tubes.

Inspect for signs of leakage such as soot streaks, appearing yellowish brown or black.

If signs of leakage are present, replace the EGR differential pressure tubes. Refer to Procedure 011-026.

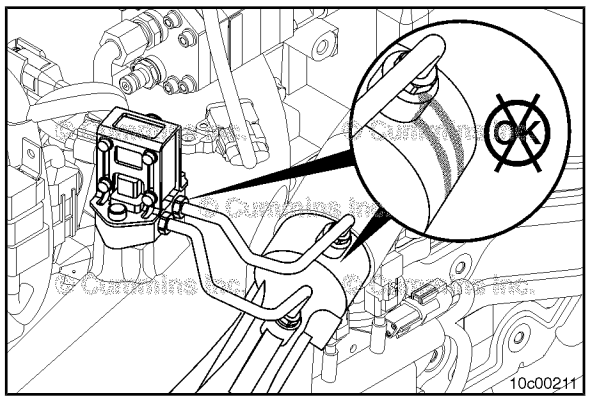

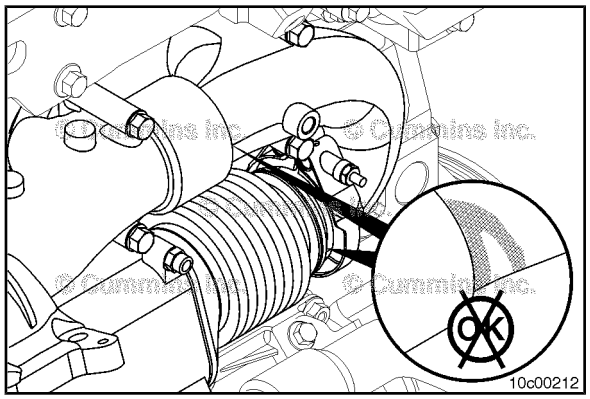

Check for soot leakage on the exhaust adapter pipe.

Inspect for signs for leakage such as soot streaks , appearing yellowish brown or black.

If signs of leakage are present, replace the gasket and v-band clamp. Refer to procedure 011-043.

Clean all soot stains and paint the components in order to detect future leaks.

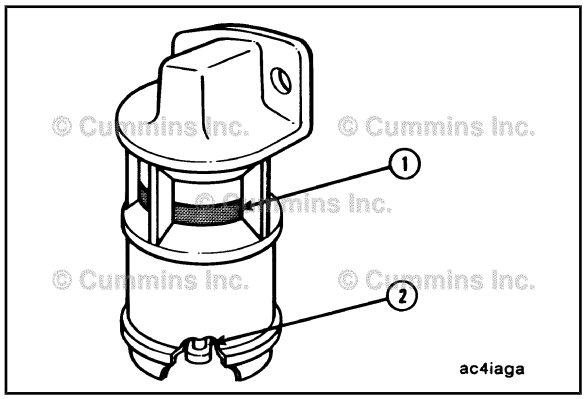

Air Cleaner Restriction

Maintenance Check

Mechanical Indicator

NOTE: Do **not** remove the felt washer from the indicator. The felt washer absorbs moisture.

A mechanical restriction indicator is available to indicate excessive air restriction through a dry-type air cleaner. This instrument can be mounted in the air cleaner outlet or on the instrument panel. The red flag (1) in the window gradually rises as the cartridge loads with dirt. After changing or replacing the cartridge, reset the indicator by pushing the reset button (2).

Restriction or vacuum indicators need to be installed as close as possible to the turbocharger air inlet in order to obtain a true indication of restrictions.

⚠CAUTION⚠

Never operate the engine without an air cleaner. Intake air must be filtered to prevent dirt and debris from entering the engine and causing premature wear.

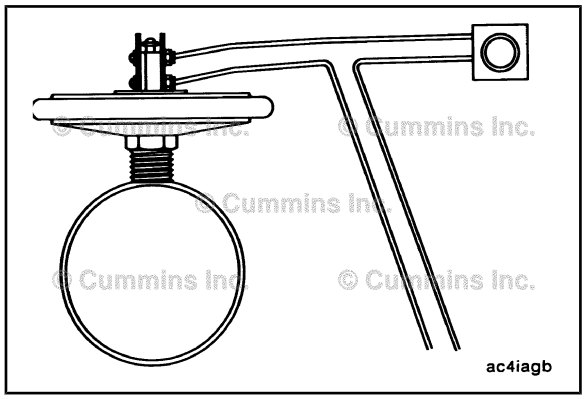

Vacuum Indicator

Vacuum switches actuate a warning light on the instrument panel when the air restriction becomes excessive.

Engine Wiring Harness

Maintenance Check

⚠WARNING⚠

To reduce the possibility of personal injury, do not touch any ignition wires or components while the engine is operating, unless using suitably insulated tools.

Check all wire connections and the wiring harness for damage. Faulty wiring can cause improper engine operation and poor performance.

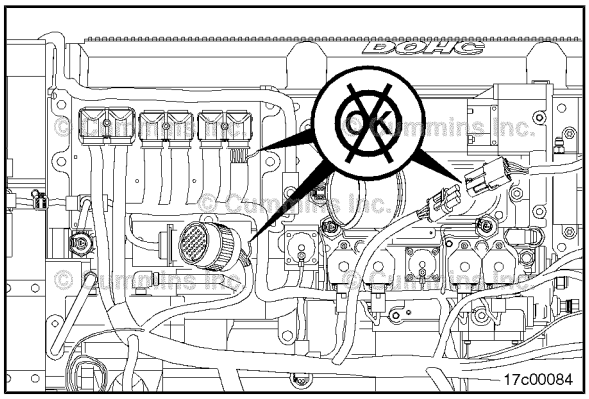

Notes

Section 6 - Maintenance Procedures at 6000 Hours or 2 Years

Section Contents

Page
Cold Weather Starting Aids 6-2
Maintenance Check....6-2
Crankcase Breather Tube 6-1
Maintenance Check....6-1
Engine Mounts 6-2
Inspect....6-2
Engine Steam Cleaning 6-2
Clean....6-2
Maintenance Procedures - Overview 6-1
General Information....6-1
Overhead Set 6-3
Adjust....6-8
General Information....6-7
Measure....6-3
General Information....6-3
Radiator Hoses 6-1
Maintenance Check....6-1
Vibration Damper, Viscous 6-3
Inspect....6-3

This Page Left Intentionally Blank

Maintenance Procedures - Overview

General Information

All maintenance checks and inspections listed in previous maintenance intervals **must** also be performed at this time, in addition to those listed under this maintenance interval.

Crankcase Breather Tube

Maintenance Check

Inspect the breather tube for sludge, debris, or ice in the tube.

Inspect the tube more frequently in icy conditions.

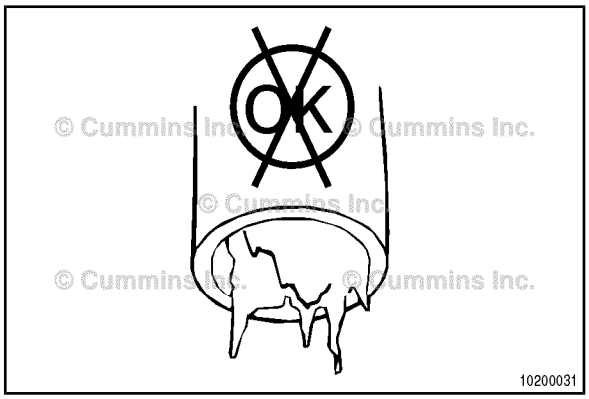

Radiator Hoses

Maintenance Check

Check all hoses for cracks, cuts, or collapsing.

NOTE: The silicone engine coolant hose will exhibit swelling due to the elasticity of the hose.

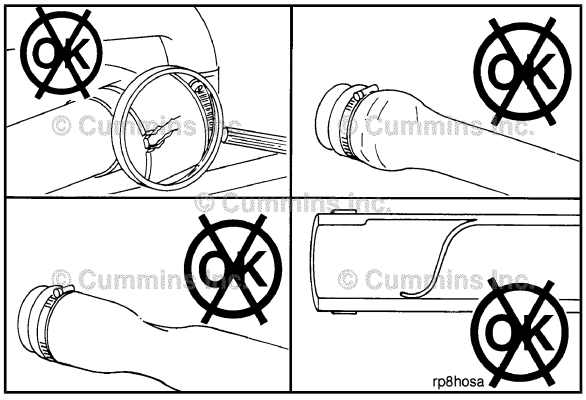

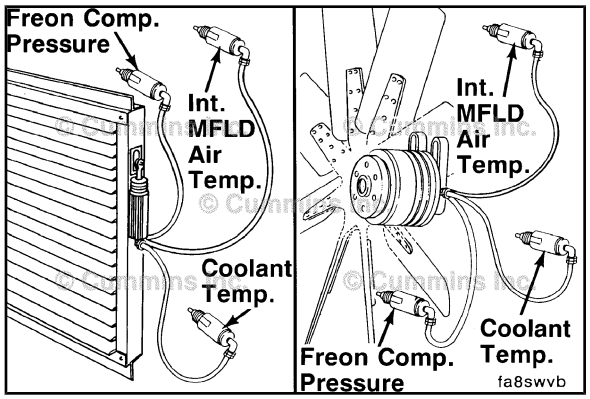

Cold Weather Starting Aids

Maintenance Check

Check the shutterstats and the thermatic fan.

NOTE: Parallel control systems are required for automatic radiator **shutters** and **thermatic fans**. Shutters **must** open and fans turn on whenever the intake manifold air temperature, the engine coolant outlet temperature, or the freon compressor pressure rises above their sensor set points. Any one of the following conditions **must** activate the shutters and/or fan:

- High coolant temperature
- High intake manifold temperature
- High freon compressor pressure.

Shutterstat and thermatic fan controls **must** operate in the same temperature range as the thermostat with which they are used. Refer to the Thermal Control Settings Graph in this section.

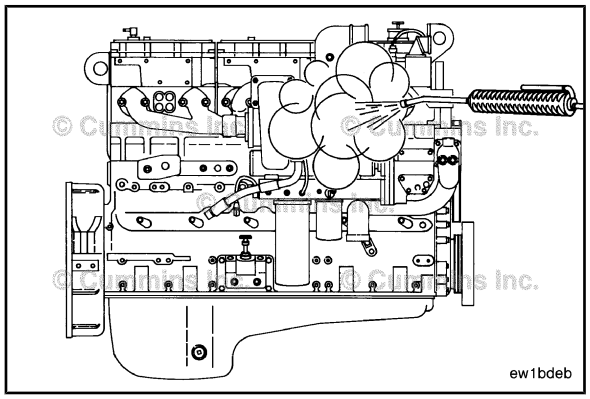

Engine Steam Cleaning

Clean

⚠WARNING⚠

When using a steam cleaner, wear safety glasses or a face shield, as well as protective clothing. Hot steam can cause serious personal injury.

Steam is the best method of cleaning a dirty engine or a piece of equipment. If steam is **not** available, use a solvent to wash the engine.

Protect all electrical components, openings, and wiring from the full force of the cleaner spray nozzle.

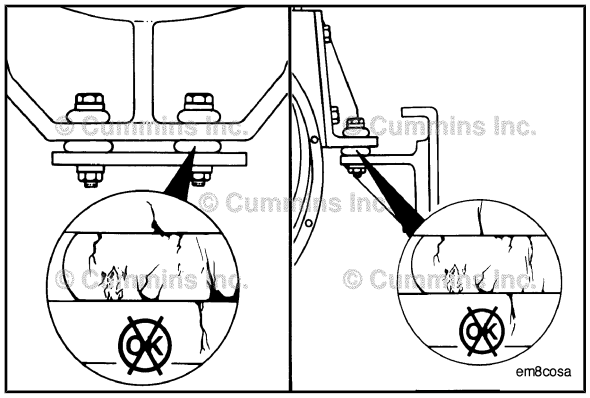

Engine Mounts

Inspect

Check the torque on the engine-mounting nuts and bolts. Tighten any that are loose. Refer to the OEM service manual or manufacturer for torque specifications.

Inspect the rubber for deterioration and age hardening. Replace any broken or lost bolts, capscrews, or damaged rubber.

Vibration Damper, Viscous

Inspect

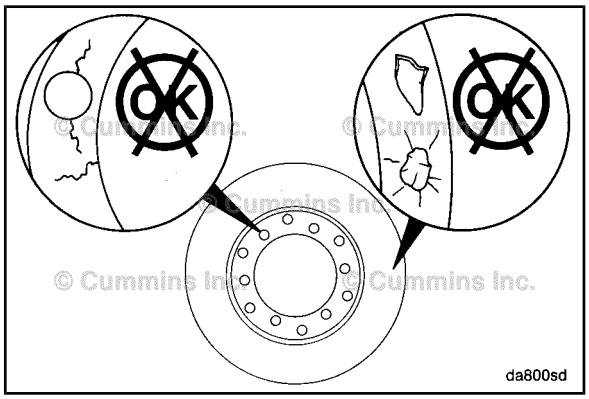

⚠CAUTION⚠

The silicone fluid in the vibration damper will become solid after extended service and will make the damper inoperative. An inoperative vibration damper can cause major engine or drivetrain failures.

Check the vibration damper for evidence of fluid loss, dents, and wobble. Inspect the vibration damper thickness for any deformation or raising of the damper cover plate.

If any of these conditions are identified, contact your local Cummins Authorized Repair Location to replace the vibration damper.

Viscous dampers have a limited life. The maximum damper life specifications are located in Maintenance Specifications (Section V).

For vibration damper location, refer to Engine Diagrams in Engine Identification (Section E).

Overhead Set

Measure

General Information

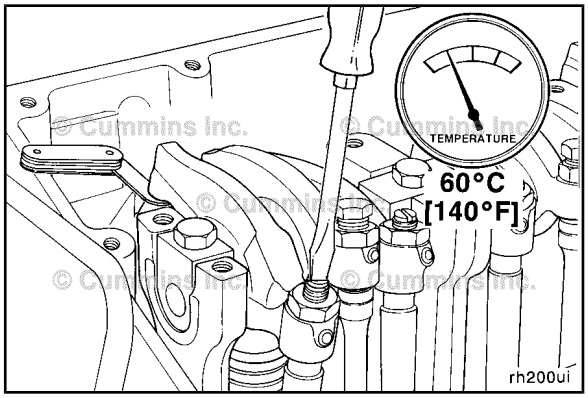

All overhead lash measurements **must** be made when the engine is cold. Stabilized coolant temperature **must** be at 60°C [140°F] or below.

Remove the rocker lever cover. Refer to Procedure 003-011.

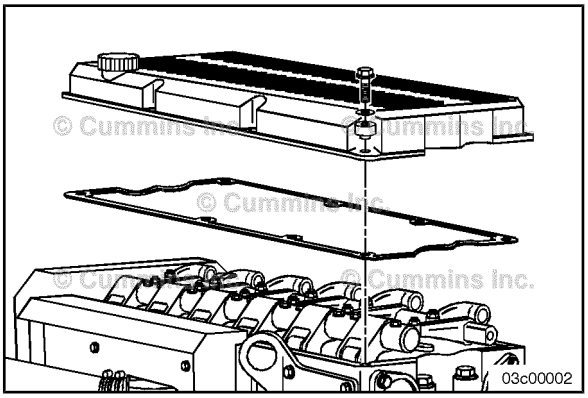

Make sure the engine base timing is properly set before attempting to measure, adjust, or set the overhead. Refer to Procedure 001-088.

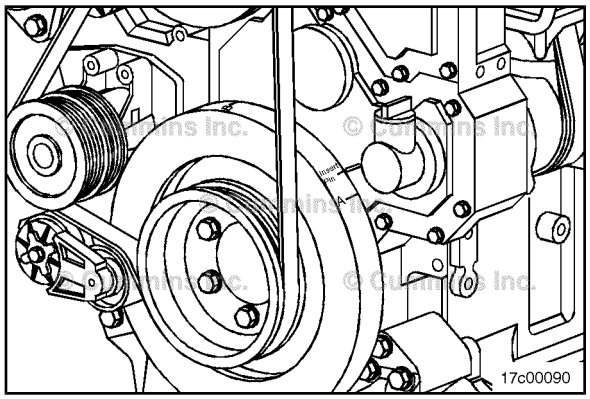

Early engine vibration dampers are marked with BRAKE SET 1-6, BRAKE SET 2-5, or BRAKE SET 3-4. The engine brakes **must** be set at the appropriate mark on these engines. Newer engine vibration dampers are marked with **only** A, B, or C, and are adjusted with the valves and injector on the same cylinder.

Locate the valve set marks on the outside of the vibration damper.

The set marks are A, B, and C:

Set to mark A to adjust cylinder 1 or 6.
Set to mark B to adjust cylinder 2 or 5.
Set to mark C to adjust cylinder 3 or 4.

Two complete revolutions are required to set all valves, engine brakes, and injectors.

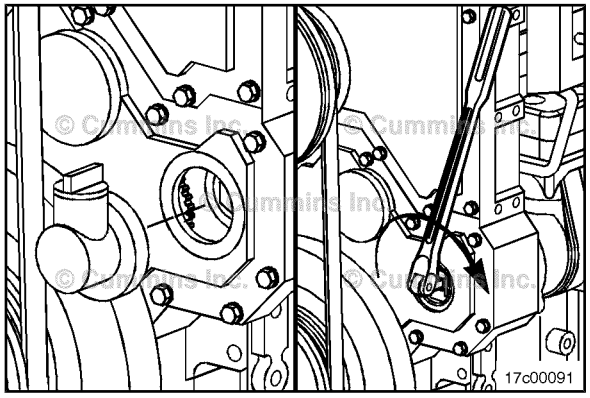

If the engine is equipped with an air compressor:

Remove the oil fill connector from the lower gear case cover.

Insert a 3/4-inch drive ratchet and extension into the air compressor drive.

Rotate the air compressor drive **clockwise** as viewed from the front of the engine.

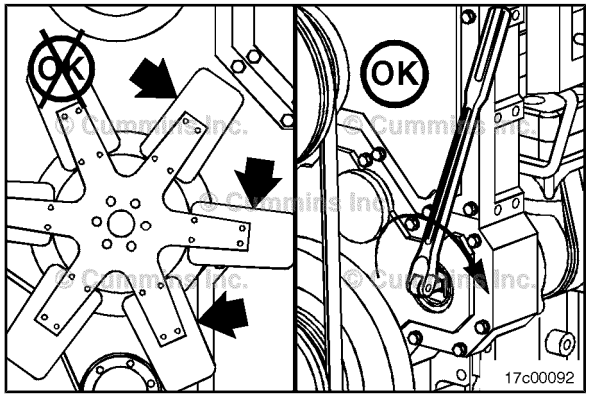

⚠WARNING⚠

Do not pull or pry on the fan to manually rotate the engine. To do so can damage the fan blades. Damaged fan blades can cause premature fan failures which can result in serious personal injury or property damage.

The crankshaft rotation is **clockwise** as viewed from the front of the engine.

The cylinders are numbered from the front of the engine (1-2-3-4-5-6).

The engine firing order is 1-5-3-6-2-4.

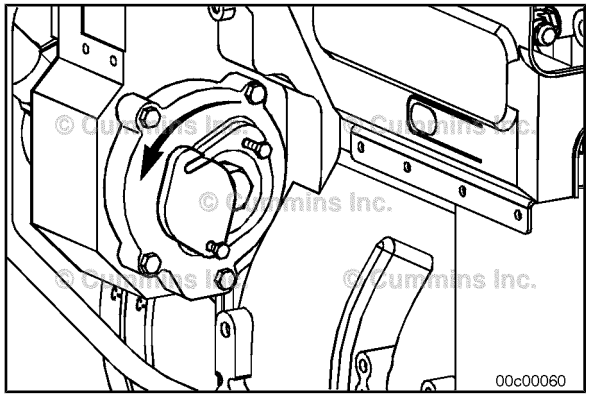

If the engine is **not** equipped with an air compressor:

Loosen the cover plate capscrews and rotate the cover or remove the oil fill tube, if equipped.

Using a 1½ inch socket, push the barring gear into the gear mesh and rotate the barring adapter **counterclockwise** to bar the engine.

Rock the barring device back and forth until it disengages.

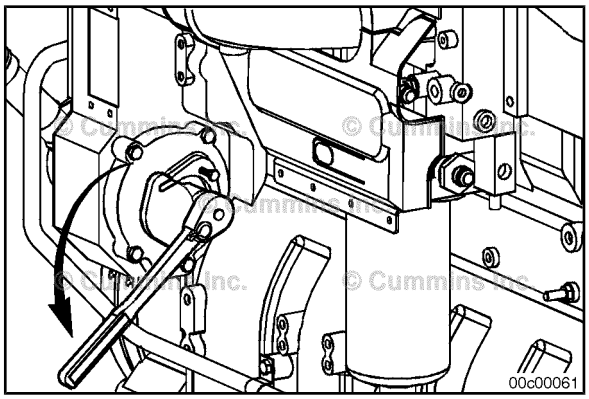

Each cylinder has four rocker levers:

- The exhaust valve rocker lever (1)
- The injector rocker lever (2)
- The intake valve rocker lever (3)
- The engine brake rocker lever (4).

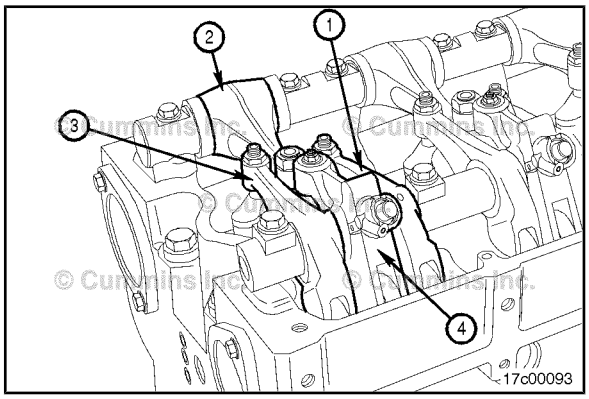

The intake valve rocker lever is **always** the long lever on the valve rocker lever shaft.

Early engine vibration dampers are marked with BRAKE SET 1-6, BRAKE SET 2-5, or BRAKE SET 3-4. The engine brakes **must** be set at the appropriate mark on these engines. Newer engine vibration dampers are marked with **only** A, B, or C, and are adjusted with the valves and injector on the same cylinder.

The valves, brakes, and the injectors on the same cylinder are adjusted at the same index mark on the vibration damper.

Injector and Valve Adjustment Sequence				
Bar Engine in Direction of Rotation	**Pulley Position**	**Set Cylinder Injector**	**Set Cylinder Valve**	**Set Cylinder Brake**
Start	A	1	1	1
Advance to	B	5	5	5
Advance to	C	3	3	3
Advance to	A	6	6	6
Advance to	B	2	2	2
Advance to	C	4	4	4
Firing Order: 1-5-3-6-2-4				

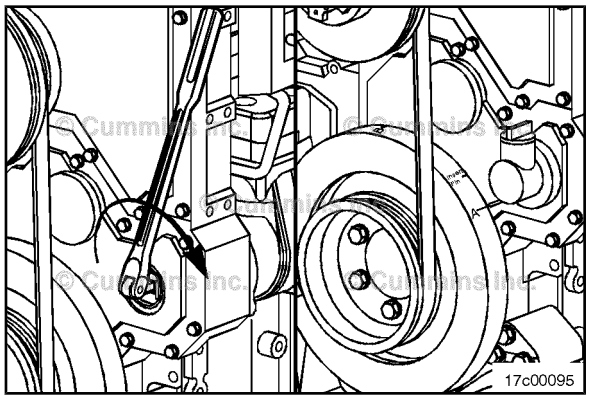

NOTE: For illustrative purposes, position A is shown as the first step. It is **not** necessary to start with position A, as long as the proper sequence is followed.

Use the compressor drive or barring device to bar the engine over in the direction of engine rotation, **clockwise** as viewed from the front of the engine. Align the A mark on the vibration damper with the pointer on the gear cover.

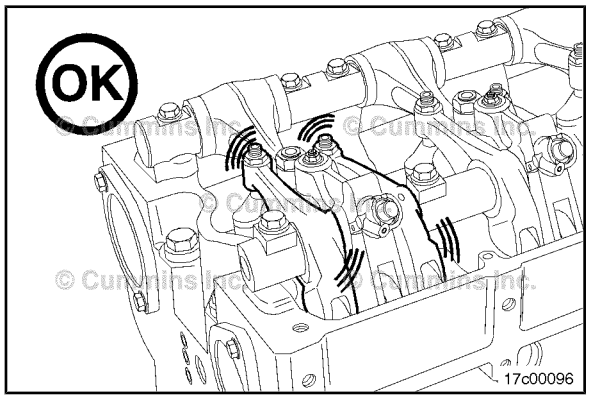

Check the valve rocker levers on the given cylinder to see if both intake and exhaust valves are closed.

Both sets of valves are closed when the rocker levers and the brake lever are loose. If both sets of valves are **not** closed, rotate the compressor drive gear one complete revolution, and align the A mark on the front damper with the pointer again.

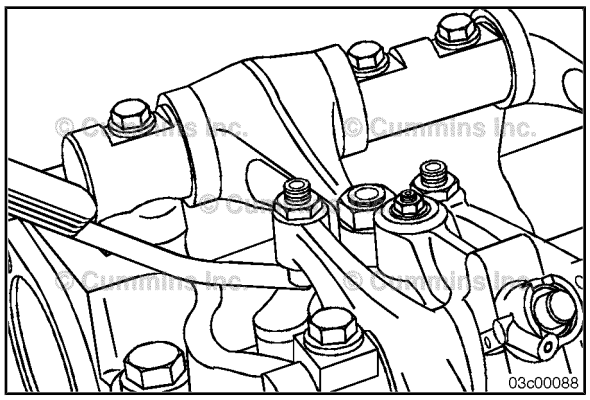

Valve Lash

Use feeler gauges to measure the amount of clearance (lash) between the crosshead and the rocker lever nose. Measure and record the intake, exhaust, and brake valve lash. If the valve lash is **not** within the specifications listed below, the valve **must** be adjusted. See the adjust step in this procedure.

Press the brake lever down to verify the camshaft follower is in contact with the camshaft prior to measurement of the brake lash.

ISX, QSX Series Valve Lash Recheck Limits			
Intake	**0.23 mm**	**minimum**	**0.006 in**
Intake	0.48 mm	maximum	0.019 in
Exhaust	0.56 mm	minimum	0.022 in
Exhaust	0.81 mm	maximum	0.032 in
Brake	6.87 mm	minimum	0.271 in
Brake	7.13 mm	maximum	0.281 in

Brake Running Clearance

Rotate the brake lever to the detent (neutral) position. Check the clearance between the engine brake actuator piston and the cross head guide pin (1). If the brake running clearance is **not** within specifications listed below, the running clearance **must** be adjusted. See the Adjust step in this procedure.

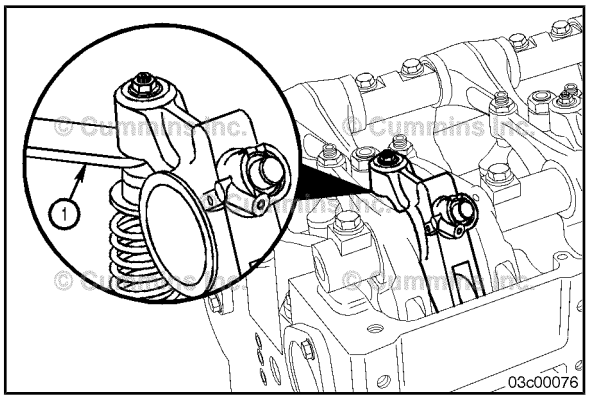

Brake Running Clearance		
mm		**in**
0.635	MIN	0.025
2.79	MAX	0.110

Injector Lash

There is no service procedure to check the injector free load.

Install the rocker lever cover. Refer to Procedure 003-011.

General Information

Read the entire procedure for overhead adjustment before attempting to perform this operation.

Valves, injectors, and engine brakes (if equipped) **must** be correctly adjusted for the engine to operate efficiently. Valve, injector, and engine brake adjustment **must** be performed using the values listed in this section.

After an engine rebuild or any major repair where the injector and valve setting **must** be disturbed, set all the valves, injectors, and brakes.

Adjust the valves, injectors, and engine brakes every 800,000 km [500,000 mi], 10,000 hours, or 5 years (whichever occurs first). Adjustment must be made after any major repair. After a major repair, the adjustment interval again becomes every 6,000 hours, or 2 years (whichever occurs first).

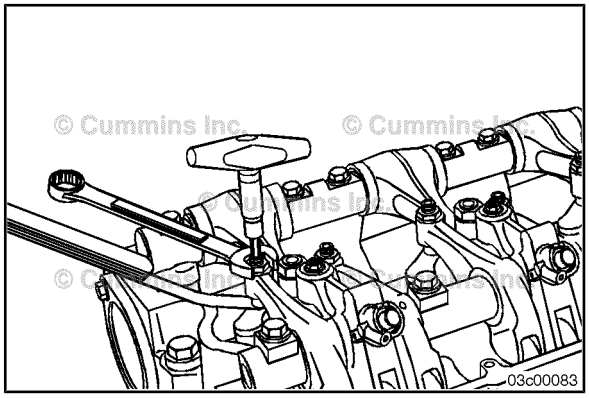

Valve, Brake, and Injector Adjustment Values	
Injector Adjustment is 8 N•m [70 in-lb]	
Intake Valve	0.35 mm [0.014 in]
Exhaust Valve	0.68 mm [0.027 in]
Engine Brake	7.00 mm [0.276 in]

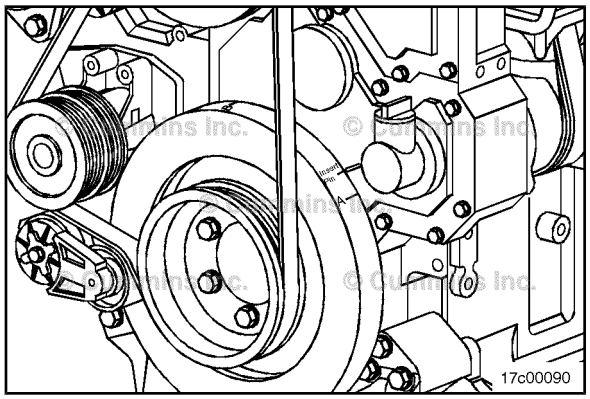

Adjust

Early engine vibration dampers are marked with BRAKE SET 1-6, BRAKE SET 2-5, or BRAKE SET 3-4. The engine brakes **must** be set at the appropriate mark on these engines. Newer engine vibration dampers are marked with **only** A, B, or C, and are adjusted with the valves and injector on the same cylinder.

Locate the valve set marks on the outside of the vibration damper.

The set marks are A, B, and C:

Set to mark A to adjust cylinder 1 or 6.
Set to mark B to adjust cylinder 2 or 5.
Set to mark C to adjust cylinder 3 or 4.

Two complete revolutions are required to set all valves, engine brakes, and injectors.

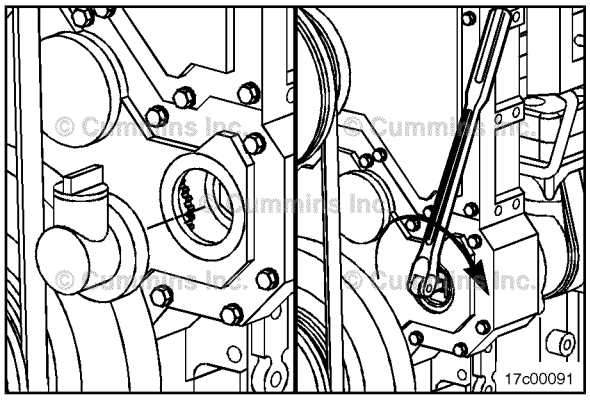

If the engine is equipped with an air compressor:

Remove the oil fill connector from the lower gear case cover.

Insert a 3/4-inch drive ratchet and extension into the air compressor drive.

Rotate the air compressor drive **clockwise** as viewed from the front of the engine.

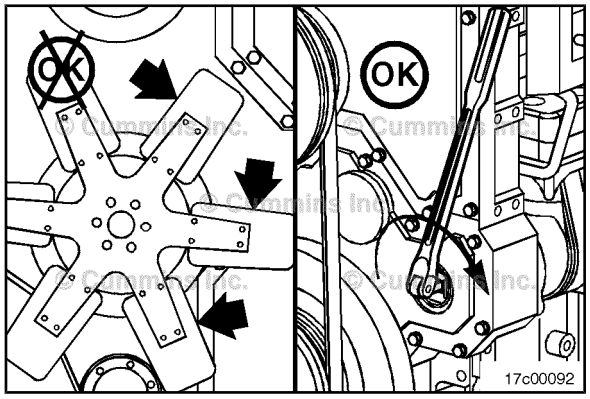

⚠WARNING⚠

Do not pull or pry on the fan to manually rotate the engine. To do so can damage the fan blades. Damaged fan blades can cause premature fan failures which can result in serious personal injury or property damage.

The crankshaft rotation is **clockwise** as viewed from the front of the engine.

The cylinders are numbered from the front of the engine (1-2-3-4-5-6).

The engine firing order is 1-5-3-6-2-4.

If the engine is **not** equipped with an air compressor:

Loosen the capscrews and rotate the cover or remove the oil fill tube, if equipped.

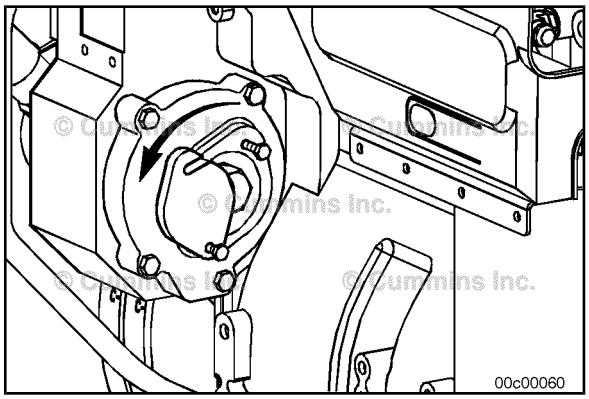

Using a 1½ inch socket, push the barring gear into the gear mesh and rotate the barring adapter **counterclockwise** to bar the engine.

Rock the barring device back and forth until it disengages.

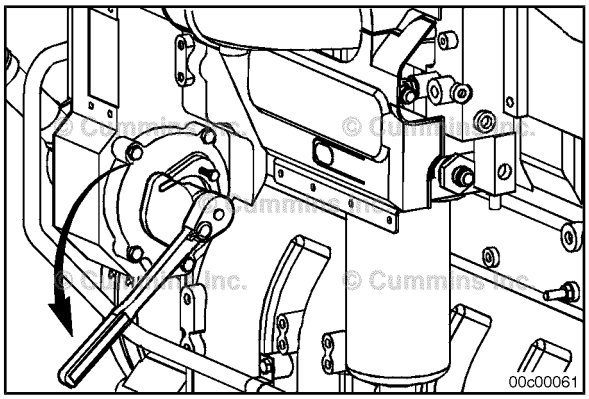

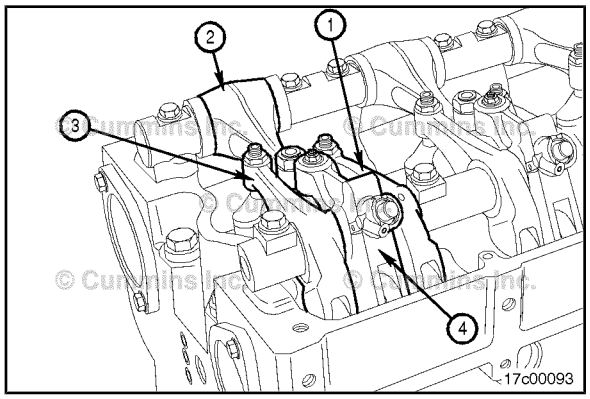

Each cylinder has four rocker levers:

- The exhaust valve rocker lever (1)
- The injector rocker lever (2)
- The intake valve rocker lever (3)
- The engine brake rocker lever (4).

The intake valve rocker lever is **always** the long lever on the valve rocker lever shaft.

Early engine vibration dampers are marked with BRAKE SET 1-6, BRAKE SET 2-5, or BRAKE SET 3-4. The engine brakes **must** be set at the appropriate mark on these engines. Newer engine vibration dampers are marked with **only** A, B, or C, and are adjusted with the valves and injector on the same cylinder.

The valves, brakes, and injectors on the same cylinder are adjusted at the same index mark on the vibration damper.

Injector and Valve Adjustment Sequence				
Bar Engine in Direction of Rotation	**Pulley Position**	**Set Cylinder Injector**	**Set Cylinder Valve**	**Set Cylinder Brake**
Start	A	1	1	1
Advance to	B	5	5	5
Advance to	C	3	3	3
Advance to	A	6	6	6
Advance to	B	2	2	2
Advance to	C	4	4	4
Firing Order: 1-5-3-6-2-4				

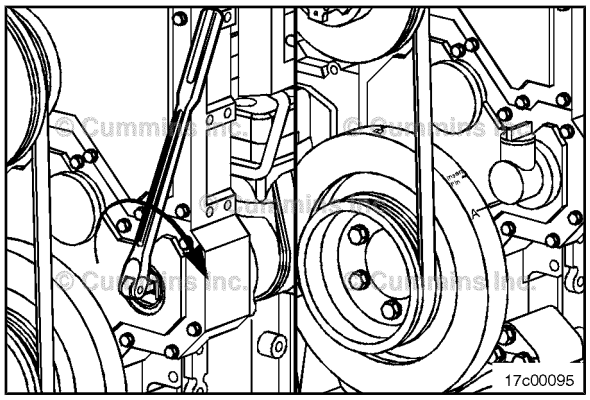

NOTE: For illustrative purposes, position A is shown as the first step. It is **not** necessary to start with position A, as long as the proper sequence is followed.

Use the compressor drive or barring device to bar the engine over in the direction of engine rotation, **clockwise** as viewed from the front of the engine. Align the A mark on the vibration damper with the pointer on the gear cover.

Check the valve rocker levers on the given cylinder to see if both intake and exhaust valves are closed.

Both sets of valves are closed when the rocker levers and the brake lever are loose. If both sets of valves are **not** closed, rotate the compressor drive gear one complete revolution, and align the A mark on the front damper with the pointer again.

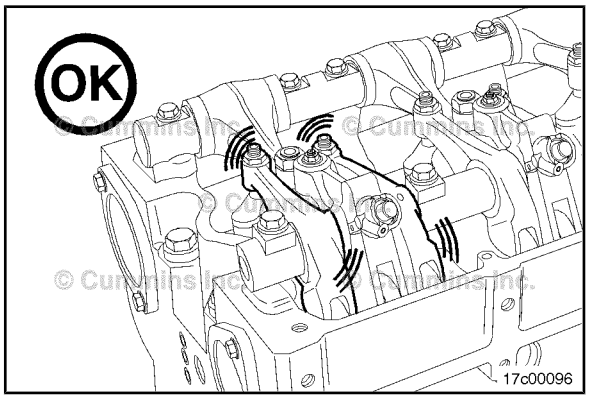

Loosen the injector adjusting screw locknut on the cylinder.

Do **not** use a click-type torque wrench.

Use a dial-type torque wrench with a range of 0 to 150 in-lb to tighten the injector rocker lever adjusting screw. If the screw chatters during setting, repair the screw and lever as required.

Back out the adjusting screw one or two turns.

Hold the torque wrench in a position that allows you to look in a direct line at the dial. This is to make sure the dial will be read accurately.

Make sure the parts are aligned, and squeeze the oil out of the valve and injector train by tightening the adjusting screw.

Use this initial adjustment to preload the valve train and injector.

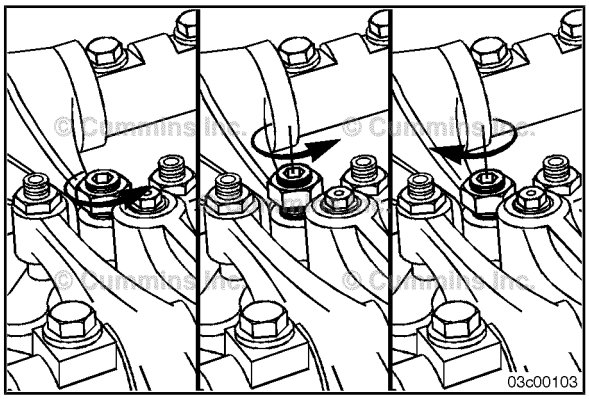

Tighten the injector lever adjusting screw.

Torque Value: 8 N•m [71 in-lb]

Back the adjusting lever screw out 1 or 2 turns.

Tighten the injector lever adjusting screw.

Torque Value: 8 N•m [71 in-lb]

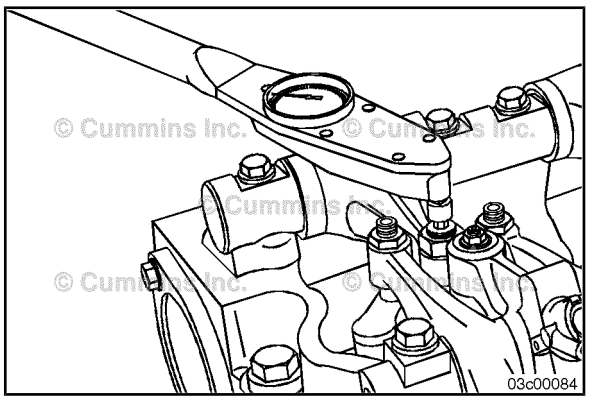

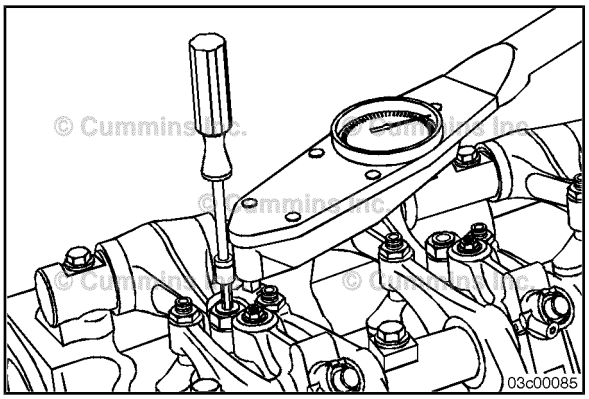

Hold the injector lever adjusting screw and tighten the adjusting screw locknut.

Torque Value: 75 N•m [55 ft-lb]

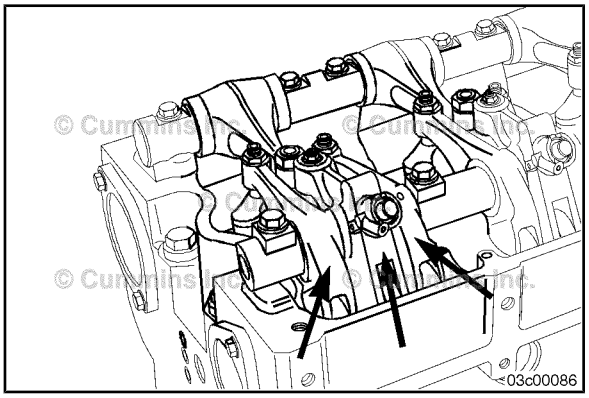

After setting the injector on a cylinder, set the valves and engine brakes on the same cylinder.

Early engine vibration dampers are marked with BRAKE SET 1-6, BRAKE SET 2-5, or BRAKE SET 3-4. The engine brakes **must** be set at the appropriate mark on these engines. Newer engine vibration dampers are marked with **only** A, B, or C, and are adjusted with the valve and injector on the same cylinder.

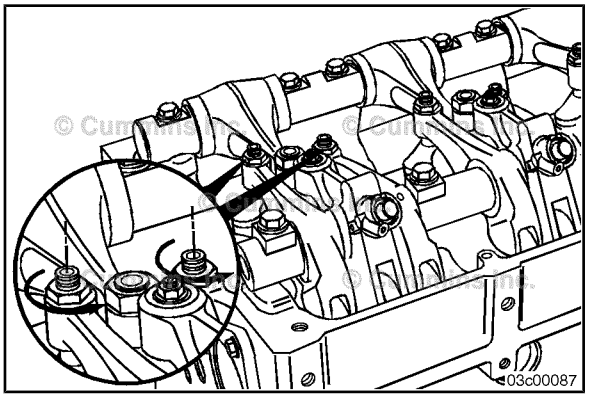

With the set mark aligned with the pointer on the gear cover and both sets of valves closed on the cylinder, loosen the locknuts on the intake and exhaust valve adjusting screws.

Back out the adjusting screws one or two turns.

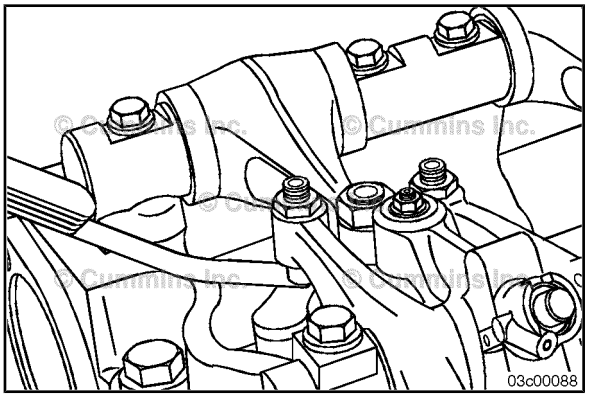

Select a feeler gauge for the correct valve lash specification.

Valve Lash Specification			
	mm		in
Intake	0.36	NOM	0.014
Exhaust	0.69	NOM	0.027

Insert the feeler gauge between the top of the crosshead and the rocker lever nose pad.

Make sure the feeler gauge is completely under the pivoting rocker lever nose pad.

Tighten the adjusting screw.

Torque Value: 0.6 N•m [5 in-lb]

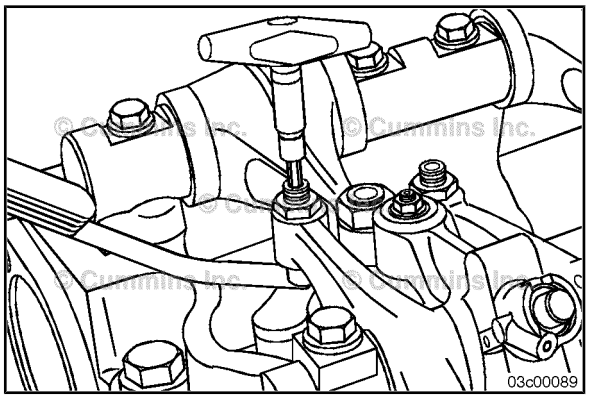

Use a torque wrench and crows foot adapter to tighten the locknut.

Hold the adjusting screw in this position. The adjusting screw **must not** turn when the locknut is tightened.

Torque Value: 45 N•m [33 ft-lb]

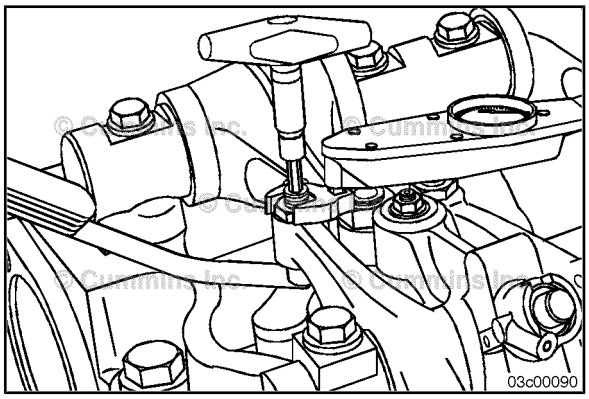

After tightening the locknut to the correct torque value, remove the feeler gauge.

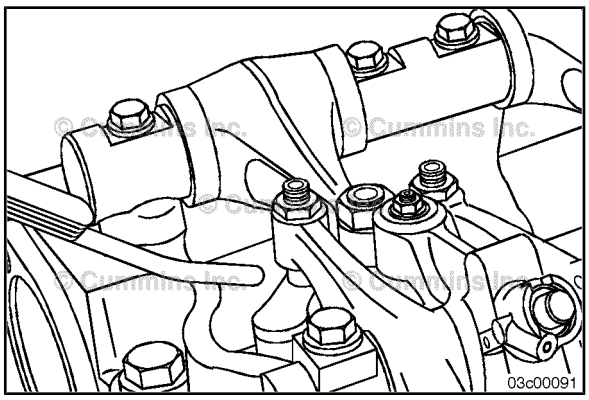

⚠CAUTION⚠

To get maximum brake operating efficiency and to prevent engine damage, the brake adjustment instructions must be followed.

For older engines, locate the engine brake set marks on the outside of the vibration damper.

The set marks are BRAKE SET 1-6, and BRAKE SET 2-5, and BRAKE SET 3-4.

BRAKE SET 1-6: Cylinder 1 or 6 adjust

BRAKE SET 2-5: Cylinder 2 or 5 adjust

BRAKE SET 3-4: Cylinder 3 or 4 adjust

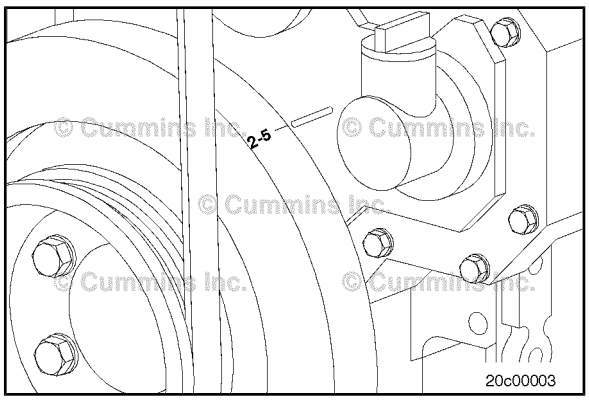

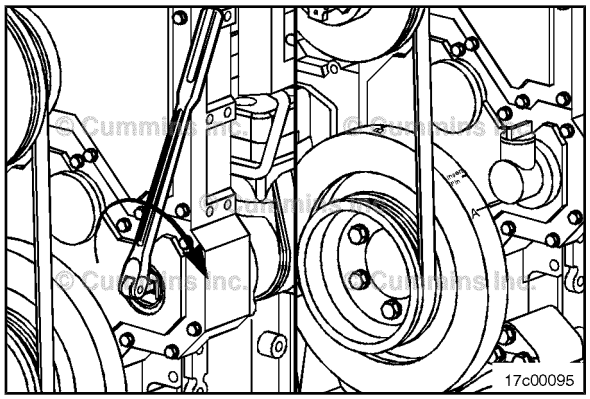

Use the compressor drive or barring device to bar the engine over in the direction of rotation, **clockwise** as viewed from the front of the engine. Align the A mark on the vibration damper with the pointer on the gear cover.

For illustrative purposes, position A is shown as the first step. It is **not** necessary to start with position A, as long as the proper sequence is followed.

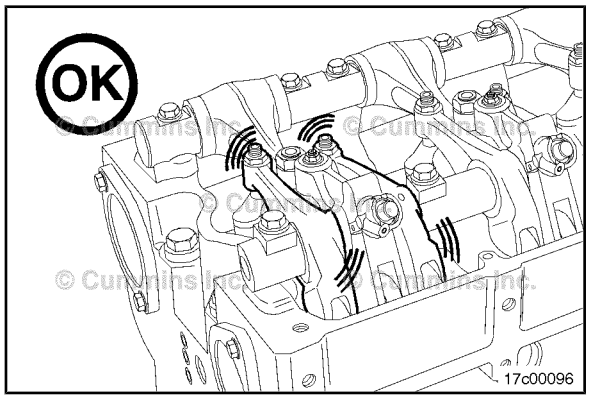

Check the valve rocker levers on the given cylinder to see if both intake and exhaust valves are closed.

Both sets of valves are closed when the rocker levers and the brake lever are loose. If both sets of valves are **not** closed, rotate the compressor drive gear one complete revolution, and align the A mark on the front damper with the pointer again.

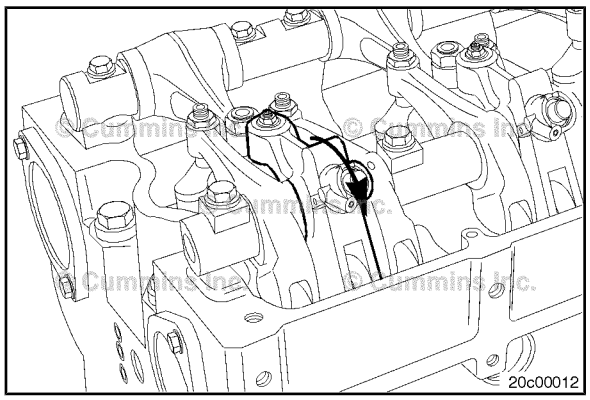

Press the engine brake lever down to verify the camshaft follower is in contact with the camshaft.

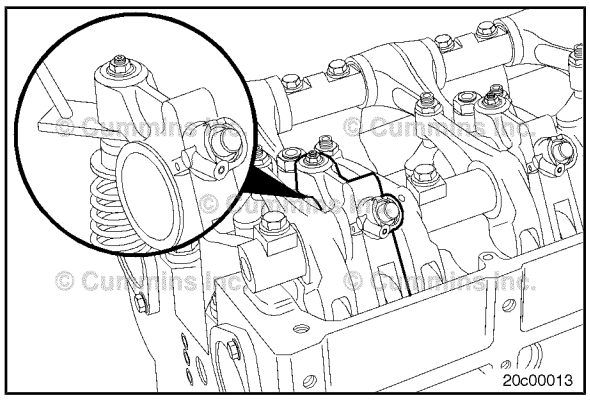

Loosen the locknut on the brake lever adjusting screw, and back out the adjusting screw one turn.

Insert the feeler gauge, Part Number 3163530, between the bottom of the engine brake piston and the top of the exhaust valve crosshead.

Brake Lever Lash Specification

mm		in
7.00	NOM	0.276

Tighten the adjusting screw until drag on the feeler gauge is felt. Proper drag means that there is no motion of the brake lever camshaft follower against the cam lobe.

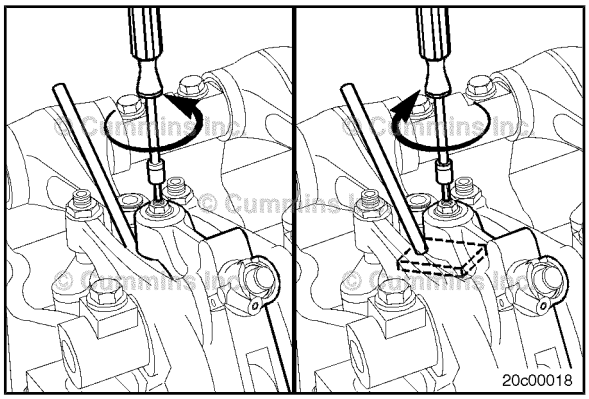

Hold the engine brake lever adjusting screw and tighten the locknut.

Torque Value: 20 N•m [177 in-lb]

Remove the feeler gauge.

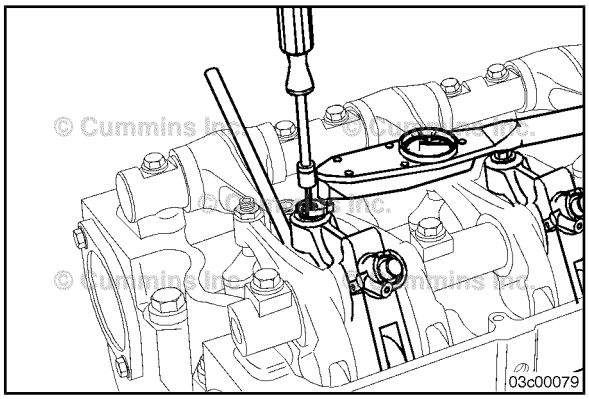

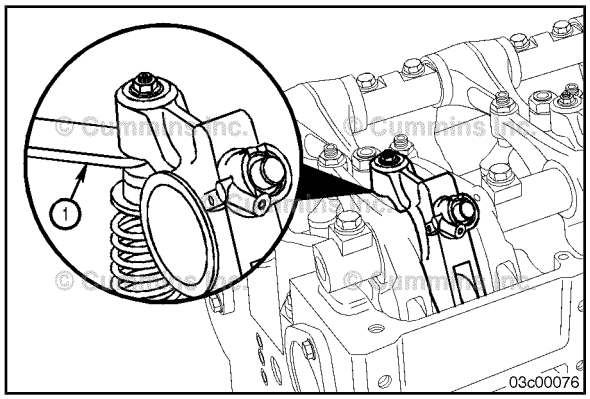

⚠CAUTION⚠

Engine damage can occur if the running clearance is not within specifications.

Check the running clearance:

1. Rotate the engine brake rocker lever to the detente (neutral) position.
2. Check the clearance (1) between the engine brake lever actuator piston and the crosshead guide pin.

Engine Brake Rocker Lever Running Clearance		
mm		in
0.635	MIN	0.025
2.790	MAX	0.110

If the running clearance does **not** meet specification, loosen, but do **not** remove the rocker shaft capscrews, and rotate the shaft in the direction required to bring the running clearance within the listed specification. It is critical that this clearance be set and verified on all six brake levers. Engine damage can result if this task is **not** completed.

Check the brake running clearance.

The rocker lever shafts **must** be adjusted so that all three engine brake levers fall within the given running clearance specification.

Repeat the process to adjust all injectors, engine brakes, and valves according to the chart shown below.

Injector and Valve Adjustment Sequence				
Bar Engine in Direction of Rotation	Pulley Position	Set Cylinder Injector	Set Cylinder Valve	Set Cylinder Brake
Start	A	1	1	1
Advance to	B	5	5	5
Advance to	C	3	3	3
Advance to	A	6	6	6
Advance to	B	2	2	2
Advance to	C	4	4	4
Firing Order: 1-5-3-6-2-4				

Section 7 - Maintenance Procedures at 10,000 Hours or 5 Years

Section Contents

Page
Air Compressor Discharge Lines 7-1
General Information....7-1
Maintenance Check....7-2
Fan Hub, Belt Driven 7-1
Maintenance Check....7-1
Maintenance Procedures - Overview 7-1
General Information....7-1

This Page Left Intentionally Blank

Maintenance Procedures - Overview

General Information

All maintenance checks and inspections listed in previous maintenance intervals **must** also be performed at this time, in addition to those listed under this maintenance interval.

Fan Hub, Belt Driven

Maintenance Check

Inspect the fan hub for the following:

- Freedom of rotation
- Cracks
- Grease seal leakage.

Repair or replace the fan hub if the fan hub does **not** rotate freely or if there is evidence of cracks or grease seal leakage.

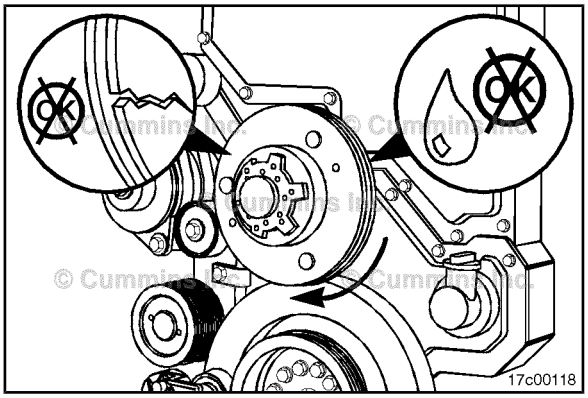

Measure the fan hub end clearance. Fan hubs with “step-bore” shafts and **not** bearing spacers **must** be 0.08 to 0.25 mm [0.003 to 0.010 in] end clearance.

Fan hubs with “through-bore” shafts with inner and outer bearing spacers **must** be 0.08 to 0.41 mm [0.003 to 0.016 in] end clearance.

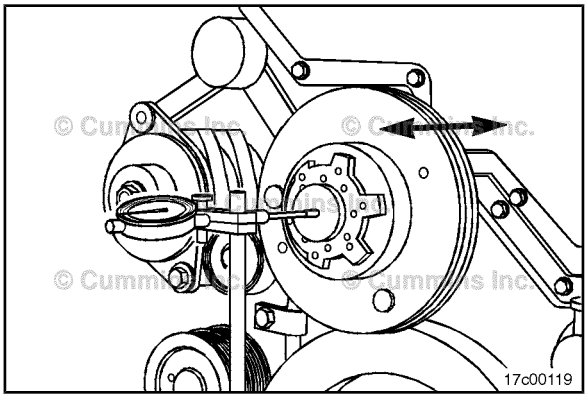

Air Compressor Discharge Lines

General Information

All air compressors have a small amount of lubricating oil carryover that lubricates the piston rings and moving parts. When this lubricating oil is exposed to normal air compressor operating temperatures over time, the lubricating oil will form varnish or carbon deposits. If the following maintenance check are not performed, the air compressor piston rings will wear and not seal correctly.

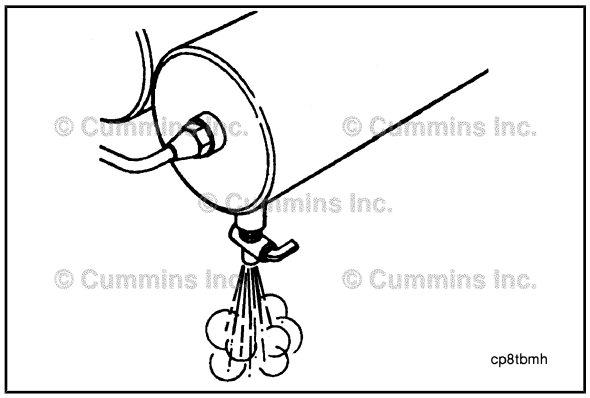

Maintenance Check

⚠WARNING⚠

Wear appropriate eye and face protection when using compressed air. Flying debris and dirt can cause personal injury.

Shut off the engine.

Open the drain valve on the wet tank to release the system air pressure.

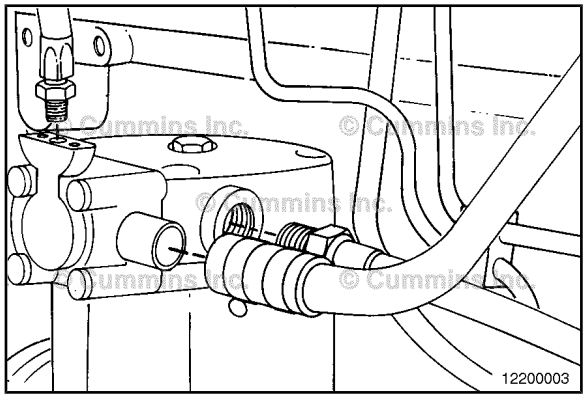

Remove the air compressor discharge line from the air compressor. Location of the air compressor discharge line can be found in Flow Diagram, Compressed Air System in System Diagrams (Section D).

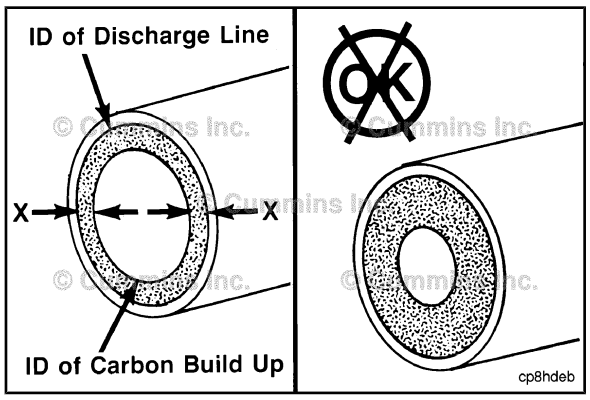

Measure the total carbon deposit thickness inside the air discharge line as shown. If the total carbon deposit (X + X) exceeds 2 mm [1/16 in], clean and inspect the cylinder head, the valve assembly, and the discharge line. Replace if necessary. Contact the Cummins Authorized Repair Location for procedures.

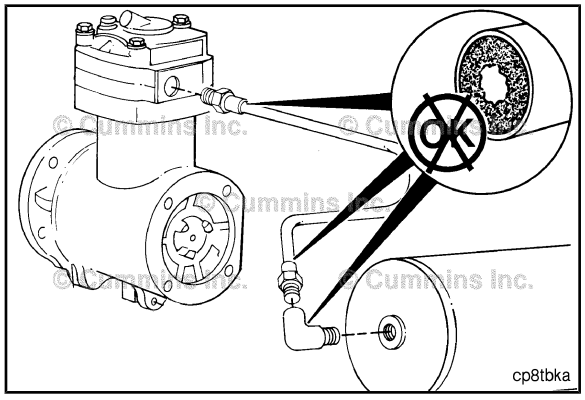

If the total carbon deposit exceeds specifications, continue checking the air discharge line connections up to the first tank until total carbon deposit is less than 2 mm [1/16 in]. Clean or replace any lines or connections that exceed this specification.

Inspect any air driers, splitter valves, pressure relief valves, and alcohol injectors for carbon deposits or malfunctioning parts. Inspect for air leaks. Maintain and repair the parts according to the manufacturer's specifications.

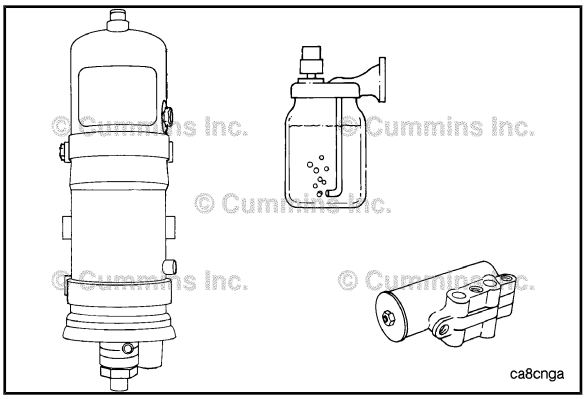

© Cummins Inc.

Notes

Section A - Adjustment, Repair, and Replacement

Section Contents

Page
Air Starting Motor A-1
General Information A-1
Battery Cables and Connections A-1
Initial Check A-1
Engine Storage - Long Term A-2
General Information A-2
Fuel Shutoff Valve A-2
Inspect for Reuse A-3
Install A-4
Remove A-2

This Page Left Intentionally Blank

Air Starting Motor

General Information

The air starting motor system (tanks, line sizes, and valves) is designed and installed by the original equipment manufacturers and the starting motor suppliers. Reference any questions about the air starting systems to the manufacturer.

- Do **not** operate the air starting motor with air pressure lower than 480 kPa [70 psi].
- Maintain the air starting motor according to the manufacturer's recommendations.
- For maximum efficiency, the hoses, tubes, and lines **must not** leak.
- Refer to the OEM service manual and manufacturer manuals for specific information regarding the starting motors, valves, and systems.

Battery Cables and Connections

Initial Check

There are two possible heavy-duty battery connections:

- Battery terminal and clamp (1)
- Threaded battery terminal and nut (2).

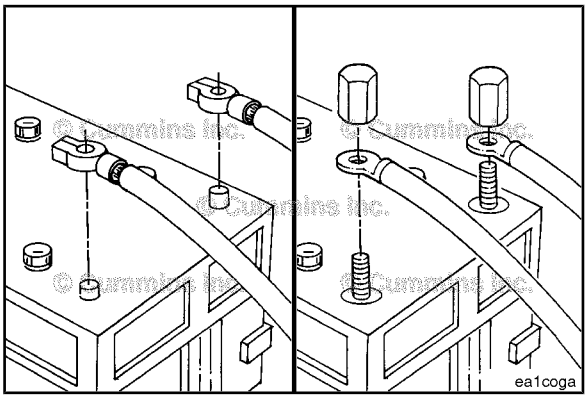

⚠WARNING⚠

Batteries can emit explosive gases. To reduce the possibility of personal injury, always ventilate the compartment before servicing the batteries. To reduce the possibility of arcing, remove the negative (-) battery cable first and attach the negative (-) battery cable last.

Remove and inspect the battery cables and connections for cracks or corrosion.

Replace broken terminals, connectors, or cables.

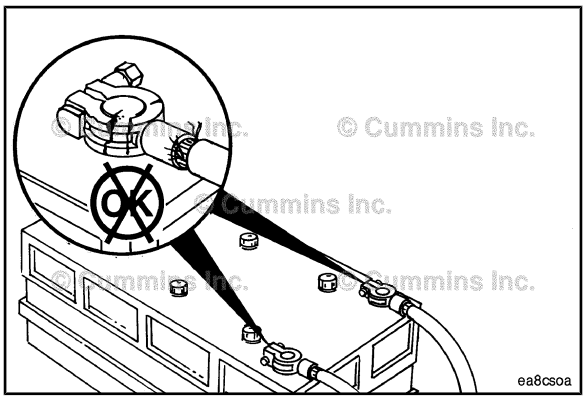

If the connections are corroded, use a battery brush or wire brush to clean the connections until shiny.

Make sure all debris is removed from the connecting surfaces.

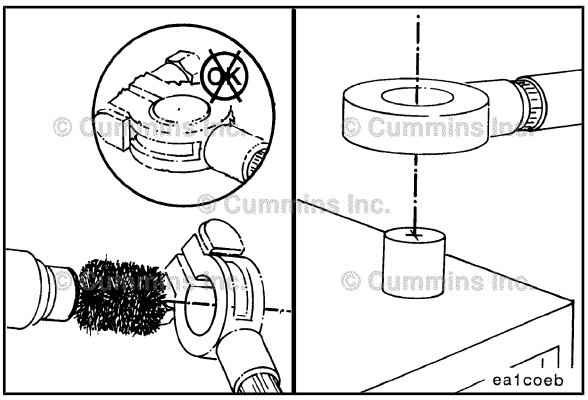

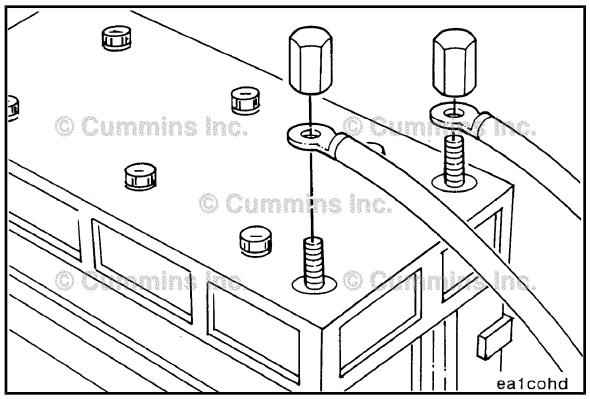

⚠WARNING⚠

Batteries can emit explosive gases. To reduce the possibility of personal injury, always ventilate the compartment before servicing the batteries. To reduce the possibility of arcing, remove the negative (-) battery cable first and attach the negative (-) battery cable last.

Install the cables and tighten the battery connections.

Coat the terminals with grease to prevent corrosion.

Engine Storage - Long Term

General Information

If the engine will be out of service longer than 6 months, take special precautions to prevent rust. Contact the nearest Cummins Authorized Repair Location for information concerning engine storage procedures.

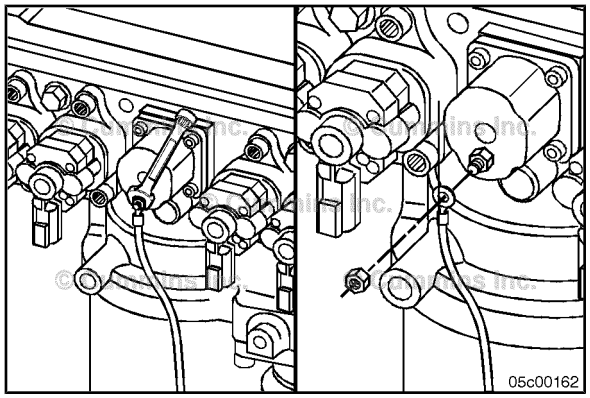

Fuel Shutoff Valve

Remove

Use a wrench to hold the nut at the base of the post.

Use a 3/8-inch wrench to remove the nut holding the electrical connection of the fuel shutoff valve coil.

Remove the connection.

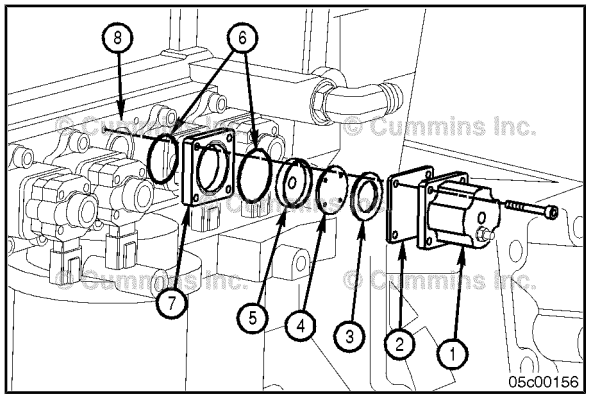

Remove the four Allen head capscrews.

Remove the coil (1) and the fuel shield (2).

Remove the valve spring washer (3), valve disc (4), and actuator disc (5) from the actuator housing (7) from the IFSM (8).

Discard the o-rings (6).

Inspect for Reuse

⚠ WARNING ⚠

When using solvents, acids, or alkaline materials for cleaning, follow the manufacturer's recommendations for use. Wear goggles and protective clothing to reduce the possibility of personal injury.

⚠ WARNING ⚠

Some solvents are flammable and toxic. Read the manufacturer's instructions before using.

Use mineral spirits. Clean all of the parts **except** the coil assembly.

NOTE: Do **not** get solvent on the coil. Clean the coil with a dry cloth. Use a 200-grit emery cloth and a flat surface to polish the coil surface.

Check the valve disc, valve seat, and actuator disc for dirt, metal parts, bonding separation, corrosion, cracks, or wear. Replace if necessary.

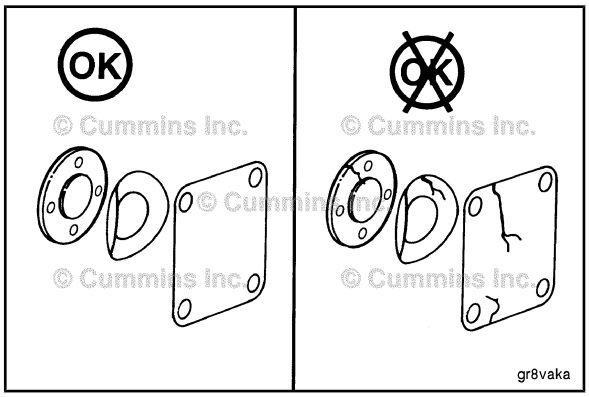

Use a wire brush to clean any corrosion from the coil terminal.

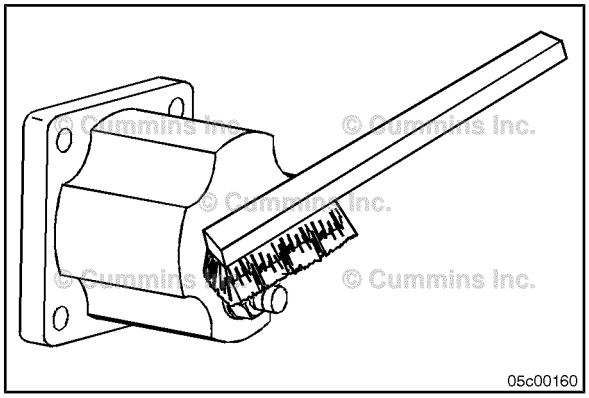

Check the coil assembly with a multimeter. Replace the solenoid if the resistance is **not** to specification.

Fuel System Shutoff Valve Solenoid Specifications		
Voltage	**Resistance Minimum (Ohms)**	**Resistance Maximum (Ohms)**
6 VDC	1	5
12 VDC	6	15
24 VDC	24	50
32 VDC	42	80
36 VDC	46	87
48 VDC	92	145
74 VDC	315	375
115 VAC	645	735

NOTE: If the coil assembly shows 0 ohm, there is an electrical short in the coil.

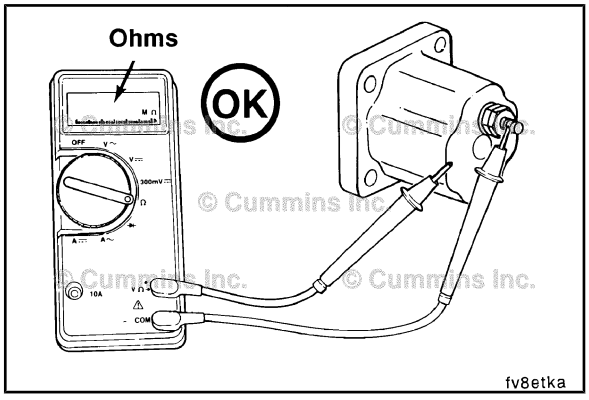

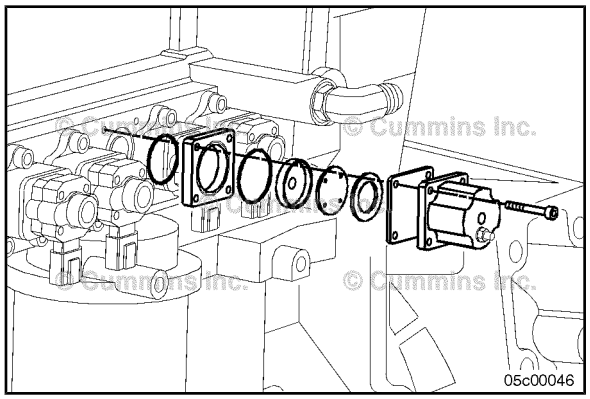

Install

Assemble the shutoff valve as shown. Install these parts as follows.

Install a new o-ring between the spacer and the electronic control valve body.

Install the spacer o-ring groove toward the coil.

Install the actuator disc with the cup side toward the coil.

Install the spring washer with the cup side toward the coil.

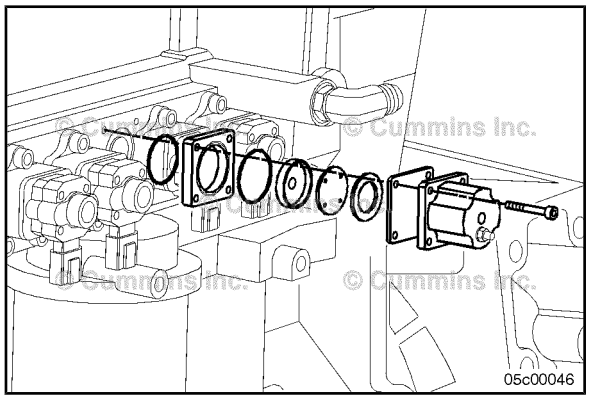

Align the actuator disc, spacer, and valve disc on the electronic control valve body.

Install a new o-ring.

Put the spring washer on the valve disc with the cavity side positioned upward.

NOTE: The coil **must** be oriented with the electrical connection post on the bottom.

NOTE: Make sure the shutoff valve coil is the correct voltage (12 VDC). The coil voltage and part number are cast into the terminal connection end of the coil.

Install the fuel shield and coil onto the front cover.

Install a new o-ring and tighten the Allen head capscrews.

Torque Value: 3.4 N•m [30 in-lb]

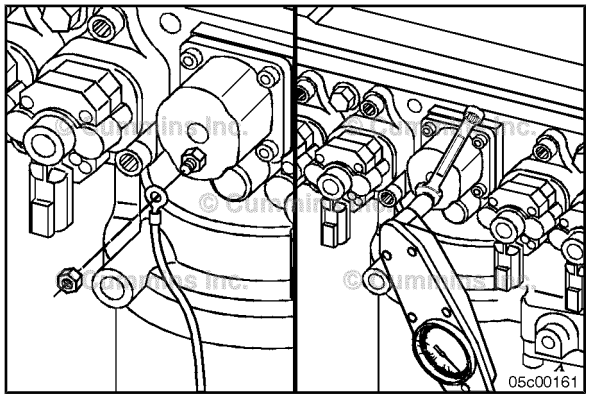

Install the electrical connection on the fuel shutoff valve.

Install the nut onto the threaded post of the coil.

Use a wrench to hold the nut at the base of the post firmly while tightening the connection nut.

Torque Value: 3 N•m [25 in-lb]

Section D - System Diagrams

Section Contents

Page
Flow Diagram, Air Intake System D-13
Flow Diagram D-13
Automotive, Industrial with CM570 and Power Generation without CM570 ..... D-13
With CM870 ..... D-14
Flow Diagram, Compressed Air System D-22
Flow Diagram D-22
Flow Diagram, Cooling System D-10
Flow Diagram D-10
Flow Diagram, Exhaust System D-15
Flow Diagram D-15
Automotive, Industrial with CM570 and Power Generation without CM570 ..... D-15
With CM870 ..... D-17
Automotive With CM871 ..... D-19
Automotive With CM871 ..... D-20
Automotive With CM871 ..... D-21
Flow Diagram, Fuel System D-2
Flow Diagram D-2
Industrial CM570 and Power Generation without CM570 ..... D-2
Flow Diagram, Lubricating Oil System D-4
Flow Diagram D-4
With CM870 ..... D-6
Automotive With CM871 ..... D-9
System Diagrams - Overview D-1
General Information D-1

This Page Left Intentionally Blank

System Diagrams - Overview

General Information

The following drawings show the flow through the engine systems. Although parts can change between different applications and installations, the flow remains the same. The systems shown are:

- Fuel System
- Lubricating Oil System
- Coolant System
- Intake Air System
- Exhaust System
- Compressed Air System.

Knowledge of the engine systems can help you in troubleshooting, service, and general maintenance of your engine.

Flow Diagram, Fuel System

Flow Diagram

Industrial CM570 and Power Generation without CM570

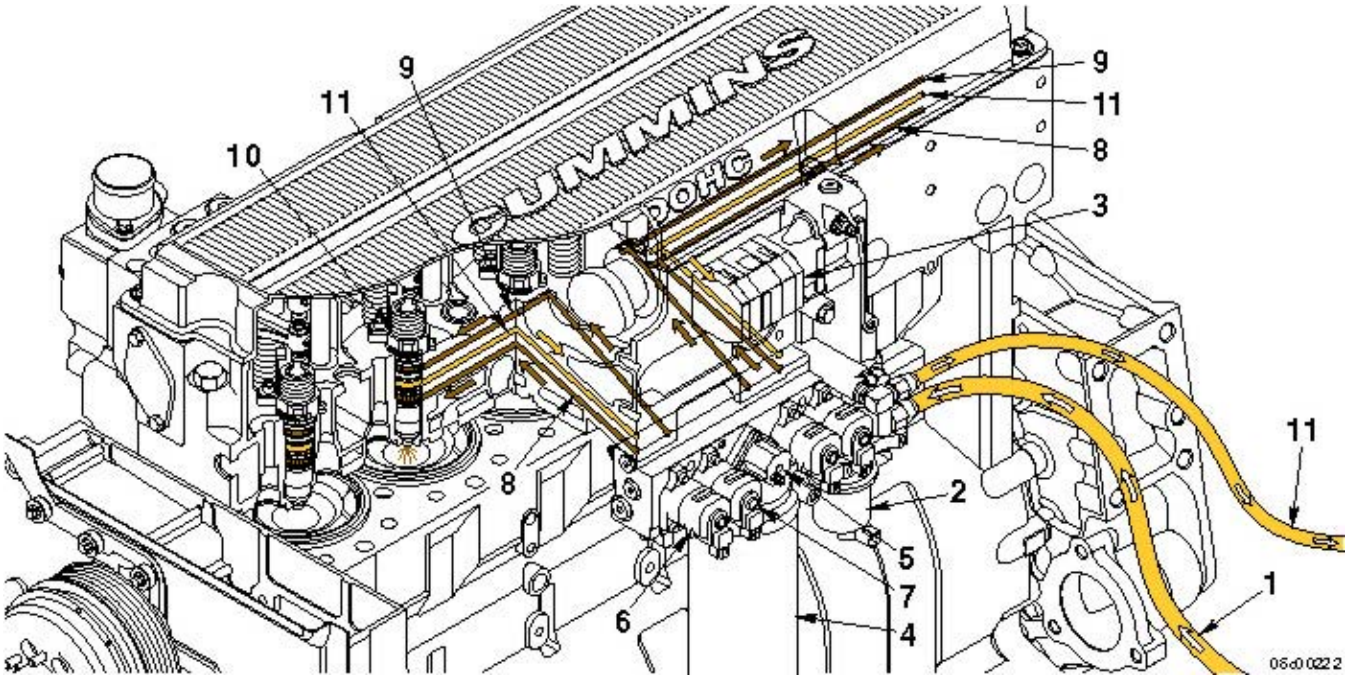

QSX15 With Lift Pump

1. Fuel supply from tank
2. Fuel lift pump
3. Fuel pump
4. Pressure fuel filter
5. Fuel shutoff valve
6. Fueling actuator
7. Timing actuator
8. Fueling supply to injector
9. Timing fuel supply to injector
10. Injector
11. Fuel drain to tank.

Flow Diagram, Fuel System

Flow Diagram

Industrial CM570 and Power Generation without CM570

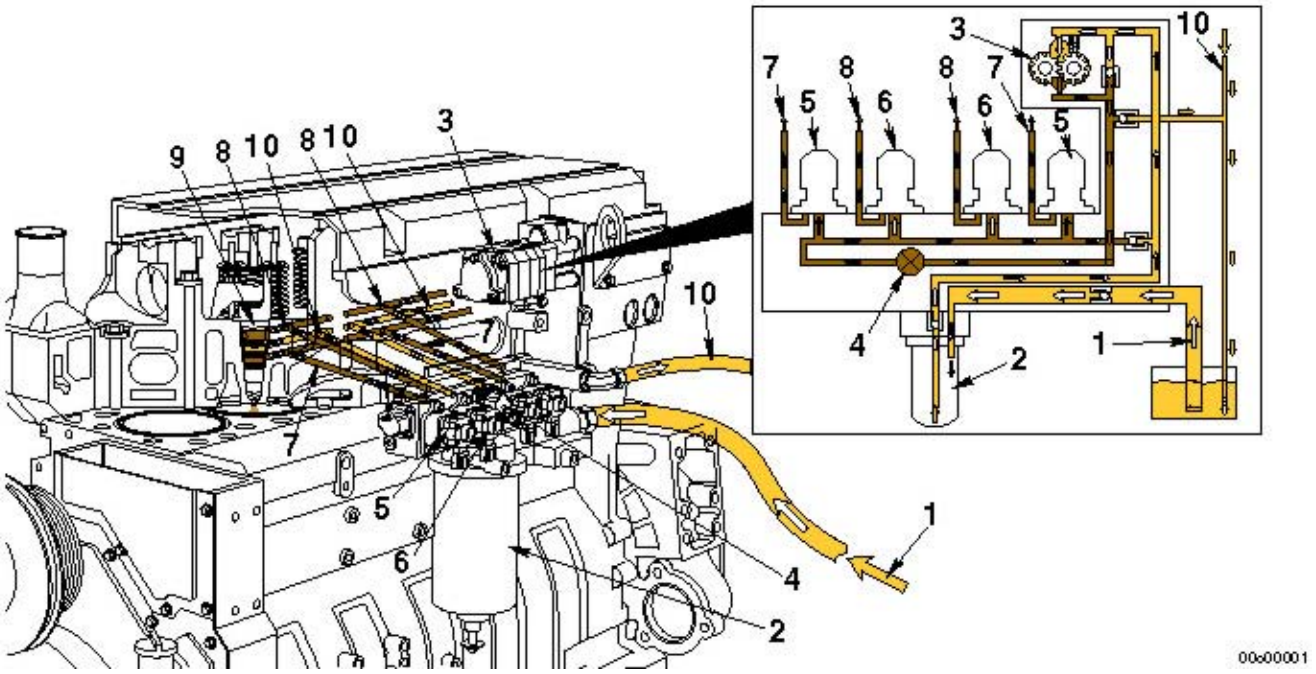

QSX15 Without Lift Pump

1. Fuel supply from tank
2. Fuel filter
3. Gear pump
4. Fuel shutoff valve
5. Rail metering actuator
6. Timing actuator
7. Rail metering supply to injector
8. Timing fuel supply to injector
9. Injector
10. Fuel drain to tank.

Flow Diagram, Lubricating Oil System

Flow Diagram

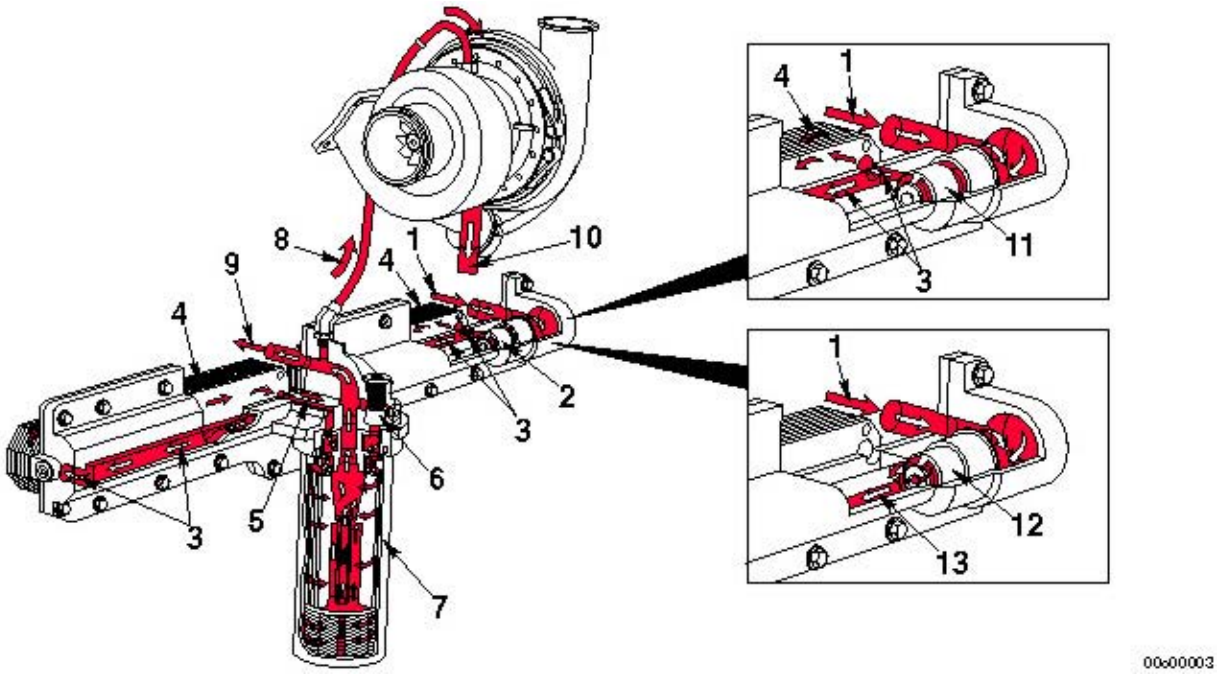

Vertical Bypass

1. Lubricating oil flow from oil pump
2. Thermostat
3. Oil cooler bypass flow
4. Flow through oil cooler
5. Flow return to filter head
6. Filter bypass valve
7. Oil filter
8. Flow to turbocharger
9. Flow to main oil rifle
10. Oil drain from turbocharger
11. Thermostat open - oil flows through oil cooler
12. Thermostat closed - oil flows directly to oil filter
13. Flow to oil filter.

Flow Diagram, Lubricating Oil System

Flow Diagram

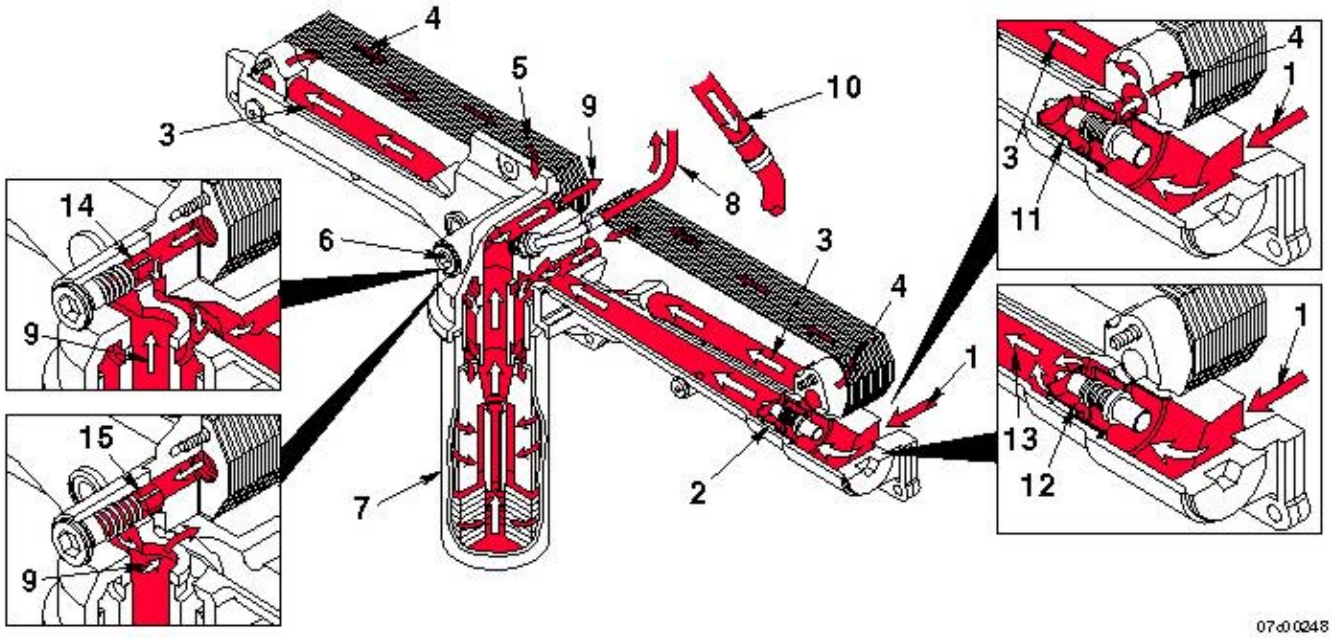

Horizontal Bypass

1. Lubricating oil flow from oil pump
2. Thermostat
3. Oil cooler bypass flow
4. Flow through oil cooler
5. Oil cooler flow return to filter head
6. Filter bypass valve
7. Oil filter
8. Flow to turbocharger
9. Flow to main oil rifle
10. Oil drain from turbocharger
11. Thermostat open - oil flows through oil cooler
12. Thermostat closed - oil flows directly to oil filter
13. Flow to oil filter
14. Bypass valve open - oil flows to oil filter
15. Bypass valve closed - oil flows directly to main oil rifle

With CM870

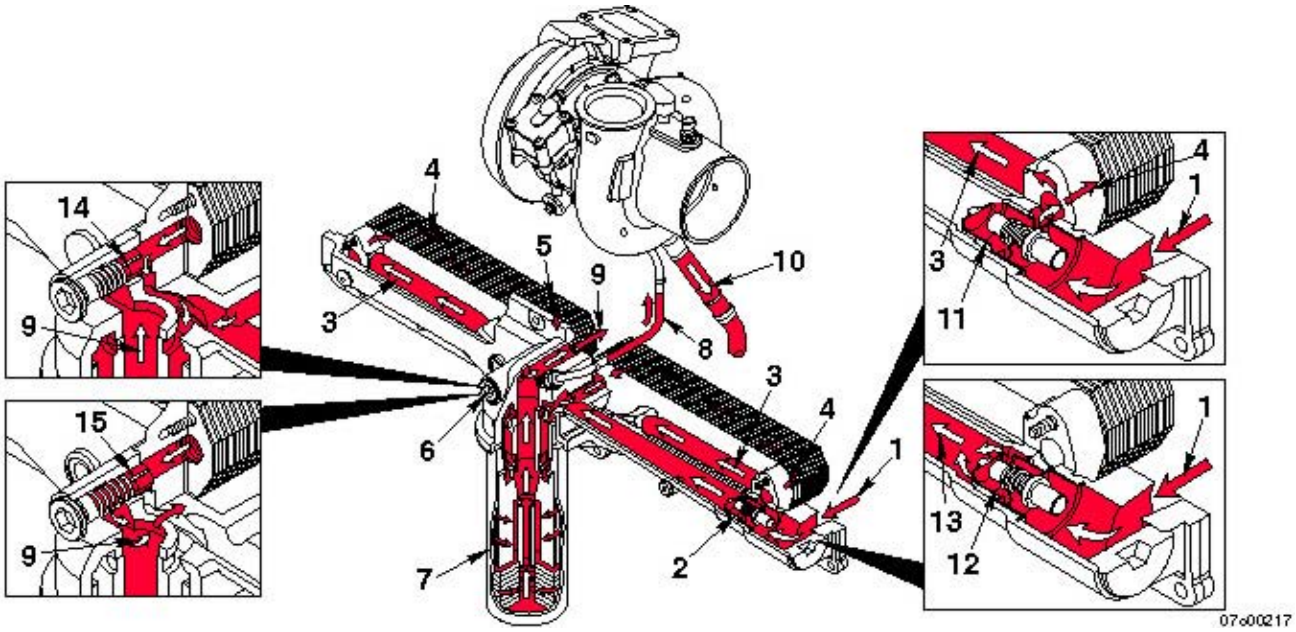

Lubricating Oil Filter, Cooler and Bypass

1. Lubricating oil flow from oil pump
2. Thermostat
3. Oil transfer to rear oil cooler
4. Flow through oil cooler
5. Oil cooler flow return to filter head
6. Filter bypass valve
7. Oil filter
8. Flow to turbocharger
9. Flow to main oil rifle
10. Oil drain from turbocharger
11. Thermostat open - oil flows through oil cooler
12. Thermostat closed - oil flows directly to oil filter
13. Flow to oil filter
14. Bypass valve closed - oil flows to oil filter
15. Bypass valve open - oil flows directly to main oil rifle.

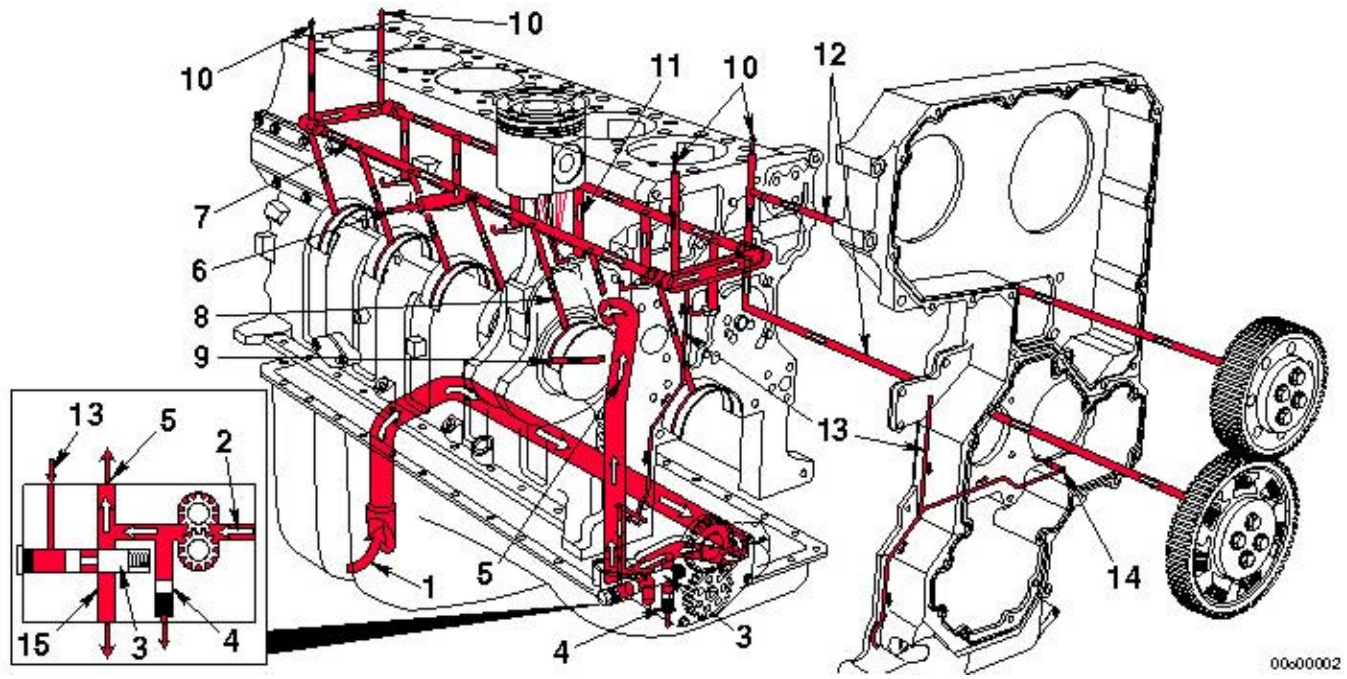

Lubricating Oil Pump and Power Components

1. Lubricating oil flow from oil pan through suction tube
2. Flow from suction tube to oil pump
3. Pressure regulator
4. High-pressure relief valve
5. Flow from oil pump to oil cooler/filter head housing
6. Oil return from oil cooler/filter head housing to main oil rifle
7. Main oil rifle
8. Flow to main bearing
9. Flow from main bearing to crankshaft
10. Flow to cylinder head
11. Flow to piston cooling nozzle
12. Flow to idler gears
13. Oil transfer from main oil rifle
14. Flow to air compressor
15. Rifle sensing regulator dump to inlet.

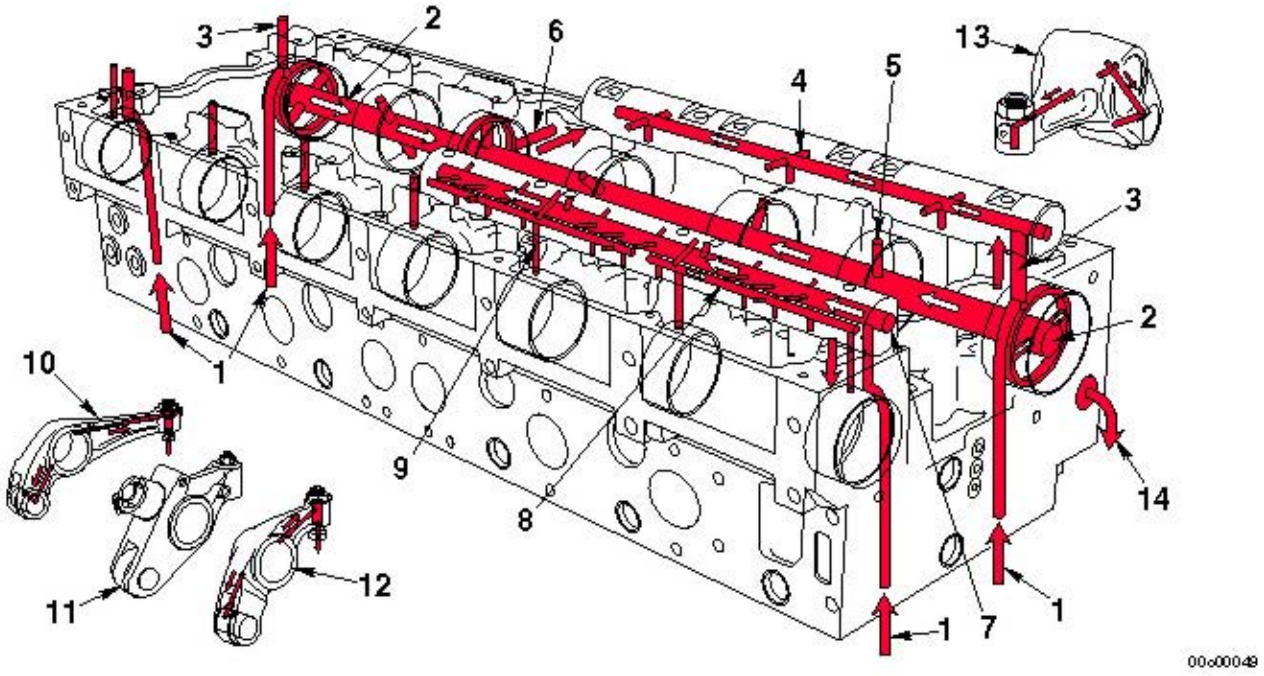

Overhead Components

1. Lubricating oil flow from cylinder block to cylinder head
2. Flow around grooved head to drilled camshaft and rocker lever shafts
3. Flow to injector rocker lever shafts
4. Flow to injector rocker levers
5. Flow to injector camshaft journal bearings
6. Flow to fuel pump
7. Flow to valve rocker lever shaft
8. Flow to valve rocker levers
9. Flow to valve camshaft journal bearings
10. Intake valve rocker lever
11. Engine brake lever
12. Exhaust valve rocker lever
13. Injector rocker lever
14. Oil drain from overhead (front and rear).

Automotive With CM871

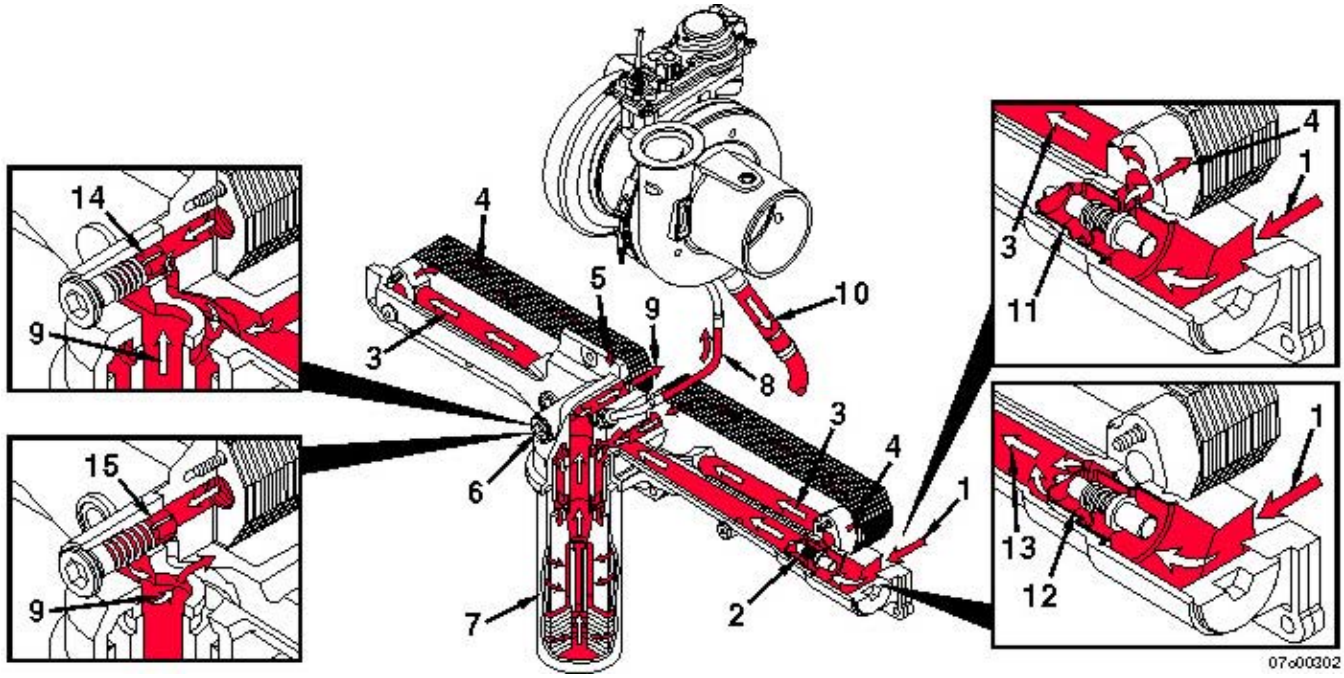

1. Lubricating oil flow from oil pump
2. Thermostat
3. Oil cooler bypass flow
4. Flow through oil cooler
5. Flow return to filter head
6. Filter bypass valve
7. Oil Filter
8. Flow to turbocharger
9. Flow to main oil rifle
10. Oil drain from turbocharger
11. Thermostat open - oil flows through oil cooler
12. Thermostat closed - oil flows directly to oil filter
13. Flow to oil filter
14. Bypass valve opened - oil flows to oil filter
15. Bypass valve open - oil flows directly to main oil rifle.

Flow Diagram, Cooling System

Flow Diagram

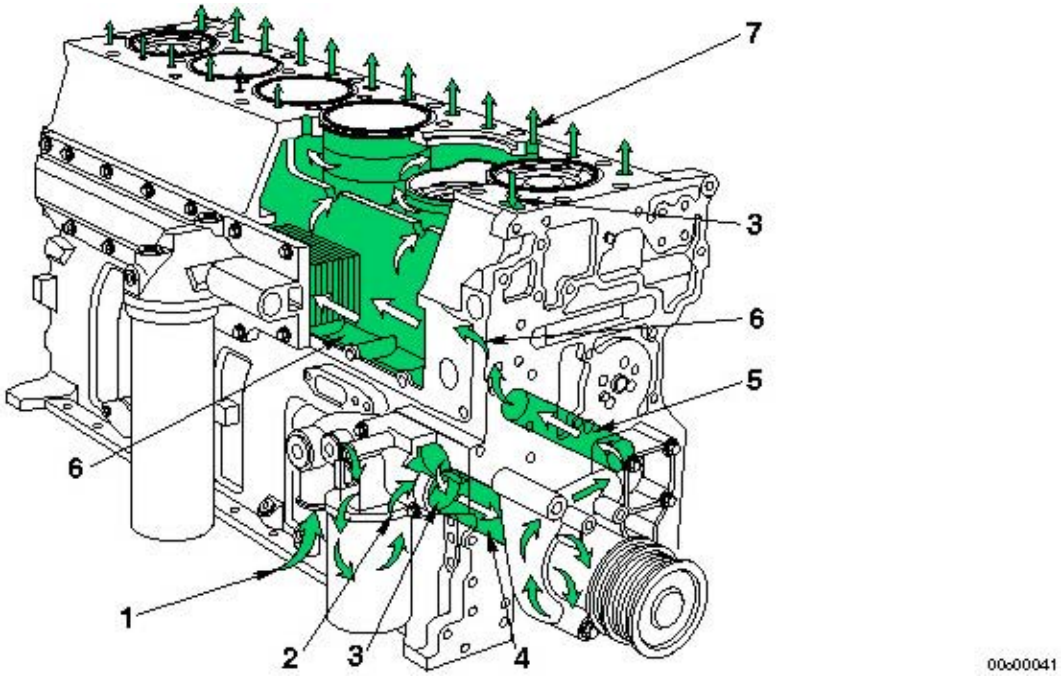

1. Coolant inlet
2. Coolant flow from coolant filter
3. Coolant bypass flow from thermostat
4. Coolant flow to water pump
5. Coolant flow from water pump
6. Coolant flow past oil cooler
7. Coolant flow to cylinder head.

Flow Diagram, Cooling System

Flow Diagram

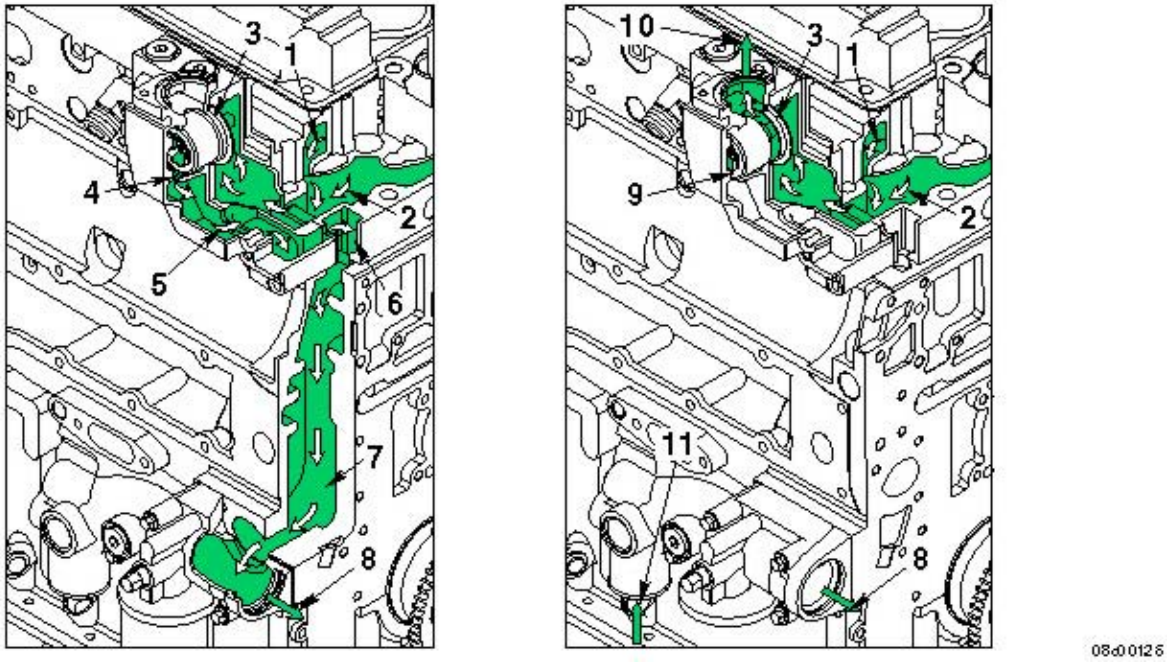

Single Thermostat

1. Coolant flow through cylinder head
2. Coolant flow from cylinder head to thermostat housing
3. Thermostat
4. Bypass open
5. Coolant flow through thermostat housing to bypass passage
6. Coolant bypass passage
7. Coolant bypass flow to water pump
8. Coolant flow to water pump
9. Bypass closed
10. Coolant flow to radiator
11. Coolant flow from radiator.

Flow Diagram, Cooling System

Flow Diagram

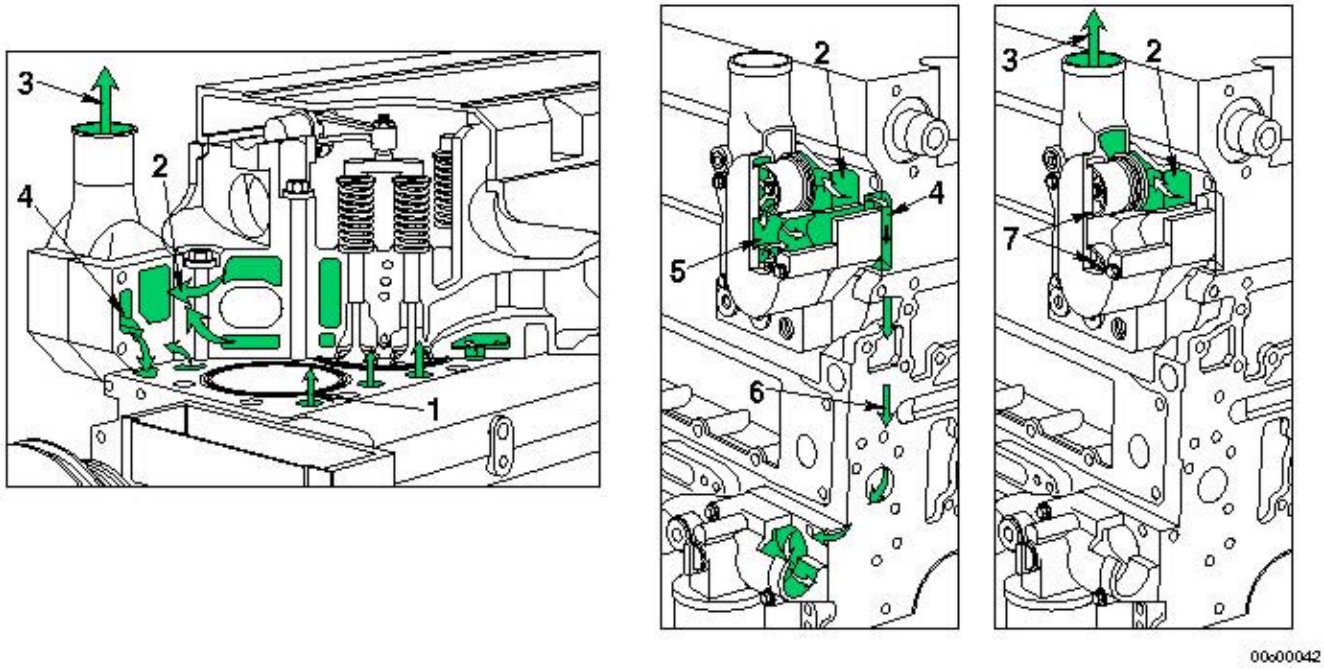

Dual Thermostat

1. Coolant flow from cylinder block to cylinder head
2. Coolant flow from cylinder head to thermostat housing
3. Coolant flow to radiator
4. Coolant bypass passage
5. Coolant bypass flow to water pump
6. Coolant bypass flow to water pump
7. Thermostats.

Flow Diagram, Air Intake System

Flow Diagram

Automotive, Industrial with CM570 and Power Generation without CM570

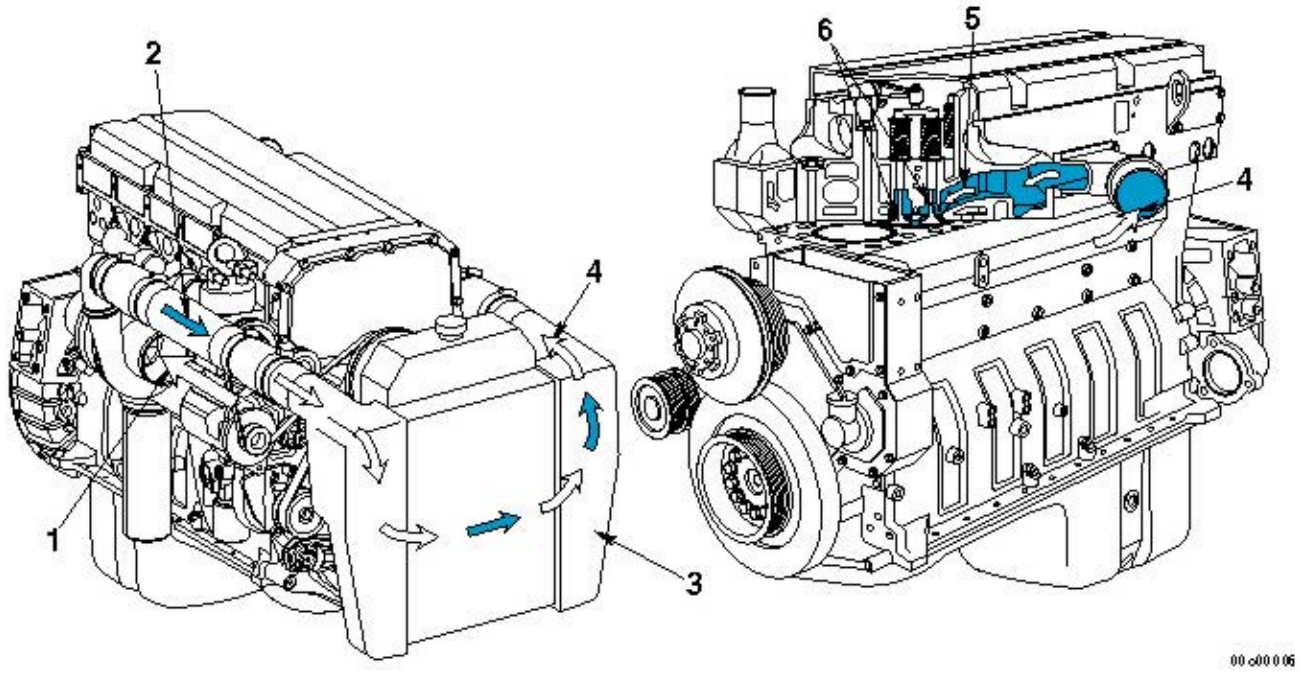

1. Intake air inlet to turbocharger
2. Turbocharger air to charge air cooler
3. Charge air cooler
4. From charge air cooler to intake manifold
5. Intake valve port
6. Intake valves.

With CM870

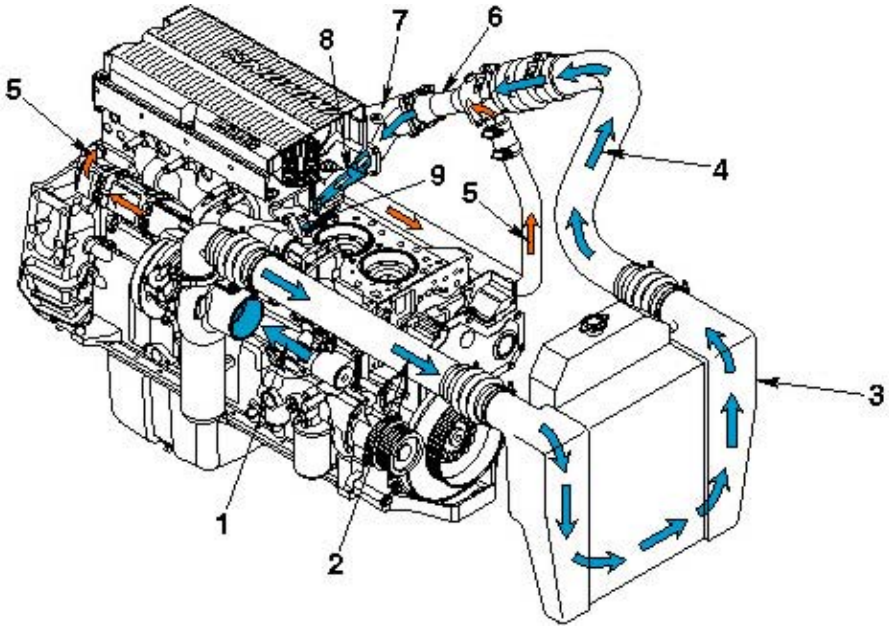

1. Intake air inlet to turbocharger
2. Turbocharger air to charge air cooler
3. Charge air cooler
4. From charge air cooler to intake manifold
5. Exhaust gas to EGR mixer
6. EGR mixer
7. Air intake connection
8. Intake valve port
9. Intake valves.

Flow Diagram, Exhaust System

Flow Diagram

Automotive, Industrial with CM570 and Power Generation without CM570

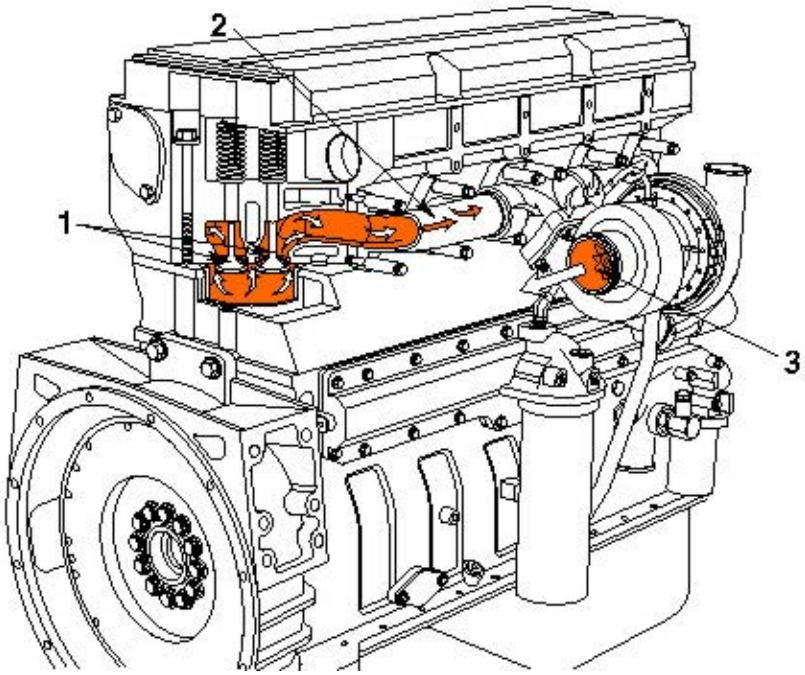

1. Exhaust valve ports
2. Exhaust manifold
3. Turbocharger turbine.

Flow Diagram, Exhaust System

Flow Diagram

Automotive, Industrial with CM570 and Power Generation without CM570

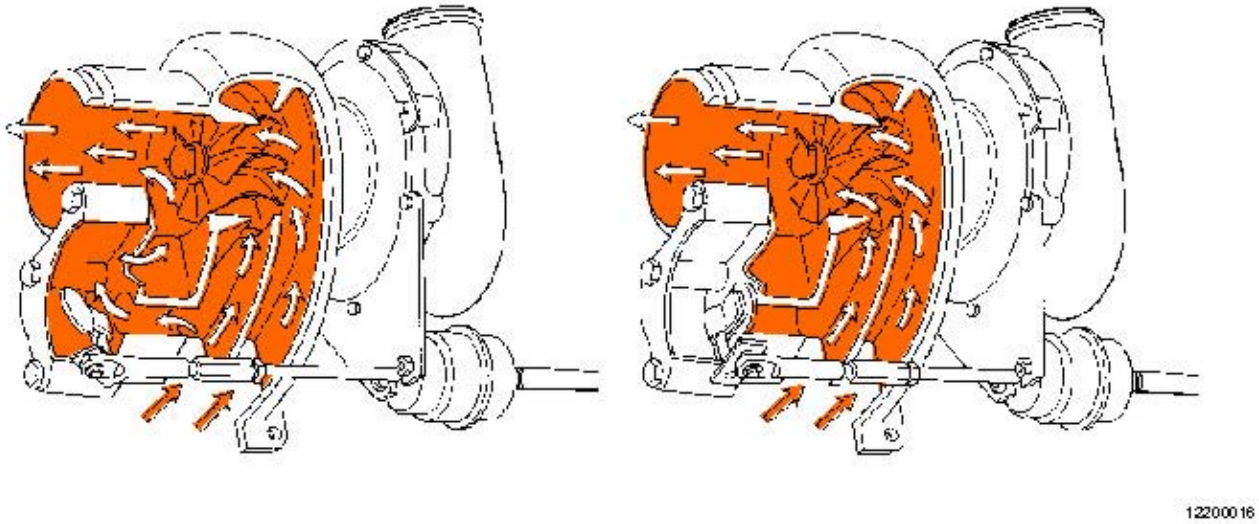

Wastegate OPEN; Wastegate CLOSED

With CM870

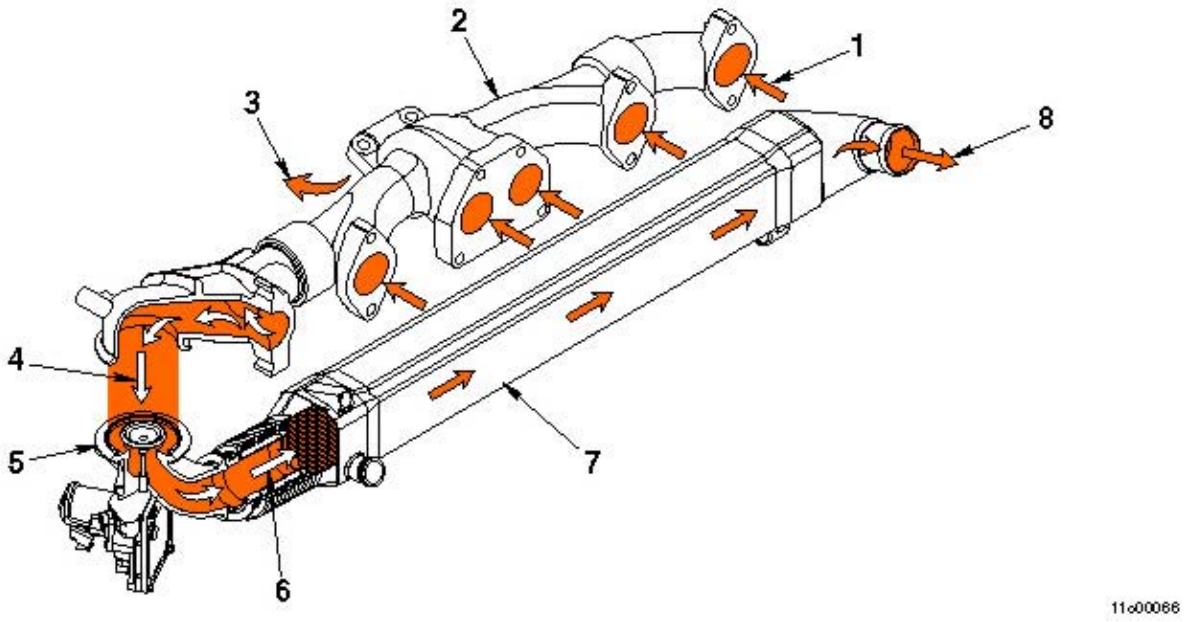

1. Exhaust gas to manifold
2. Exhaust manifold
3. Exhaust gas to turbocharger
4. Exhaust gas to EGR valve
5. EGR valve
6. Exhaust gas to EGR cooler connection
7. EGR cooler
8. Cooled exhaust gas to EGR connection tube and EGR mixer.

With CM870

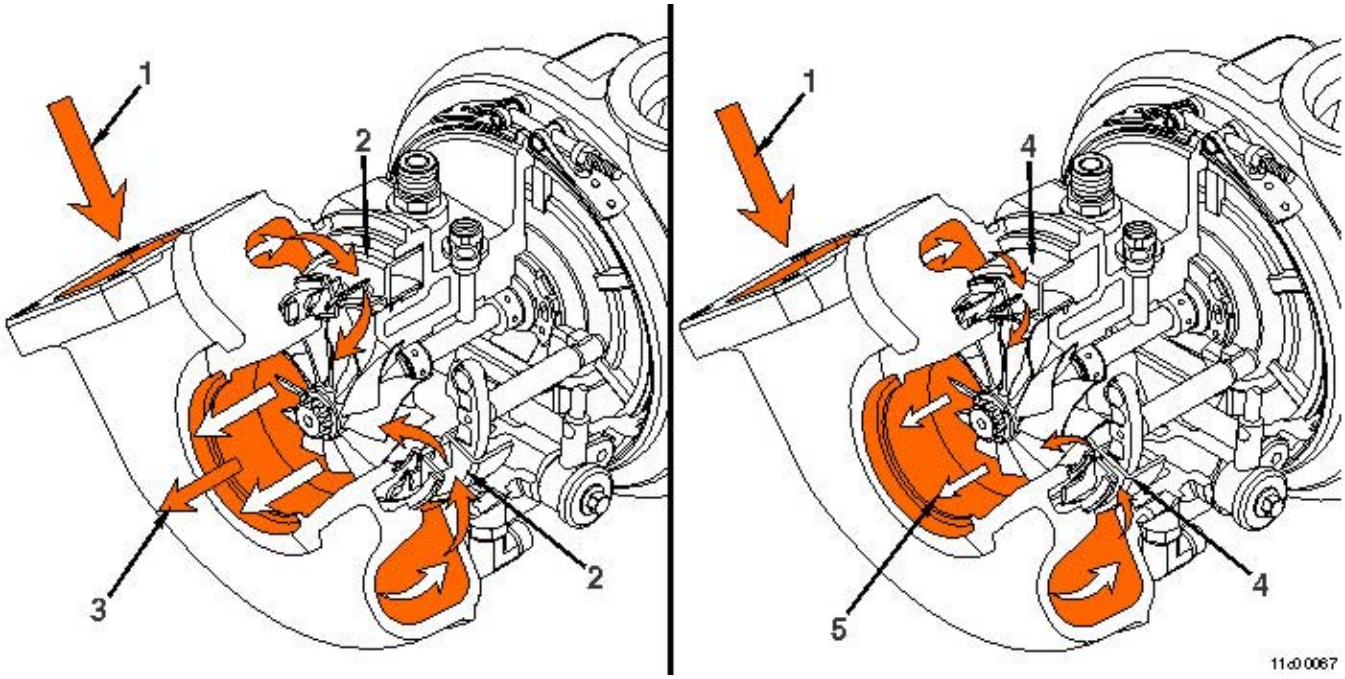

Variable Geometry

1. Exhaust in
2. Sliding nozzle Open
3. Exhaust gas low velocity flow
4. Sliding nozzle closed
5. Exhaust gas high velocity flow.

Automotive With CM871

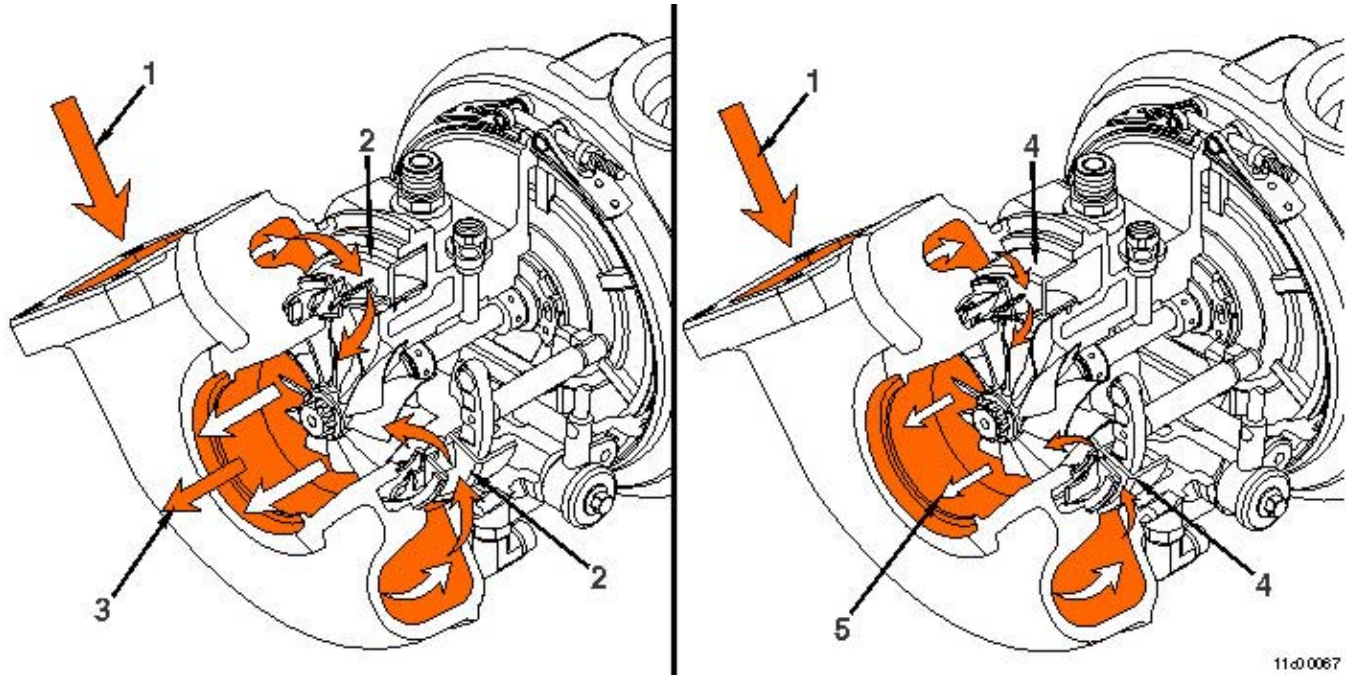

1. Exhaust gas in
2. Sliding nozzle - open position
3. Exhaust gas low velocity flow
4. Sliding nozzle - closed position
5. Exhaust gas high velocity flow.

Automotive With CM871

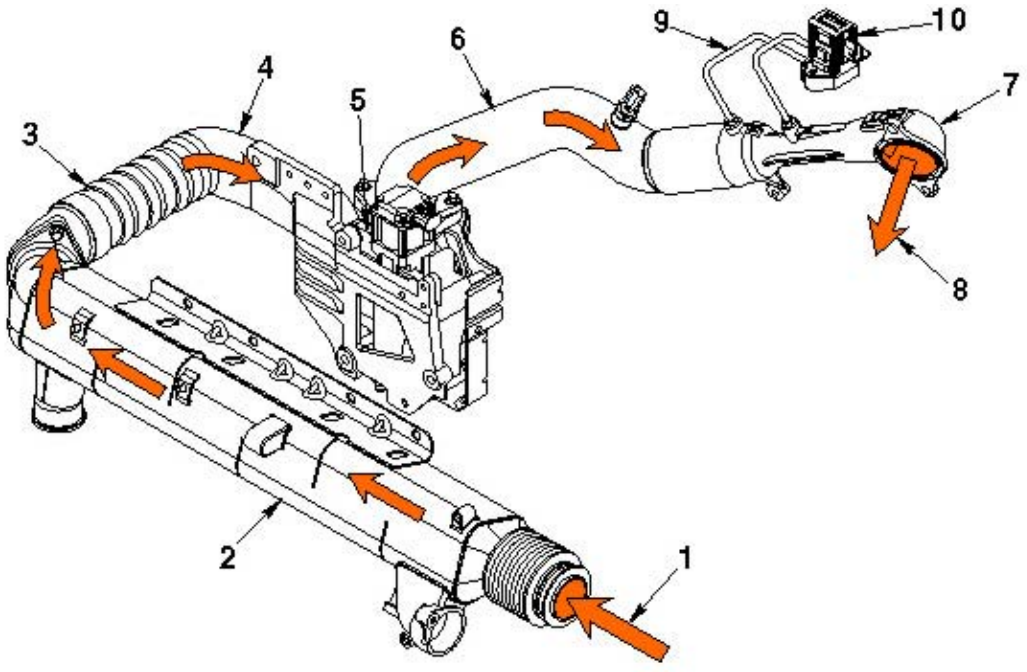

1. Exhaust gas to EGR cooler
2. EGR cooler
3. Cooled exhaust gas to rear EGR connection tube
4. EGR valve mounting bracket
5. EGR valve
6. Front EGR connection tube
7. EGR measurement venturi
8. Cooled exhaust gas to the EGR mixer
9. EGR differential pressure sensing tubes
10. EGR differential pressure sensor.

Automotive With CM871

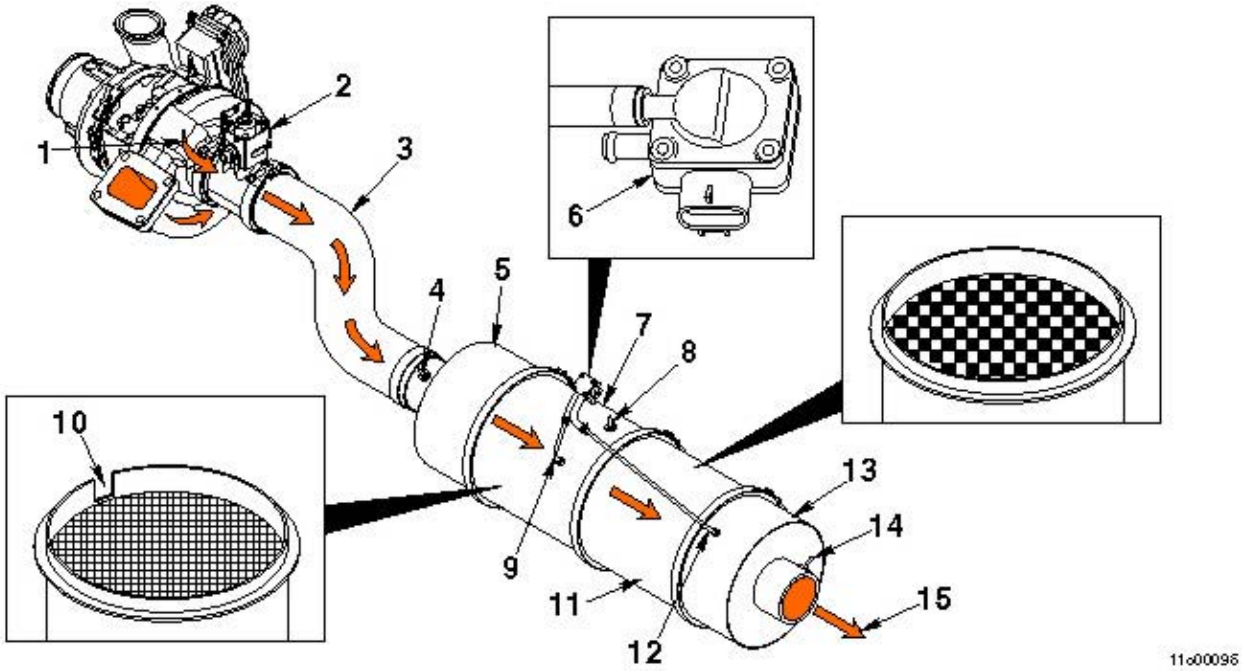

Cummins® Particulate Filter

1. Exhaust from turbocharger
2. Aftertreatment fuel injector
3. Exhaust pipe with exhaust mixture
4. Exhaust gas temperature sensor (number 1)
5. Aftertreatment inlet
6. Aftertreatment particulate trap differential pressure sensor
7. Aftertreatment catalyst
8. Exhaust gas temperature sensor (number 2)
9. Aftertreatment particulate trap differential pressure sensor tubes (High)
10. Installation alignment tab
11. Aftertreatment particulate trap
12. Aftertreatment particulate filter differential pressure sensor tube (Low)
13. Aftertreatment outlet
14. Exhaust gas temperature sensor (number 3)
15. Exhaust flow exiting aftertreatment system.

Flow Diagram, Compressed Air System

Flow Diagram

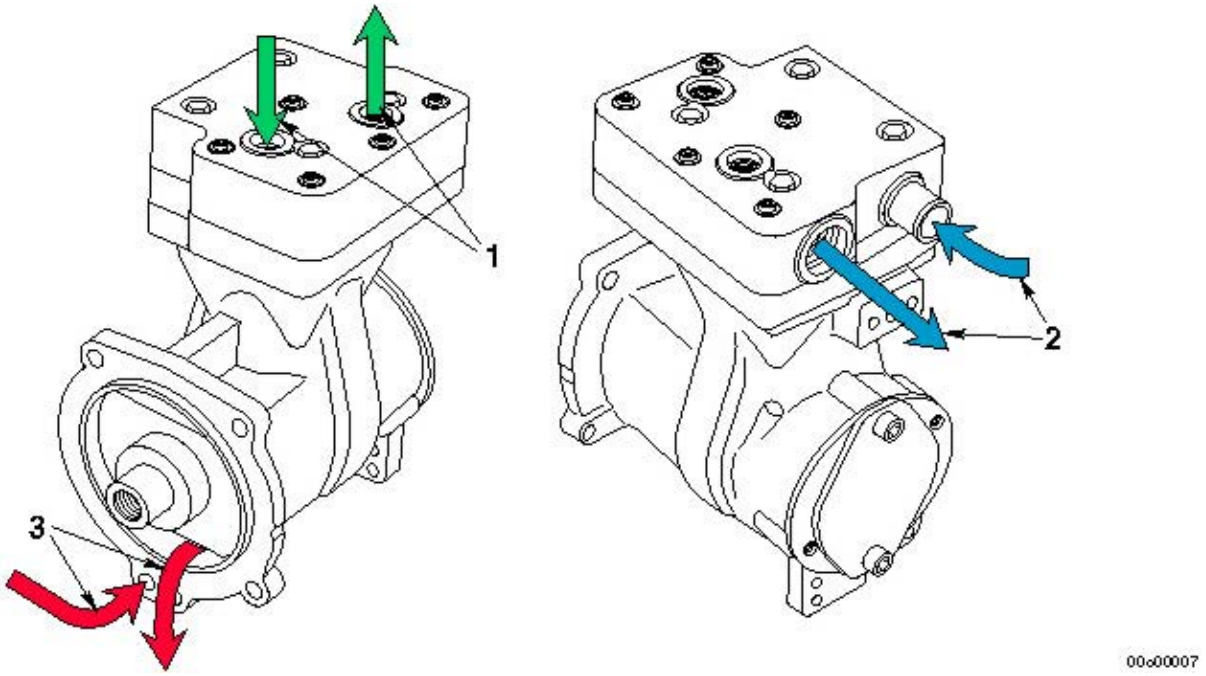

1. Coolant
2. Air
3. Lubricant.

Flow Diagram, Compressed Air System

Flow Diagram

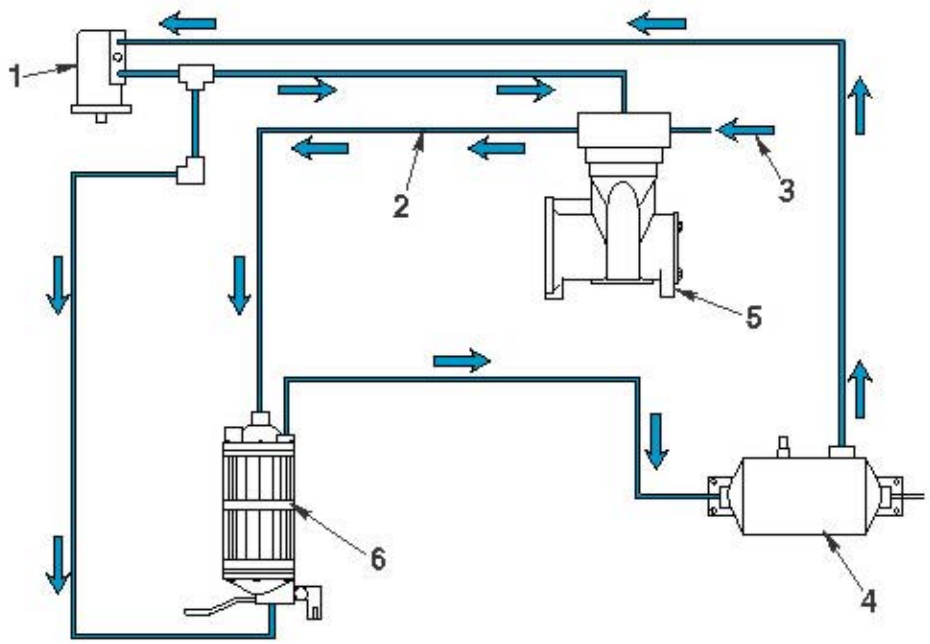

WABCO - Type System with Air Dryer

1. Governor
2. Discharge
3. Intake
4. Reservoir (wet tank)
5. Air compressor
6. Air dryer.

Notes

Section L - Service Literature

Section Contents

Page
Additional Service Literature L-1
General Information L-1
Cummins Customized Parts Catalog L-3
General Information L-3
Ordering the Customized Parts Catalog L-3
Ordering by Telephone L-3
Ordering On-Line L-3
Service Literature Ordering Location L-2
Contact Information L-2

This Page Left Intentionally Blank

Additional Service Literature

General Information

The following publications can be purchased:

Bulletin Number	Title of Publication
3379001	Fuel for Cummins Engines
3810340	Cummins Engine Oil Recommendations
3387251	Coolant Additives and Filtration
3387266	Cold Weather Operation
3666209	Cooling System Maintenance Extended Interval
3666239	Troubleshooting and Repair Manual, Signature, ISX, and QSX15 Engines
3666259	Troubleshooting and Repair Manual, Electronic Control System, Signature ISX, and QSX15 Engines
3666393	Troubleshooting and Repair Manual Generator-Drive Control System QSX15, QSK45, and QSK60 Engines
3666394	Troubleshooting and Repair Manual PowerCommand Control QSX15, QSK45, and QSK60 Generator Sets
3666414	QSX15 Industrial Wiring Diagram
3666349	QSX15 Generator Drive Wiring Diagram
3666466	QSX15 PowerCommand Control Wiring Diagram

Service Literature Ordering Location

Contact Information

Region	Ordering Location
United States and Canada	Cummins Distributors or Credit Cards at 1-800-646-5609 or Order online at www.powerstore.cummins.com
All Other Countries	Cummins Distributors or Dealers

Cummins Customized Parts Catalog

General Information

Cummins is pleased to announce the availability of a parts catalog compiled specifically for you. Unlike the generic versions of parts catalogs that support general high volume parts content; Cummins Customized catalogs contains only the new factory parts that were used to build your engine.

The catalog cover, as well as the content, is customized with you in mind. You can use it in your shop, at your worksite, or as a coffee table book in your RV or boat. The cover contains your name, company name, address, and telephone number. Your name and engine model identification even appears on the catalog spine. Everybody will know that Cummins created a catalog specifically for you.

This new catalog was designed to provide you with the exact information you need to order parts for your engine. This will be valuable for customers that do not have easy access to the Cummins Electronic Parts Catalog or the Cummins Parts Microfilm System.

Additional Features of the Customized Catalog include:

- Engine Configuration Data
- Table of Contents
- Separate Option and Parts Indexes
- Service Kits (when applicable)
- ReCon Part Numbers (when applicable)

Ordering the Customized Parts Catalog

Ordering by Telephone

North American customers can contact their Cummins Distributor or call Gannett Direct Marketing Services at 1-800-646-5609 and order by credit card. Outside North America order on-line or make an International call to Gannett at (+ +)502-454-6660.

Ordering On-Line

The Customized Parts Catalog can be ordered On-Line from the Cummins Powerstore by credit card. Contact the Powerstore at WWW.POWERSTORE.CUMMINS.COM

Contact GDMS or the CUMMINS POWERSTORE for the current price; Freight may be an additional expense.

Information we need to take your Customized Parts Catalog Order. This information drives the cover content of the CPC.

- Customer Name
- Street Address
- Company Name (optional)
- Telephone no.
- Credit Card No.
- Cummins Engine Serial Number (located on the engine data plate)
- Please identify the required media: Printed Catalog, CD-ROM, or PDF File

Unfortunately not all Cummins Engines can be supported by this parts catalog. Engines older than 1984 or newer than 3 months may not have the necessary parts information to compile a catalog. We will contact you if this occurs and explain why we are unable to fill your order.

Customized Parts Catalogs are produced specifically for a single customer. This means they are not returnable for a refund. If we make an error and your catalog is not useable, we will correct that error by sending you a new catalog.

Notes

Section M - Component Manufacturers

Section Contents

Page

Component Manufacturers' Addresses M-1
Air Compressors M-1
Air Cylinders M-1
Air Heaters M-1
Air Starting Motors M-1
Alternators M-1
Auxiliary Brakes M-1
Belts M-1
Catalytic Converters M-1
Coolant Level Switches M-1
Clutches M-1
Coolant Heaters M-2
Drive Plates M-2
Electric Starting Motors M-2
Electronic Switches M-2
Engine Protection Controls M-2
Fan Clutches M-2
Fans M-2
Fault Lamps M-2
Filters M-2
Flexplates M-2
Fuel Coolers M-2
Fuel Pumps M-2
Fuel Warmers M-2
Gauges M-3
Governors M-3
Heat Sleeves M-3
Hydraulic and Power Steering Pumps M-3
In-Line Connectors M-3
Oil Heaters M-3
Prelubrication Systems M-3
Radiators M-3
Throttle Assemblies M-3
Torque Converters M-3

This Page Left Intentionally Blank

Component Manufacturers' Addresses

NOTE: The following list contains addresses and telephone numbers of suppliers of accessories used on Cummins engines. Suppliers can be contacted directly for any specifications **not** covered in this manual.

Air Compressors

Bendix Heavy Vehicles Systems
Div. of Allied Automotive
901 Cleveland Street
Elyria, OH 44036
Telephone: (216) 329-9000

Holset Engineering Co., Inc.
1320 Kemper Meadow Drive
Suite 500
Cincinnati, OH 45240
Telephone: (513) 825-9600

Midland-Grau
Heavy Duty Systems
Heavy Duty Group Headquarters
10930 N. Pamona Avenue
Kansas City, MO 64153
Telephone: (816) 891-2470

Air Cylinders

Bendix Ltd.
Douglas Road
Kingswood
Bristol
England
Telephone: 0117-671881

Catching Engineering
1733 North 25th Avenue
Melrose Park, IL 60160
Telephone: (708) 344-2334

TEC - Hackett Inc.
8909 Rawles Avenue
Indianapolis, IN 46219
Telephone: (317) 895-3670

Air Heaters

Fleetguard, Inc.
1200 Fleetguard Road
Cookeville, TN 38502
Telephone: (615) 526-9551

Kim Hotstart Co.
P.O. Box 11245
Spokane, WA 99211-0245
Telephone: (509) 534-6171

Air Starting Motors

Ingersoll Rand
Chorley New Road
Horwich
Bolton
Lancashire
England
BL6 6JN
Telephone: 01204-65544

Ingersoll-Rand Engine
Starting Systems
888 Industrial Drive
Elmhurst, IL 60126
Telephone: (708) 530-3875

StartMaster
Air Starting Systems
A Division of Sycon Corporation
9595 Cheney Avenue
P. O. Box 491
Marion, OH 43302
Telephone: (614) 382-5771

Alternators

Robert Bosch Ltd.
P.O. Box 98
Broadwater Park
North Orbital Road
Denham
Uxbridge
Middlesex UD9 5HG
England
Telephone: (0)1895-838383

Prestolite Electrics
Cleveland Road
Leyland
PR5 1XB
England
Telephone: (0)1772-421663

C. E. Niehoff & Co.
2021 Lee Street
Evanston, IL 60202
Telephone: (708) 866-6030

Delco-Remy America
2401 Columbus Avenue
P.O. Box 2439
Anderson, IN 46018
Telephone: (317) 646-3528

Leece-Neville Corp.
400 Main Street
Arcade, NY 14009
Telephone: (716) 492-1700

Auxiliary Brakes

The Jacobs Manufacturing Company
Vehicle Equipment Division
22 East Dudley Town Road
Bloomfield, CT 06002
Telephone: (203) 243-1441

Belts

T.B.A. Belting Ltd.
P.O. Box 77
Wigan
Lancashire
WN2 4XQ
England
Telephone: (0)1942-259221

Dayco Mfg.
Belt Technical Center
1955 Enterprize
Rochester Hills, MI 48309
Telephone: (810) 853-8300

Gates Rubber Company
900 S. Broadway
Denver, CO 80217

Goodyear Tire and
Rubber Company
Industrial Products Div.
2601 Fortune Circle East
Indianapolis, IN 46241
Telephone: (317) 898-4170

Catalytic Converters

Donaldson Company, Inc.
1400 West 94th Street
P.O. Box 1299
Minneapolis, MN 55440
Telephone: (612) 887-3835

Nelson Division
Exhaust and Filtration Systems
1801 U.S. Highway 51 P.O. Box 428
Stoughton, WI 53589
Telephone: (608) 873-4200

Walker Manufacturing
3901 Willis Road
P.O. Box 157
Grass Lake, MI 49240
Telephone: (517) 522-5500

Coolant Level Switches

Robertshaw Controls Company
P.O. Box 400
Knoxville, TN 37901
Telephone: (216) 885-1773

Clutches

Twin Disc International S.A.
Chaussee de Namur
Nivelles
Belguim
Telephone: 067-224941

Twin Disc Incorporated
1328 Racine Street
Racine, WI 53403
Telephone: (414) 634-1981

Coolant Heaters

Fleetguard, Inc.
1200 Fleetguard Road
Cookeville, TN 38502
Telephone: (615) 526-9551

Drive Plates

Detroit Diesel Allison
Division of General Motors
Corporation
P.O. Box 894
Indianapolis, IN 46206-0894
Telephone: (317) 242-5000

Electric Starting Motors

Prestolite Electrics
Cleveland Road
Leyland
PR5 1XB
England
Telephone: 01772-421663

Delco-Remy America
2401 Columbus Avenue
P.O. Box 2439
Anderson, IN 46018
Telephone: (317) 646-3528

Leece-Neville Corp.
400 Main Street
Arcade, NY 14009
Telephone: (716) 492-1700

Nippondenso Inc.
2477 Denso Drive
P.O. Box 5133
Southfield, MI 48086
Telephone: (313) 350-7500

Electronic Switches

Cutler-Hammer Products
Eaton Corporation
4201 N. 27th Street
Milwaukee, WI 53216
Telephone: (414) 449-6600

Engine Protection Controls

Flight Systems Headquarters
Hempt Road
P.O. Box 25
Mechanicsburg, PA 17055
Telephone: (717) 697-0333

The Nason Company
2810 Blue Ridge Blvd.
West Union, SC 29696
Telephone: (803) 638-9521

Teddington Industrial
Equipment
Windmill Road
Sunbury on Thames
Middlesex
TW16 7HF
England
Telephone: (0)9327-85500

Fan Clutches

Kysor Cooling Systems N.A.
6040 West 62nd Street
Indianapolis, IN 46278
Telephone: (317) 328-3330

Holset Engineering Co. Ltd.
ST Andrews Road
Huddersfield, West Yorkshire
England HD1 6RA
Telephone: (0)1484-22244

Horton Industries, Inc.
P.O. Box 9455
Minneapolis, MN 55440
Telephone: (612) 378-6410

Rockford Clutch Company
1200 Windsor Road
P.O. Box 2908
Rockford, IL 61132-2908
Telephone: (815) 633-7460

Fans

Truflo Ltd.
Westwood Road
Birmingham
B6 7JF
England
Telephone: (0)121-3283041

Hayes-Albion Corporation
Jackson Manufacturing Plant
1999 Wildwood Avenue
Jackson, MI 49202
Telephone: (517) 782-9421

Engineered Cooling Systems, Inc.
201 W. Carmel Drive
Carmel, IN 46032
Telephone: (317) 846-3438

Brookside Corporation
P.O. Box 30
McCordsville, IN 46055
Telephone: (317) 335-2014

TCF Aerovent Company
9100 Purdue Rd., Suite 101
Indianapolis, IN 46268-1190
Telephone: (317) 872-0030

Kysor-Cadillac
1100 Wright Street
Cadillac, MI 49601
Telephone: (616) 775-4681

Schwitzer
6040 West 62nd Street
P.O. Box 80-B
Indianapolis, IN 46206
Telephone: (317) 328-3010

Fault Lamps

Cutler-Hammer Products
Eaton Corporation
4201 N. 27th Street
Milwaukee, WI 53216
Telephone: (414) 449-6600

Filters

Fleetguard International Corp.
Cavalry Hill Industrial Park
Weedon
Northampton NN7 4TD
England
Telephone: 01327-341313

Fleetguard, Inc.
1200 Fleetguard Road
Cookeville, TN 38502
Telephone: 1-800-22-Filters
(1-800-223-4583)

Flexplates

Corrugated Packing and
Sheet Metal
Hamsterley
Newcastle Upon Tyne
England
Telephone: (0)1207-560-505

Allison Transmission
Division of General Motors
Corporation
P.O. Box 894
Indianapolis, IN 46206-0894
Telephone: (317) 242-5000

Midwest Mfg. Co.
29500 Southfield Road, Suite 122
Southfield, MI 48076
Telephone: (313) 642-5355

Wohlert Corporation
708 East Grand River Avenue
P.O. Box 20217
Lansing, MI 48901
Telephone: (517) 485-3750

Fuel Coolers

Hayden, Inc.
1531 Pomona Road
P.O. Box 848
Corona, CA 91718-0848
Telephone: (909) 736-2665

Fuel Pumps

Robert Bosch Corp.
Automotive Group
2800 South 25th Ave.
Broadview, IL 60153

Fuel Warmers

Fleetguard, Inc.
1200 Fleetguard Road
Cookeville, TN 38502
Telephone: (615) 526-9551

Gauges

Grasslin U.K. Ltd.
Vale Rise
Tonbridge
Kent
TN9 1TB
England
Telephone: (0)1732-359888

Datcon Instruments
P.O. Box 128
East Petersburg, PA 17520
Telephone: (717) 569-5713

Rochester Gauges, Inc.
11616 Harry Hines Blvd.
P.O. Box 29242
Dallas, TX 75229
Telephone: (214) 241-2161

Governors

Woodward Governor Co.
P.O. Box 1519
Fort Collins, CO 80522
Telephone: (303) 482-5811
(800) 523-2831

Barber Colman Co.
1354 Clifford Avenue
Loves Park, IL 61132
Telephone: (815) 637-3000

United Technologies
Diesel Systems
1000 Jorie Blvd.
Suite 111
Oak Brook, IL 69521
Telephone: (312) 325-2020

Heat Sleeves

Bentley Harris Manufacturing Co.
100 Bentley Harris Way
Gordonville, TN 38563
Telephone: (313) 348-5779

Hydraulic and Power Steering Pumps

Honeywell Control Systems Ltd.
Honeywell House
Arlington Business Place
Bracknell
Berks RG12 1EB
Telephone: (0)1344-656000

Sperry Vickers
P.O. Box 302
Troy, MI 48084
Telephone: (313) 280-3000

Z.F.
P.O. Box 1340
Grafvonsoden Strasse
5-9 D7070
Schwaebisch Gmuend
Germany
Telephone: 7070-7171-31510

In-Line Connectors

Pioneer-Standard Electronics, Inc.
5440 Neiman Parkway
Solon, OH 44139
Telephone: (216) 349-1300

Deutsch
Industrial Products Division
37140 Industrial Avenue
Hemet, CA 92343
Telephone: (714) 929-1200

Oil Heaters

Fleetguard, Inc.
1200 Fleetguard Road
Cookeville, TN 38502
Telephone: (615) 526-9551

Kim Hotstart Co.
P.O. Box 11245
Spokane, WA 99211-0245
Telephone: (509) 534-6171

Prelubrication Systems

RPM Industries, Inc.
Suite 109
55 Hickory Street
Washington, PA 15301
Telephone: (412) 228-5130

Radiators

JB Radiator Specialties, Inc.
P.O. Box 292087
Sacramento, CA 95829-2087
Telephone: (916) 381-4791

The G&O Manufacturing Company
100 Gando Drive
P.O. Box 1204
New Haven, CT 06505-1204
Telephone: (203) 562-5121

Young Radiator Company
2825 Four Mile Road
Racine, WI 53404
Telephone: (910) 271-2397

L and M Radiator, Inc.
1414 East 37th Street
Hibbing, MN 55746
Telephone: (218) 263-8993

Throttle Assemblies

Williams Controls, Inc.
14100 SW 72nd Avenue
Portland, OR 97224
Telephone: (503) 684-8600

Torque Converters

Twin Disc International S.A.
Chaussee de Namur
Nivelles
Belgium
Telephone: 067-224941

Twin Disc Incorporated
1328 Racine Street
Racine, WI 53403-1758
Telephone: (414) 634-1981

Rockford Powertrain, Inc.
Off-Highway Systems
1200 Windsor Road
P.O. Box 2908
Rockford, IL 61132-2908
Telephone: (815) 633-7460

Modine Mfg. Co.
1500 DeKoven Avenue
Racine, WI 53401
Telephone: (414) 636-1640

Notes

Section S - Service Assistance

Section Contents

Page
Distributors - International S-31
Locations S-31
Distributors and Branches S-4
Australia S-22
Canada S-19
New Zealand S-26
United States S-4
Division and Regional Offices S-2
Locations S-2
Emergency and Technical Service S-1
General Information S-1
Problem Solving S-1
General Information S-1
Regional Offices - International S-27
Locations S-27
Routine Service and Parts S-1
General Information S-1

This Page Left Intentionally Blank

Routine Service and Parts

General Information

Personnel at Cummins Authorized Repair Locations can assist you with the correct operation and service of your engine. Cummins has a worldwide service network of more than 5,000 Distributors and Dealers who have been trained to provide sound advice, expert service, and complete parts support. Check the telephone directory yellow pages or refer to the directory in this section for the nearest Cummins Authorized Repair Location.

Emergency and Technical Service

General Information

The Cummins Customer Assistance Center provides a 24-hour, toll free telephone number to aid in technical and emergency service when a Cummins Authorized Repair Location can **not** be reached or is unable to resolve an issue with a Cummins product.

If additional assistance is required, call Toll-Free:

1-800-DIESELS
(1-800-343-7357)

- Includes all 50 states, Bermuda, Puerto Rico, Virgin Islands, and the Bahamas.
- Outside of North America contact your Regional Office. Telephone numbers and addresses are listed in the International Directory.



Problem Solving

General Information

Normally, any problem that arises with the sale, service, or repair of your engine can be handled by a Cummins Authorized Repair Location in your area. Refer to the telephone directory yellow pages for the one nearest you. If the problem has **not** been handled satisfactorily, follow the steps outlined below:

1. If the disagreement is with a Dealer, talk to the Cummins Distributor with whom he has his service agreement.
2. If the disagreement is with a Distributor, call the nearest Cummins Division or Regional Office; however, most problems are solved below the Division or Regional office level. Telephone numbers and addresses are listed in this section. Before calling, write down the following information:

a. Engine model and serial number
b. Type and make of equipment
c. Total kilometers [miles] or hours of operation
d. Warranty start date
e. Nature of problem
f. Summary of the current problem arranged in the order of occurrence
g. Name and location of the Cummins Distributor or Dealer

12. If a problem can **not** be resolved satisfactorily through your Cummins Authorized Repair Location or Division Office, write to:

Cummins Customer Assistance Center - 41403, Cummins Inc., Box 3005, Columbus, IN 47202-3005

Division and Regional Offices - Locations

Australia Regional Office	**Cummins Engine Company Pty. Ltd.**	2 Caribbean Drive Scoresby, Victoria 3179 Australia Telephone: (61-3) 9765-3222 FAX: (61-3) 9763-0079 **NOTE:** This office also serves New Zealand.
Cummins Americas Regional Office	**Cummins Americas Inc.**	3350 SW 148 Avenue Suite 205 Miramar, FL 33027 Telephone: [1-954] 431-5511 Fax: [1-954] 433-5797 **NOTE:** This office serves Puerto Rico and South America excluding Brazil.
China Beijing	**Cummins (China) Investment Co. Ltd**	28F, Tower A, GATEWAY, No.18, Xiaguangli North Road, East Third Ring, Chaoyang District Beijing, Beijing ZIP / Postal Code: 100027 China Telephone: [86-10] 84548888 Telefax: [86-10] 67876347
Brazil	**Cummins Brasil Ltda.**	Rua Jati, 266 07180-900 Guarulhos Sao Paulo Brazil Phone: [55-11] 6465-9811 Fax: [55-11] 6412-1483
Daventry	**Cummins Engine Company Ltd (Africa)**	Royal Oak Way South Daventry, Northants ZIP / Postal Code: NN11 5NU United Kingdom Telephone: [44-1327] 886000 Telefax: [44-1327] 886106
Daventry	**Cummins Engine Co. Ltd (Serving Czech Republic)**	Royal Oak Way South Daventry, Northants ZIP / Postal Code: NN11 5NU United Kingdom Telephone: [44-1327] 886000 Telefax: [44-1327] 886106
Daventry	**Cummins Engine Company Ltd (Middle East)**	Royal Oak Way South Daventry, Northants ZIP / Postal Code: NN11 5NU United Kingdom Telephone: [44-1327] 886000 Telefax: [44-1327] 886106
Dubai United Arab Emirates	**Cummins Middle East FZE**	Units ZF 5/6 Jebel Ali Free Zone P.O.Box No 17636 Dubai United Arab Emirates Phone: [971-4] 883 8998 Fax: [971-4] 883 7971

India **Pune**	**Cummins India Ltd.**	Kothrud Pune, Maharashtra ZIP / Postal Code: 411029 India Telephone: [91-20] 2538-5435 / 0240 / 1105 Telefax: [91-20] 2538-0125
Korea **Seoul**	**Cummins Korea Ltd.**	25th floor, ASEM tower, 159-1, Samsung-Dong Kangnam-ku, Seoul ZIP / Postal Code: 135-798 South Korea Telephone: [82-2] 3420-0901 Telefax: [82-2] 3452-4113 / 539-6569
SLP Mexico	**Cummins, S. de R.L. de C.V.**	Arquimedes No. 209 Col. Polanco Mexico, Distrito Federal ZIP / Postal Code: 11560 Mexico Telephone: [52-5] 254-3822 / 3783 / 3622 Telefax: [52-5] 254-3645
Russia **Moscow**	**Cummins Engine Company, Inc.**	Park Place Office E708, 113/1 Leninskiy Prospect Moscow ZIP / Postal Code: 117198 Russia Telephone: [7-495] 956-51-22 / 23 Telefax: [7-495] 956-53-62
Singapore	**Cummins Diesel Sales Corporation**	8 Tanjong Penjuru Singapore ZIP / Postal Code: 609019 Singapore Telephone: [65] 6265-0155

Distributors and Branches - United States

Alabama	**Birmingham**	Cummins Mid-South, LLC 2200 Pinson Highway P.O. Box 1147 Birmingham, AL 35217 Telephone: (205) 841-0421 FAX: (205) 849-5926
Alabama	**Mobile**	Cummins Mid-South, LLC 1924 N. Beltline Hwy. Mobile, AL 36617 Telephone: (334) 456-2236 FAX: (334) 452-6419
Alaska	**Anchorage**	Cummins Northwest, Inc. 2618 Commercial Drive Anchorage, AK 99501-3095 Telephone: (907) 279-7594 FAX: (907) 276-6340
Arizona	**Phoenix**	Cummins Rocky Mountain, LLC 2239 N. Black Canyon Hgwy Phoenix, AZ 85009 Telephone: (602) 252-8021 FAX: (602) 253-6725
Arkansas	**Little Rock**	Cummins Mid-South, Inc. 6600 Interstate 30 Little Rock, AR 72209 Telephone: Sales: (501) 569-5600 Service: (501) 569-5656 Parts: (501) 569-5613 FAX: (501) 565-2199
California	**San Leandro**	Cummins West, Inc. 14775 Wicks Blvd. San Leandro, CA 94577-6779 Telephone: (510) 351-6101 FAX: (510) 352-3925
California	**Arcata**	Cummins West, Inc. 4751 West End Road Arcata, CA 95521 Telephone: (707) 822-7392 FAX: (707) 822-7585
California	**Bakersfield**	Cummins West, Inc. 4601 East Brundage Lane Bakersfield, CA 93307 Telephone: (805) 325-9404 FAX: (805) 861-8719
California	**Fresno**	Cummins West, Inc. 5333 N Cornelia Ave Fresno, CA 93722 Telephone: (559) 277-6760 FAX: (559) 277-6769

California	**Redding**	Cummins West, Inc. 20247 Charlanne Drive Redding, CA 96002 Telephone: (530) 222-4070 FAX: (530) 224-4075
California	**Stockton**	Cummins West, Inc. 5250 Claremont Ave Suite 204 Stockton, California 95207, USA Telephone: (209) 472-3460 FAX: (209) 472-3450
California	**West Sacramento**	Cummins West, Inc. 875 Riverside Parkway West Sacramento, CA 95605-1502 Telephone: (916) 371-0630 FAX: (916) 371-2849
California	**Los Angeles**	Cummins Cal Pacific Inc. 1939 Deere Avenue (Irvine) Irvine, CA 92606 Telephone: (949) 253-6000 FAX: (949) 253-6070
California	**Montebello**	Cummins Cal Pacific Inc. 1105 South Greenwood Avenue Montebello, CA 90640 Telephone: (323) 728-8111 FAX: (323) 889-7499
California	**Bloomington**	Cummins Cal Pacific Inc. 3061 S. Riverside Avenue Bloomington, CA 92316 Telephone: (909) 877-0433 FAX: (909) 877-3787
California	**San Diego**	Cummins Cal Pacific Inc. 310 N. Johnson Avenue El Cajon, CA 92020 Telephone: (619) 593-3093 FAX: (619) 593-0600
California	**Ventura**	Cummins Cal-Pacific Inc. 3958 Transport St. Ventura, CA 93003 Telephone: (805) 644-7281 FAX: (805) 644-7284
Colorado	**Denver**	Cummins Rocky Mountain, Inc. 8211 East 96th Ave Henderson, Colorado 80640 Telephone: (303) 287-0201 FAX: (303) 288-7080
Colorado	**Grand Junction**	Cummins Rocky Mountain, Inc. 2380 U.S. Highway 6 & 50 P.O. Box 339 Grand Junction, CO 81501 Telephone: (970) 242-5776 FAX: (970) 243-5494

Connecticut	**Rocky Hill**	Cummins Metropower, Inc. 914 Cromwell Ave. Rocky Hill, CT 06067 Telephone: (860) 529-7474 FAX: (860) 529-7524
Florida	**Ft. Myers**	Cummins Power South, LLC 2671 Edison Avenue Ft. Myers, FL 33916 Telephone: (941) 337-1211 FAX: (941) 337-5374
Florida	**Jacksonville**	Cummins Power South 755 Pickettville Rd. Jacksonville, FL 32220 Telephone: (904) 378-1902 FAX: (904) 378-1904
Florida	**Hialeah (Miami)**	Cummins Power South, LLC 9900 N.W. 77th Avenue Hialeah Gardens, FL 33016 Telephone: (305) 821-4200 FAX: (305) 557-2992
Florida	**Ocala**	Cummins Power South, LLC 321 Southwest 52nd Ave. Ocala, FL 34474-1892 Telephone: (352) 861-1122 FAX: (352) 861-1130
Florida	**Orlando**	Cummins Power South, LLC 4020 North Orange Blossom Trail Orlando, FL 32810 Telephone: (407) 298-2080 FAX: (407) 290-8727
Florida	**Tampa**	Cummins Power South, LLC 5421 N. 59th Street Tampa, FL 33610 Telephone: (813) 621-7202 FAX: (813) 621-8250
Florida		Cummins Power South, LLC 5906 Breckenridge Parkway Suite J Tampa, FL 33610 Telephone: (813) 664-5868 FAX: (813) 623-5442
Florida		Cummins Power South, LLC 5912 E. Hillsborough Avenue Tampa, FL 33610 Telephone: (813) 626-1101 FAX: (813) 628-8888
Florida		Cummins Power South, LLC 6606 N. 56th Street Tampa, FL 33610 Telephone: (813) 623-3330 FAX: (813) 628-4162

Georgia	**Atlanta**	Cummins South, Inc. 100 University Ave. S.W. Atlanta, Georgia 30315-2202 Telephone: (404) 527-7800 FAX: (404) 527-7832
Georgia		Cummins South, Inc. 5125 Georgia Highway 85 College Park, GA 30349 Telephone: (404) 763-0151 FAX: (404) 766-2132
Georgia	**Albany**	Cummins South, Inc. 1915 W. Oakridge Drive Albany, GA 31707-4938 Telephone: (912) 888-6210 FAX: (912) 883-1670
Georgia	**Augusta**	Cummins South, Inc. 1255 New Savannah Road Augusta, GA 30901-3891 Telephone: (706) 722-8825 FAX: (706) 722-7553
Georgia	**Savannah**	Cummins South, Inc. 8 Interchange Court Savannah, GA 31401-1627 Telephone: (912) 232-5565 FAX: (912) 232-5145
Hawaii	**Kapolei**	Cummins West Inc. 91-230 Kalaeloa Blvd. Kapolei, HI 96707 Telephone: (808) 682-8110 FAX: (808) 682-8477
Idaho	**Boise**	Cummins Rocky Mountain, LLC 8949 So. Federal Way City Boise, Idaho 84716 Telephone: (208) 336-5000 FAX: (208) 338-5436
Illinois	**Chicago**	Cummins Power, LLC 7145 Santa Fe Drive Hodgkins, IL 60525 Telephone: (708) 579-9222 FAX: (708) 352-7547
Illinois	**Bloomington**	Cummins Mid-States Power, Inc. (at U.S. 51 N and I-55) 414 W. Northtown Road Bloomington-Normal, IL 61761 Telephone: (309) 452-4454 FAX: (309) 452-1642
Illinois	**Onan Branch**	Cummins/Onan Northern Illinois 8745 W. 82nd Place Justin, IL 60458 Telephone: (708) 563-7070 FAX: (708) 563-7095

Illinois	**Madison**	Cummins MId-South, LLC 222 SR-203 Madison, Illinois 62060 Telephone: (618) 798-9512 FAX: (618) 798-9521
Illinois	**Rock Island**	Cummins Central Power, LLC 7820 - 42nd Street West Rock Island, IL 61201 Telephone: (309) 787-4300 FAX: (309) 787-4397
Indiana	**Indianapolis**	Cummins Mid-States Power, Inc. P.O. Box 42917 3762 West Morris Street Indianapolis, IN 46242-0917 Telephone: (317) 243-7979 FAX: (317) 240-1925
Indiana		Cummins Mid-States Power, Inc. P.O. Box 42917 3661 West Morris St Indianapolis, IN 46241 Telephone: (317) 486-5287 FAX: (317) 486-5281
Indiana		Cummins Mid-States Power, Inc. 4301 W. Morris St. 3762 West Morris Street Indianapolis, IN 46241 Telephone: (317) 240-1967 FAX: (317) 240-1975
Indiana	**Evansville**	Cummins Cumberland, Inc. 7901 Highway 41 North Evansville, IN 47725 Telephone: (812) 867-4400 FAX: (812) 867-4411
Indiana	**Ft. Wayne**	Cummins Mid-States Power, Inc. 3415 Coliseum Blvd. West (At Jct. I-69 & 30/33) Ft. Wayne, IN 46808 Telephone: (219) 482-3691 FAX: (219) 484-8930
Indiana	**Gary**	Cummins Northern Illinois, Inc. 1440 Texas Street Gary, IN 46402 Telephone: (219) 885-5591 FAX: (219) 883-4817
Indiana	**Indianapolis**	Cummins Mid-States Power, Inc. 3661 West Morris St Indianapolis, IN 46241 Telephone: (317) 486-5287 FAX: (317) 486-5281
Iowa	**Cedar Rapids**	Cummins Central Power, LLC 625 - 33rd Avenue SW Cedar Rapids, IA 52404 Telephone: (319) 366-7537 (24 hours) FAX: (319) 366-7562

Iowa	**Des Moines**	Cummins Central Power, LLC 1680 N.E. 51st Avenue Des Moines, IA 50313 Telephone: (515) 262-9591 Parts: (515) 262-9744 FAX: (515) 262-0626
Kansas	**Colby**	Cummins Central Power, LLC 1880 South Range Colby, KS 67701 Telephone: (785) 462-3945 FAX: (785) 462-3970
Kansas	**Garden City**	Cummins Central Power, LLC 1285 Acraway Garden City, KS 67846 Telephone: (316) 275-2277 FAX: (316) 275-2533
Kansas	**Wichita**	Cummins Central Power, LLC 5101 North Broadway Wichita, KS 67219 Telephone: (316) 838-0875 FAX: (316) 838-0704
Kentucky	**Louisville**	Cummins Cumberland, Inc. (Corporate Office) 2301 Nelsonville Parkway Louisville, KY 40223 Telephone: (502) 254-7375 FAX: (502) 254-1215
Kentucky	**Hazard**	Cummins Cumberland, Inc. Highway 15 South Hazard, KY 41701 Telephone: (606) 436-5718 FAX: (606) 436-5038
Kentucky	**Louisville**	Cummins Cumberland, Inc. 9820 Bluegrass Parkway Louisville, KY 40299 Telephone: (502) 491-4263 FAX: (502) 499-0896
Louisiana	**Morgan City**	Cummins Mid-South, LLC 9508 Highway 90 E Amelia, LA 70340 Telephone: (504) 631-0576 FAX: (504) 631-0081
Louisiana	**New Orleans**	Cummins Mid-South, LLC 110 E. Airline Highway Kenner, LA 70062 Telephone: (504) 465-3412 FAX: (504) 465-3408
Maine	**Scarborough**	Cummins Northeast, Inc. 10 Gibson Road Scarborough, ME 04074 Telephone: (207) 883-8155 FAX: (207) 883-5526

Maryland	**Baltimore**	Cummins Power Systems, Inc. 1907 Park 100 Drive MD 21061 Telephone: (410) 590-8700 FAX: (410) 590-8731
Massachusetts	**Boston**	Cummins Northeast, Inc. 100 Allied Drive Dedham, MA 02026 Telephone: (781) 329-1750 FAX: (781) 329-4428
Massachusetts	**Springfield**	Cummins Northeast, Inc. 177 Rocus Street Springfield, MA 01104 Telephone: (413) 737-2659 FAX: (413) 731-1082
Michigan	**Detroit (New Hudson)**	Standby Power, Div. of Cummins Bridgeway, LLC 21810 Clessie Ct New Hudson, Michigan 48165 Telephone: (248) 573-1600
Michigan		Cummins Bridgeway, LLC 54240 Grand River Ave New Hudson, Michigan 48165 Telephone: (517) 573-1900
Michigan	**Grand Rapids**	Cummins Bridgeway, LLC 3715 Clay Avenue, S.W. Grand Rapids, MI 49508 Telephone: (616) 538-2250 FAX: (616) 538-3830
Michigan	**Grand Rapids**	Standby Power, Inc. 7580 Expressway Drive S.W. Grand Rapids, MI 49548 Telephone: (616) 281-2211 FAX: (616) 281-3177
Michigan	**Iron Mountain**	Cummins NPower, LLC 1901 Stevenson Avenue Iron Mountain, MI 49801 Telephone: (906) 774-2424 FAX: (906) 774-1190
Michigan	**Saginaw**	Cummins Bridgeway, LLC 722 N. Outer Drive Saginaw, MI 48605 Telephone: (989) 752-5200 FAX:(989) 752-4194
Minnesota	**St. Paul**	Cummins NPower, LLC 3030 Centre Pointe Drive Suite 500 Roseville, MN 55113 Telephone: (651) 636-1000 FAX: (651) 638-2442
Minnesota	**Duluth**	Cummins NPower, LLC 3115 Truck Center Drive Duluth, MN 55806-1786 Telephone: (218) 628-3641 FAX: (218) 628-0488

Mississippi	**Jackson**	Cummins Mid-South, LLC 325 New Highway 49 South Jackson, MS 39288-4224 Telephone: (601) 939-7016 FAX: (601) 932-7399
Missouri	**Kansas City**	Cummins Central Power, LLC 8201 NE Parvin Road Kansas City, MO 64161 Telephone: (816) 414-8200 FAX: (816) 414-8299
Missouri	**Joplin**	Cummins Central Power, LLC 3507 East 20th Street Joplin, MO 64801 Telephone: (417) 623-1661 FAX: (417) 623-1817
Missouri	**Springfield**	Cummins Central Power, LLC 3637 East Kearney Springfield, MO 65803 Telephone: (417) 862-0777 FAX: (417) 862-4429
Missouri	**Columbia**	Cummins Mid-South, LLC 5221 Highway 763 North Columbia, MO 65205 Telephone: (314) 449-3711 FAX: (314) 449-3712
Missouri	**Sikeston**	Cummins Mid-South, LLC 101 Keystone Drive Sikeston, MO 63801 Telephone: (573) 472-0303 FAX: (573) 472-0306
Missouri	**Industrial Power Branch**	Cummins Mid-South, LLC 3256 E. Outer Road Scott City, MO 63780 Telephone: (573) 335-7399 FAX: (573) 335-7062
Montana	**Billings**	Cummins Rocky Mountain, LLC 5151 Midland Road Billings, MT 59101 Telephone: (406) 245-4194 FAX: (406) 245-7923 Toll Free #: (800) 332-7788
Montana	**Missoula**	Cummins Northwest, Inc. 4950 North Reserve Street Missoula, MT 59802-1498 Telephone: (406) 728-1300 FAX: (406) 728-8523
Nebraska	**Omaha**	Cummins Great Plains Diesel, Inc. 5515 Center Street Omaha, NE 68106 Telephone: (402) 551-7678 (24 Hours) FAX: (402) 551-1952

Nebraska	**Kearney**	Cummins Central Power, LLC 515 Central Avenue Kearney, NE 68847 Telephone: (308) 234-1994 FAX: (308) 234-5776
Nevada	**Elko**	Cummins Rocky Mountain, LLC 5370 East Idaho Street Elko, NV 89801 Telephone: (702) 738-6405 FAX: (702) 738-1719
Nevada	**Las Vegas**	Cummins Rocky Mountain, LLC 2750 Losee Road North Las Vegas, NV 89030 Telephone: (702) 399-2614 FAX: (702) 399-7457
Nevada	**Sparks**	Cummins Rocky Mountain, LLC 150 Glendale Avenue Sparks, NV 89431 Telephone: (775) 331-4983 FAX: (775) 331-7429
New Jersey	**Newark**	Cummins Metropower, Inc. 41-85 Doremus Ave. Newark, NJ 07105 Telephone: (973) 491-0100 FAX: (973) 578-8873
New Mexico	**Albuquerque**	Cummins Rocky Mountain, LLC 1921 Broadway N.E. Albuquerque, NM 87102 Telephone: (505) 247-2441 FAX: (505) 842-0436
New Mexico	**Farmington**	Cummins Rocky Mountain, LLC 1101 North Troy King Road Farmington, NM 87401 Telephone: (505) 327-7331 FAX: (505) 326-2948
New York	**Bronx**	Cummins Metropower, Inc. 890 Zerega Avenue Bronx, NY 10473 Telephone: (718) 892-2400 FAX: (718) 892-0055
New York	**Albany**	Cummins Northeast, Inc. 101 Railroad Avenue Albany, NY 12205 Telephone: (518) 459-1710 FAX: (518) 459-7815
New York	**Buffalo**	Cummins Northeast, Inc. 480 Lawrence Bell Dr. Williamsville, NY 14221-7090 Telephone: (716) 631-3211 FAX: (716) 626-0799

New York	**Syracuse**	Cummins Northeast, Inc. 6193 Eastern Avenue Syracuse, NY 13211 Telephone: (315) 437-2751 FAX: (315) 437-8141
North Carolina	**Charlotte**	Cummins Atlantic, Inc. 11101 Nations Ford Road Charlotte, NC 28273 Telephone: (704) 588-1240 FAX: (704) 587-4870
North Carolina	**Charlotte**	Cummins Atlantic, Inc. 3700 North Interstate 85 Charlotte, NC 28206 Telephone: (704) 596-7401 FAX: (704) 596-3038
North Carolina	**Greensboro**	Cummins Atlantic, Inc. 513 Preddy Boulevard > = reensboro, NC 27406 Telephone: (336) 275-4531 FAX: (336) 275-8304
North Dakota	**Fargo**	Cummins NPower, LLC 3801 - 34th Ave. SW Fargo, ND 58104 Telephone: (701) 282-2466 FAX: (701) 277-5399
North Dakota	**Grand Forks**	Cummins NPower, LLC 4728 Gateway Drive Grand Forks, ND 58201 Telephone: (701) 775-8197 FAX: (701) 775-4833
North Dakota	**Minot**	Cummins NPower, LLC 1501 - 20th Avenue, S.E. Minot, ND 58701 Telephone: (701) 852-3585 FAX: (701) 852-3588
Ohio	**Columbus**	Cummins Bridgeway, LLC 4000 Lyman Drive Hilliard (Columbus), OH 43026 Telephone: (614) 771-1000 FAX: (614) 771-0769
Ohio	**Cincinnati**	Cummins Interstate Power, Inc. 10470 Evendale Drive Cincinnati, OH 45241 Telephone: (513) 563-6670 FAX: (513) 563-0594
Ohio	**Cleveland**	Cummins Bridgeway, LLC 7585 Northfield Road Cleveland, OH 44146 Telephone: (440) 439-6800 FAX: (440) (440) 439-2131 Toll Free: (800) 243-6885

Ohio	**Toledo**	Cummins Bridgeway, LLC 801 Illinois Avenue Maumee , OH 43537 Telephone: (419) 893-8711 FAX: (419) 893-5362
Ohio	**Youngstown**	Cummins Bridgeway, LLC 7145 Masury Road Hubbard (Youngstown), OH 44425 Telephone: (216) 534-1935 FAX: (216) 534-5606
Oklahoma	**Oklahoma City**	Cummins Southern Plains ,Ltd. 5800 West Reno Oklahoma City, OK 73127 Telephone: (405) 946-4481 (24 hours) FAX: (405) 946-3336
Oklahoma	**Tulsa**	Cummins Southern Plains, Ltd. 16525 East Skelly Drive Tulsa, OK 74116 Telephone: (918) 234-3240 FAX: (918) 234-2342
Oregon	**Coburg/Eugene**	Cummins Northwest, Inc. 91201 Industrial Parkway Coburg, OR 97401 (Telephone: (541) 687-0000 FAX: (541) 687-1977 Toll Free Telephone (800)777-0336
Oregon	**Medford**	Cummins Northwest, Inc. 4045 Crater Lake Highway Medford, OR 97504-9796 Telephone: (541) 779-0151 FAX: (541) 772-2395 Toll Free Telephone (800)826-9414
Oregon	**Pendleton**	Cummins Northwest, Inc. 223 S.W. 23rd Street Pendleton, OR 97801-1810 Telephone: (541) 276-2561 FAX: (541) 276-2564 Toll Free Telephone (800)666-2561
Oregon	**Portland**	Cummins Northwest, Inc. 4711 N. Basin Avenue Portland, OR 97217-3557 Telephone: (503)286-5938 FAX: (503)286-5938 Toll Free Telephone: ((800)283-0336 FAX: (503)240-5553
Pennsylvania	**Philadelphia**	Cummins Power Systems, Inc. 2727 Ford Road Bristol, PA 19007 Telephone: (215) 785-6005 FAX: (215) 785-4085

Pennsylvania	**Pittsburgh**	Cummins Power Systems, Inc. 3 Alpha Drive Pittsburgh, PA 15138-2901 Telephone: (412) 820-8300 FAX: (412) 820-8308
Pennsylvania	**Harrisburg**	Cummins Power Systems, Inc. 4499 Lewis Road Harrisburg, PA 17111-2541 Telephone: (717) 564-1344 FAX: (717) 558-8217
Puerto Rico		Cummins de Puerto Rico, Inc. Calle 1 G1 Urb. Industrial, Barrio Palmas Cataño ZIP / Postal Code: 00962 Puerto Rico Telephone: (787) 275-2000 FAX: (787) 275-2030
South Carolina	**Charleston**	Cummins Atlantic Inc. 231 Farmington Road Charleston, SC 29483 Telephone: (843) 851-9819 FAX: (843) 875-4338
South Carolina	**Columbia**	Cummins Atlantic, Inc. 2791 Shop Road Ext Columbia, South Carolina 29209 Telephone: (803) 799-2410 FAX: (803) 779-3427
South Dakota	**Sioux Falls**	Cummins Central Power, LLC 701 East 54th Street North Sioux Falls, SD 57104 Telephone: (605) 336-1715 FAX: (605) 336-1748
Tennessee	**Memphis**	Cummins Mid-South, LLC 670 Riverside Drive Memphis, TN 38173 Telephone: (901) 577-0600 FAX: (901) 522-8758
Tennessee	**Chattanooga**	Cummins South, Inc. 1509 East 26th Street Chattanooga, TN 37407-1095 Telephone: (423) 629-1447 FAX: (423) 629-1494
Tennessee	**Knoxville**	Cummins Cumberland, Inc. 1211 Ault Road Knoxville, TN 37914 Telephone: (423) 523-0446 FAX: (423) 523-0343
Tennessee	**Memphis**	Cummins Mid-South, LLC 1784 E. Brooks Road Memphis, TN 38116 Telephone: (901) 577-0666 FAX: (901) 522-8758

Tennessee	**Nashville**	Cummins Cumberland, Inc. 706 Spence Lane Nashville, TN 37217 Telephone: (615) 366-4341 FAX: (615) 366-5693
Texas	**Arlington**	Cummins Southern Plains, Ltd. 600 N Watson Road Arlington, TX 76004-76011 Telephone: (817) 640-6801 FAX: (817) 640-6852
Texas	**Amarillo**	Cummins Southern Plains, Ltd. 5224 Interstate 40 - Expressway East Amarillo, TX 79120-1570 Telephone: (806) 373-3793 (24 hours) FAX: (806) 372-8547
Texas	**Dallas**	Cummins Southern Plains, Ltd. 3707 Irving Boulevard Dallas, TX 75247 Telephone: (214) 631-6400 (24 hours) FAX: (214) 631-2322
Texas	**El Paso**	Cummins Rocky Mountain, LLC 14333 Gateway West El Paso, TX 79927 Telephone: (915) 852-4200 FAX: (915) 852-3295
Texas	**Fort Worth**	Cummins Southern Plains, Ltd. 3250 North Freeway Fort Worth, TX 76111 Telephone: (817) 624-2107 (24 hours) FAX: (817) 624-3296
Texas	**Houston**	Cummins Southern Plains, Ltd. 7045 North Loop East Houston, Texas 77028 Telephone: (713) 679-2220 FAX: (713) 679-7774
Texas	**Mesquite**	Cummins Southern Plains, Ltd. 2615 Big Town Blvd. Mesquite, TX 75150 Telephone: (214) 321-5555 (24 hours) FAX: (214) 328-2732
Texas	**Odessa**	Cummins Southern Plains, Ltd. 1210 South Grandview P.O. Box 633 Odessa, Texas 79761 Telephone: (915) 332-9121 (24 hours) FAX: (915) 333-4655
Texas	**San Antonio**	Cummins Southern Plains, Ltd. 6226 Pan Am Expressway North San Antonio, TX 78218-0385 Telephone: (512) 655-5420 (24 hours) FAX: (512) 655-3865

Utah	**Salt Lake City**	Cummins Rocky Mountain, LLC 1030 South 300 West Salt Lake City, UT 84101 Telephone: (801) 524-1321 FAX: (801) 524-1351
Virginia		
Virginia	**Richmond**	Cummins Atlantic, Inc. 3900 Deepwater Terminal Road Richmond, VA 23234 Telephone: (804) 232-7891 FAX: (804) 232-7428
Virginia	**Tidewater**	Cummins Atlantic, Inc. 3729 Holland Blvd. Chesapeake, VA 23323 Telephone: (757) 485-4848 FAX: (757) 485-5085
Washington	**Seattle**	Cummins Northwest, Inc. 811 S.W. Grady Way Renton, WA 98055 Telephone: (425) 235-3400 FAX: (425) 235-8202 Toll Free: (800) 274-0336
Washington	**Chehalis**	Cummins Northwest, Inc. 926 N.W. Maryland Chehalis, WA 98532-0339 Telephone: (360) 748-8841 FAX: (360) 748-8843 Toll Free: (800) 451-5506
Washington	**Spokane**	Cummins Northwest, Inc. 11134 W. Westbow Blvd. Spokane, WA 99204 Telephone: (509) 455-4411 FAX: (509) 624-4681 Toll Free: (800) 825-2122
Washington	**Tacoma**	Cummins Northwest, Inc. 3701 Pacific Highway East Tacoma, WA 98424-1135 Telephone: (253) 922-2191 FAX: (253) 922-2379
Washington	**Yakima**	Cummins Northwest, Inc. 1905 East Central Avenue Yakima, WA 98901 Telephone: (509) 248-9033 FAX: (509) 248-9035 Toll Free: (800) 688-9033
West Virginia	**Charleston**	Cummins Cumberland, Inc. 3100 MacCorkle Ave. SW P.O. Box 8456 South Charleston, WV 25303 Telephone: (304) 744-6373 FAX: (304) 744-8605

West Virginia	**Fairmont**	Cummins Cumberland, Inc. Rt 73 So. 145 Middletown Rd Fairmont, WV 26554 Telephone: (304) 367-0196 FAX: (304) 367-1077
Wisconsin	**DePere**	Cummins NPower, LLC Corporate Office 875 Lawrence Drive DePere, WI 54115-5070 Telephone: (920) 337-1991 FAX: (920) 337-9746
Wisconsin		Cummins NPower, LLC 939 Lawrence Dr DePere, Wisconsin 54115 Telephone: (920) 336-9631 FAX: (920) 7336-8984
Wisconsin	**Eau Claire**	Cummins NPower, LLC W2600 Jopke Road P. O. Box 5070 Eau Claire, Wisconsin 54701 Telephone: (715)830-0996 FAX: (715) 830-1087
Wisconsin	**Milwaukee**	Cummins NPower, LLC 840 West Ryan Road Oak Creek, WI 53154 Telephone: (414) 768-7400 FAX: (414) 768-9441
Wisconsin	**Wausau**	Cummins NPower, LLC 7815 Camp Phillips Rd Wausau, WI 54476 Telephone: (715) 359-6888 FAX: (715) 359-3744
Wyoming	**Gillette**	Cummins Rocky Mountain, LLC 2700 Hwy. 14 & 16 North P.O. Box 1207 (82717) Gillette, WY 82716 Telephone: (307) 682-9611 FAX: (307) 682-8242 Toll Free: (800) 773-9611
Wyoming	**Rock Springs**	Cummins Rocky Mountain, LLC 2000 Foothill Blvd. P.O. Box 1634 Rock Springs, WY 82901 Telephone: (307) 362-5168 FAX: (307) 362-5171

Distributors and Branches - Canada

Alberta	**Edmonton**	Cummins Western Canada 11751 - 181 Street Edmonton, AB T5S 2K5 Telephone: (780) 455-2151 FAX: (780) 454-9512
Alberta		Cummins Western Canada 4887 - 35th Street S.E. Calgary, Alberta T2B 3H6, Canada Telephone: (403) 569-1122 FAX: (403) 569-0027
Alberta	**Hinton**	Cummins Western Canada 122 Hampshire Road Hinton, Alberta T7V 1G8, Canada Telephone: (780) 865-5111 FAX: (780) 865-5714
Alberta	**Lethbridge**	Cummins Western Canada 4005 - 14th Ave N Lethbridge, Alberta T1H 6P6, Canada Telephone: (403) 329-6144 FAX: (403) 320-5383
British Columbia	**Vancouver**	Cummins Western Canada 18452 - 96th Avenue Surrey, B.C., Canada V4N 3P8 Telephone: (604) 882-5000 FAX: (604) 882-5080
British Columbia	**Kamloops**	Cummins Western Canada 976 Laval Crescent Kamloops, B.C. Canada V2C 5P5 Telephone: (250) 828-2388 FAX: (250) 828-6713
British Columbia	**Prince George**	Cummins Western Canada Prince George, B.C. V2M 6E9 Telephone: (250) 564-9111 FAX: (250) 564-5853
British Columbia	**Sparwood**	Cummins Western Canada 731 Douglas Fir Road Sparwood, B.C. VOB 2GO, Canada Telephone: (250) 425-0522 FAX: (250) 425-0323
New Brunswick	**Fredericton**	Cummins Eastern Canada, LP R.R.#1 Doak Road Fredericton, New Brunswick E3B 4X2, Canada Telephone: (506) 451-1929 FAX: (506) 451-1927
Newfoundland	**St. John's**	Cummins Eastern Canada, LP 122 Clyde Avenue Donovans Industrial Park Mount Pearl, Newfoundland A1N 2C2 Canada Telephone: (709) 747-0176 FAX: (709) 747-2283

Newfoundland	**Wabush**	Cummins Eastern Canada, LP Wabush Industrial Park Wabush, Newfoundland A0R 1B0 Telephone: (709) 282-3626 FAX: (709) 282-3108
Nova Scotia	**Halifax**	Cummins Eastern Canada, LP 50 Simmonds Drive Dartmouth, Nova Scotia B3B 1R3 Telephone: (902) 468-7938 FAX: (902) 468-5177
Ontario		
Ontario	**Kenora**	Cummins Mid-Canada Ltd. Highway 17 East P.O. Box 8 Kenora, Ontario P9N 3X1 Telephone: (807) 548-1941 FAX: (807) 548-8302
Ontario	**Ottawa**	Cummins Eastern Canada, LP 3189 Swansea Crescent Ottawa, Ontario K1G 3W5, Telephone: (613) 736-1146 FAX: (613) 736-1202
Ontario	**Thunder Bay**	Cummins Eastern Canada, LP 1400 W. Walsh Street Thunder Bay Ontario P7E 4X4 Telephone: (807) 577-7561 FAX: (807) 577-1727
Quebec	**Dorval**	Cummins, Eastern Canada, LP 580 Lepihe Dorval, Quebec H9H 1G2 Telephone: (514) 631-5000 FAX: (514) 631-0104
Quebec	**Quebec City**	Cummins Eastern Canada, LP Branch of Cummins Americas, Inc. 2400 Watt Street Ste Foy, Quebec G1P 3T3 Canada Telephone: (418) 651-2911 FAX: (418)651-0965
Quebec	**Val D'Or**	Cummins, Eastern Canada, LP Val D'Or, Quebec J9P 4P6 Telephone: (514) 695-8410 FAX: (514) 695-8917
Saskatchewan	**Lloydminster**	Cummins Western Canada 3709 - 44th Street Lloydminster, SK S9V 0Y9 Telephone: (305) 825-2062 FAX: (305) 825-6702
Saskatchewan	**Regina**	Cummins Western Canada 110 Kress Street Regina, SK S4P 2Z5 Telephone: (306) 721-9710 FAX: (306) 721-2962

Saskatchewan	**Saskatoon**	Cummins Western Canada 3001 Faithful Avenue Saskatoon, SK S7K 4R4, Canada Telephone: (306) 933-4022 FAX: (306) 242-1722

Distributors and Branches - Australia

Branches:	**Gepps Cross**	Cummins Engine Company, Pty. Ltd. P.O. Box 108 Blair Athol, 5084 South Australia, Australia Location: 45-49 Cavan Road Gepps Cross, 5094 Telephone: (61-8) 8262-5211
Branches:	**Dosra**	Cummins Engine Company, Pty. Ltd. P.O. Box 124 Darra, 4076 Queensland, Australia Location: 33 Kimberley Street Darra, 4076, Australia Telephone: (61-7) 3375-3277
Branches:	**Bunbury**	Cummins Engine Company, Pty. Ltd. P.O. Box 1751 Bunbury, WA 6230 Australia Location: 11 Dryanda Court Picton, WA 6230 Telephone: (61-8) 9725-6777 FAX: (61-8) 9725-6444
Branches:	**Cairns**	Cummins Engine Company, Pty. Ltd. P.O. Box 7189 Cairns Mail Centre, 4870 Queensland, Australia Location: Liberty Street Cairns, 4870 Telephone: (61-7) 935-2999
Branches:	**Campbellfield**	Cummins Engine Company, Pty. Ltd. Private Bag 9 Campbellfield, 3061 Victoria, Australia Location: 1788-1800 Hume Highway Campbellfield, 3061 Telephone: (613) 9357-9200
Branches:	**Dandenong**	Cummins Engine Company, Pty. Ltd. Lot 7 Greens Road Dandenong, 3175 Victoria, Australia Telephone: (613) 9706-8088
Branches:	**Darwin**	Cummins Engine Company, Pty. Ltd. P.O. Box 37587 Winnellie, 0821 Northern Territory, Australia Location: Lot 1758 Graffin Crescent Winnellie, 0821 Telephone: (61-8) 8947-0766

Branches:	**Devonport**	Cummins Engine Company, Pty. Ltd. P.O. Box 72E Tasmania, Australia Location: 2 Matthews Way Devonport, 7310 Telephone: (61-3) 6424-8800
Branches:	**Emerald**	Cummins Engine Company, Pty. Ltd. P.O. Box 668 Emerald, 4720 Queensland, Australia Location: Capricorn Highway Emerald, 4720 Telephone: (61-7) 4982-4022
Branches:	**Grafton**	Cummins Engine Company, Pty. Ltd. P.O. Box 18 South Grafton, 2461 New South Wales, Australia Location: 18-20 Induna Street South Grafton, 2461 Telephone: (61-2) 6642-3655
Branches:	**Hexham**	Cummins Engine Company, Pty. Ltd. 21 Galleghan Street Hexham New South Wales, Australia Telephone: (61-2) 4964-8466 FAX: (61-2) 4964-8616
Branches:	**Kalgoorlie**	Cummins Engine Company, Pty. Ltd. P.O. Box 706 Kalgoorlie, 6430 Western Australia, Australia Location: 16 Atbara Street Kalgoorlie, 6430 Telephone: (61-8) 9021-2588
Branches:	**Karratha**	Cummins Engine Company, Pty. Ltd. P.O. Box 377 Karratha, WA 6714 Australia Location: 1490 Lambert Road Karratha, WA 6714 Australia Telephone: (61-8) 9144-4646 FAX: (61-8) 9143-1507
Branches:	**Laverton**	Cummins Engine Company, Pty. Ltd. Locked Bag 1 Laverton, Victoria 3028 Australia Location: 195 Boundary Road Laverton North, Victoria 3028 Australia Telephone: (61-3) 9360-0800 FAX: (61-3) 9360-0438

Branches:	**Leeton**	Cummins Engine Company, Pty. Ltd. P.O. Box 775 Leeton, NSW 2705 Australia Location: 29 Brady Way Leeton, NSW 2705 Australia Telephone: (61-2) 6953-3077 FAX: (61-2) 6953-3109
Branches:	**Mackay**	Cummins Engine Company, Pty. Ltd. P.O. Box 842 Mackay, 4740 Queensland, Australia Location: 4 Presto Avenue Mackay, 4746 Telephone: (61-7) 4955-1222
Branches:	**Mount Gambier**	Cummins Engine Company, Pty. Ltd. P.O. Box 2219 Mount Gambier, 5290 South Australia, Australia Location: 2 Avey Road Mount Gambier, 5290 Telephone: (61-87) 25-6422
Branches:	**Penrith**	Cummins Engine Company, Pty. Ltd. P.O. Box 132 Cambridge Park, 2747 New South Wales, Australia Location: 7 Andrews Road Penrith, 2750 Telephone: (61-2) 4729-1313
Branches:	**Queanbeyan**	Cummins Engine Company, Pty. Ltd. P.O. Box 527 Queanbeyan, 2620 New South Wales, Australia Location: 15-27 Bayldon Road Queanbeyan, 2620 Telephone: (61-2) 6297-3433 FAX: (61-2) 6297-6709
Branches:	**Regency Park**	Cummins Engine Company, Pty. Ltd. P.O. Box 2147 Regency Park, SA 5942 Australia Location: 11 Manton Street Hindmarsh, SA 5942 Australia Telephone: (61-8) 8346-3832 FAX: (61-8) 8340-2045

Branches:	**Swan Hill**	Cummins Engine Company, Pty. Ltd. P.O. Box 1264 Swan Hill, 3585 Victoria, Australia Location: 5 McAllister Road Swan Hill, 3585 Telephone: (61-3) 5032-1511
Branches:	**Tamworth**	Cummins Engine Company, Pty. Ltd. P.O. Box 677 Tamworth, 2320 New South Wales, Australia Location: Lot 65 Gunnedah Road Tamworth, 2340 Telephone: (61-2) 6765-5455
Branches:	**Townsville**	Cummins Engine Company, Pty. Ltd. P.O. Box 7339 Garbutt Business Centre, QLD4814 Australia Location: 704-710 Ingham Road Townsville, QLD 4814 Telephone: (61-7) 4774-7733 FAX: (61-7) 4774-7640
Branches:	**Welshpool**	Cummins Engine Company, Pty. Ltd. P. O. Box 52 Welshpool, 6986 Western Australia, Australia Location: 50 Kewdale Road Welshpool, 6106 Telephone: (61-8) 9458-5911
Branches:	**Wetherill Park**	Cummins Engine Company, Pty. Ltd. Private Bag 150 Wetherill Park, NSW 2164 Australia Location: 492-494 Victoria Street Wetherill Park, NSW 2164 Australia Telephone: (61-2) 9616-5300 FAX: (61-2) 9616-5399
Branches:	**Wodonga**	Cummins Engine Company, Pty. Ltd. P.O. Box 174 Wodonga, 3690 Victoria, Australia Location: 9-11 McKoy Street Wodonga, 3690 Telephone: (61-2) 6024-3655

Distributors and Branches - New Zealand

Auckland		Cummins Engine Company, Pty. Ltd. Private Bag 92804 Penrose, Auckland, New Zealand Location: 440 Church Street Penrose Telephone: (64-9) 579-0085
Branches:	**Auckland**	Cummins Engine Company, Pty. Ltd. Private Bag 92804 Penrose, Auckland, New Zealand Location: 440 Church Street Penrose Telephone: (64-9) 579-0085
Branches:	**Christchurch**	Cummins Engine Company, Pty. Ltd. P.O. Box 16-149 Hornby, Christchurch, New Zealand Location: 35 Parkhouse Road Sockburn, Christchurch Telephone: (64-3) 348-8170
Branches:	**Dunedin**	Cummins Engine Company, Pty. Ltd. P.O. Box 2333 South Dunedin, New Zealand Location: 8 Devon Street Dunedin Telephone: (643) 477-8818
Branches:	**Palmerston North**	Cummins Engine Company, Pty. Ltd. P.O. Box 9024 Palmerston North, New Zealand Location: 852-860 Tremaine Avenue Telephone: (64-6) 356-2209
Branches:	**Rotorua**	Cummins Engine Company, Pty. Ltd. P.O. Box 934 Rotorua, New Zealand Location: 328 Te Ngae Road Rotorua Telephone: (647) 345-6699

Regional Offices - International - Locations

Regional Office - Daventry

Cummins Engine Co. Ltd (Serving Czech Republic), (Middle East), (Africa)
Royal Oak Way South
Daventry, Northamptonshire
ZIP / Postal Code: NN11 8NU
Brussels
Telephone: (44-1327) 886 000
Fax: (44-1327) 886 100

Region	Africa	
Countries Covered:	Burkina Faso	Burundi
	Cameroon	Central African Republic
	Chad	Congo (Democratic Republic),
	Congo (People's Republic)	Cote d'Ivoire (Ivory Coast)
	Djibouti	Equatorial Guinea,
	Eritrea	Ethiopia
	Gabon	Gambia
	Ghana	Guinea
	Guinea-Bissau	Kenya
	Liberia	Libya
	Mali	Malta
	Mauritania	Morocco
	Niger	Nigeria
	Rwanda	Sao Tome & Principe
	Senegal	Sierra Leone
	Somalia	Togo
	Tunisia	Uganda
	Cape Verde	
Region	Czech Republic	
Countries Covered:	Austria	Czech Republic
	Hungary	Poland
Region	Middle East	
Countries Covered:	Afghanistan	Bahrain
	Cyprus	Egypt
	Iran	Iraq
	Jordan	Kuwait
	Lebanon	Oman
	Pakistan	Qatar
	Republic of Yemen	Saudi Arabia
	Sudan	Syria
	Turkey	United Arab Emirates

Cumbrasa Regional Office - Brazil

Cummins Brasil Ltda.
Rua Jati, 266
07180-900 Guarulhos
Sao Paulo, Brazil
Telephone: (55-11) 6465-9811
Fax: (55-11) 6412-1483

Country Covered:	Brazil

Beijing Regional Office - China	
Cummins Corporation Bejing Branch (CCBJ) 28, Tower A, Gateway, 18, Xiaguangli North Road, East Third Ring Chaoyang District Beijing 100027 People's Republic of China Telephone: (86-10) 84548888 Fax: (86-10) 6462-0226	

Countries Covered:
- China
- Hong Kong S.A.R
- Mongolia
- Taiwan

Gross-Gerau Regional Office - Germany	
Cummins Diesel Deutschland GmbH Odenwaldstr. 23 Groß-Gerau 64521 Germany Telephone: (49-6152) 174-0 Fax: (49-6152) 174-141	

Countries
- Germany
- Switzerland

Cummins India Ltd.	
Kothrud Pune, Maharashtra ZIP / Postal Code: 411029 India Telephone: (91-20) 2538-5435 / 0240 / 1105 Fax: (91-20) 2538-0125	

Countries Covered:
- Bhutan
- India
- Nepal

Tokyo Regional Office - Japan	
Cummins Japan Ltd. 2nd Floor, Ichiboshi Shiba Bldg 2-14, Shiba 2-chome Minato, Tokyo ZIP / Postal Code: 105-0014 Japan Telephone: (81-3) 5444-7600 Fax: (81-3) 5444-0530	

Country Covered:
- Japan

Seoul Regional Office - Korea	
Cummins Korea Ltd. 25th floor, ASEM tower 159-1, Samsung-Dong Kangnam-ku, Seou ZIP / Postal Code: 135-798 South Korea Telephone: (82-2) 3420-0901 Fax: (82-2) 3452-4113 / 539-6569	

Country Covered:	South Korea

Col. Polanco Regional Office - Mexico	
Cummins, S. de R.L. de C.V. Arquimedes No. 209 Col. Polanco 4605 Modern Lane Mexico, Distrito Federal ZIP / Postal Code: 11560 Mexico Telephone: (52-5) 254-3822 / 3783 / 3622 Fax: (52-5) 254-3645	

Country Covered:		
	Mexico	Costa Rica
	Guatemala	Nicaragua
	Honduras	Panama

Moscow Regional Office - Russia	
Cummins Engine Co., Inc. Park Place Office E708 113/1 Leninsky Prospect Russia 117198 Telephone: (7-495) 956-51-22 / 23 Fax: (7-495) 956-53-62	

Countries Covered:		
	Armenia	
	Azerbaijan	Moldova
	Belarus	Russia
	Tajikistan	
	Georgia	Turkmenistan
	Kyrgyzstan	Ukranie
	Kazakhstar	Uzbekistan

Southeast Asia Regional Office - Singapore **Singapore**	
Cummins Diesel Sales Corporation 8 Tanjong Penjuru ZIP / Postal Code: 609019 Singapore Telephone: (65) 265-0155 Fax - Parts/MIS/Shipping: (65) 6264-0664	

Countries Covered:		
	Bangladesh	Malaysia
	Brunei	
		Philippines
	Cambodia	Singapore
		Sri Lanka
	Indonesia	Thailand
	Laos	Vietnam

Latin America Regional Office - Miramar (U.S.A.)	
Cummins Americas, Inc. 3350 SW 148 Avenue Suite 205 Miramar, FL 33027 U.S.A. Telephone: (954) 431-5511 Fax: (954) 433-5797	

Countries Covered:		
	Argentina	
	Bolivia	
	Chile	
	Colombia	
		Paraguay
	Dominican Republic	Peru
		Uruguay
	El Salvador	Venezuela
	Eucador	
	Costa Rica	Honduras
	Dominican	Nicaragua

Distributors - International - Locations

Cummins Middle East FZE	**Cummins Middle East FZE**	P.O. Box No 17636, Units ZF 05 & 06 Jebel Ali Free Zone, Dubai United Arab Emirates Telephone: 00 9714 8838998 Fax: 00 9714 8838997
United Arab Emirates	**Cummins Emirates Sales & Service LLC**	P.O. Box No 54044 Al Quoz Industrial Estate, Dubai United Arab Emirates Telephone: 00 9714 3478184 Fax: 00 9714 3478185 Toll Free: 800 4184
United Arab Emirates	**Cummins Emirates Sales & Service LLC**	P.O. Box No 70242, Abu Dhabi United Arab Emirates Telephone: 00 9712 6722980 Fax: 00 9712 6722981
ALBANIA		(Please contact the Central & Eastern European Regional Office) Cummins Diesel Deutschland GmbHGross-Gerau Odenwaldstraße 23 Groß-Gerau ZIP / Postal Code: 64521 Germany Telephone: (49-6152) 174-0 Fax: (49-6152) 174-141
ALGERIA		(Please contact) Cummins Diesel S.A. 39 rue Ampère BP 190 Chassieu cédex 69680 France Telephone: (33-4) 72 22 92 72 Fax: (33-4) 78 90 19 56
ALGERIA		-See SOUTH PACIFIC ISLANDS (Please contact) Cummins 2 Caribbean Drive Scoresby 3179 Victoria AUSTRALIA Telephone: (61-3) 9765-3222 Fax: (61-3) 9763-0079
ANDORRA		- See European Regional Office - Mechelen
ANDORRA		Cummins Belgium Egide Walschaertsstraat, 2 Industriepark Zuid 2800 Mechelen Belgium Europe Telephone: (32-15) 47 91 00 Fax: (32-15) 27 56 86
ANDORRA		

ANGOLA	**(Please contact) Cummins Diesel South Africa (Pty) Ltd**	13 Eastern Service Road Kelvin (Neighbourhood), Alexandra Rua Major Kahangulo, 134/140 Gauteng, South Africa ZIP / Postal Code: 2054 South Africa Telephone: (27-11) 321 8700 Fax: (27-11) 444 2012
ANTIGUA		Miami (Office In U.S.A.) Cummins Power South, LLC 9900 N.W. 77 Ave. Hialeah Gardens, FL 33016 Telephone: (305) 821-4200 Fax: (305) 557-2992
ARGENTINA	**Buenos Aires**	Distribuidora Cummins, S.A. Ruta Panamericana KM 32.5 El Talar de Pacheco, Buenos Aires ZIP / Postal Code: CP 1618 Argentina Telephone: (54-11) 4736-6400 Fax: (54-11) 4736-6479 / 6466
ARUBA, ISLAND OF		(Please contact) Cummins Power South, LLC 9900 N W 77th Ave. Hialeah Gardens, Florida 33016 Telephone: (1-305) 821-4200 Fax: (1-305) 557-2992
AUSTRALIA	**Bunbury**	Cummins 11 Dryanda Court Picton Bunbury, Western Australia 6229 Telephone: (61-8) 9725-6777 Fax: (61-8) 9725-6444
AUSTRALIA	**Cairns**	Cummins 11 Liberty Street Cairns, Queensland 4870 Australia Telephone: (61-7) 935-2999 Fax: (61-7) 4035 2909
AUSTRALIA	**Campbellfield**	Cummins 1788-1800 Hume Highway Campbellfield, Victoria 3061 Australia Telephone: (613) 9357-9200 Fax: (613) 9357 9916
AUSTRALIA	**Dandenong**	Cummins 46 Greens Road Dandenong, Victoria 3175 Australia Telephone: (613) 9706-8088 Fax: (613) 9706 8016
AUSTRALIA	**Darwin**	Cummins Lot 1758 Graffin Crescent Winnellie, Darwin Northern Territory 0820 Australia Telephone: (61-8) 8947-0766 Fax: (61-8) 8984 4569

AUSTRALIA	**Devonport**	Cummins 2 Matthews Way Devonport, Tasmania 7310 Australia Telephone: (61-3) 6424-8800 Fax: (61-3) 6424 2200
AUSTRALIA	**Emerald**	Cummins 23 Old Sheepyard Place Emerald, Queensland 4720 Australia Telephone: (61-7) 4982 4022 Fax: (61-7) 4982 4159
AUSTRALIA	**Grafton**	Cummins 18 - 20 Induna Street South Grafton, New South Wales 2460 Australia Telephone: (61-2) 6641 1000 Fax: (61-2) 6641 1099
AUSTRALIA	**Hexham**	Cummins Engine Company, Pty. Ltd. 21 Galleghan Street Hexham Newcastle, New South Wales, Australia 2322 Telephone: (61-2) 4964-8466 Fax: (61-2) 4964-8616
AUSTRALIA	**Kalgoorlie**	Cummins Lot 62 Great Eastern Highway Cnr Hunter Street Kalgoorlie, Western Australia ZIP / Postal Code: 6430 Australia Telephone: (61-8) 9080 1300 Fax: (61-8) 9091 7933
AUSTRALIA	**Karratha**	Cummins 1964 Anderson Road Karratha, Western Australia 6714 Australia Telephone: (61-8) 9144 4646 Fax: (61-8) 9143 1507
AUSTRALIA	**Laverton**	Cummins 191-195 Boundary Road Laverton North, Victoria 3026 Australia Telephone: (61-3) 8368 0800 Fax: (61-3) 9360 0438
AUSTRALIA	**Leeton**	Cummins 29 Brady Way Leeton, NSW 2705 Australia Telephone: (61-2) 6953-3077 Fax: (61-2) 6953-3109

AUSTRALIA	**Mackay**	Cummins 46 Southgate Drive Paget, Queensland ZIP / Postal Code: 4740 Australia Telephone: (61-7) 4952 8100 Fax: (61-7) 4952 5631
AUSTRALIA	**Mount Gambier**	Cummins 2 Avey Road Mount Gambier, South Australia 5290 Australia Telephone: (61-8) 8725 6422 Fax: (61-8) 8724 9764
AUSTRALIA	**Penrith**	Cummins Total Truck Centre141 Coreen Avenue Penrith, New South Wales 2750 Australia Telephone: (61-2) 4731 2188 Fax: (61-2) 4731 1140
AUSTRALIA	**Queanbeyan**	Cummins 15-17 Bayldon Road Queanbeyan, New South Wales 2620 Australia Telephone: (61-2) 6297 3433 Fax: (61-2) 6297 6709
AUSTRALIA	**Swan Hill**	Cummins 5 McAllister Road Swan Hill, Victoria 3585 Australia Telephone: (61-3) 5033 1511 Fax: (61-3) 5032 9662
AUSTRALIA	**Tamworth**	Cummins Lot 65 Gunnedah Road Tamworth, New South Wales 2340 Australia Telephone: (61-2) 6765 5455 Fax: (61-2) 6765 5443
AUSTRALIA	**Townsville**	Cummins 704-710 Ingham Road Townsville, Queensland 4810 Australia Telephone: (61-7) 4774 7733 Fax: (61-7) 4774 7640
AUSTRALIA	**Welshpool**	Cummins 443 Horrie Miller Drive Industrial Park Perth International Airport, Western Australia 6105 Australia Telephone: (61-7) 9475 8777 Fax: (61-7) 9475 8666
AUSTRALIA	**Wetherill Park**	Cummins 492-494 Victoria Street Wetherill Park, New South Wales 2164 Australia Telephone: (61-2) 9616 5300 Fax: (61-2) 9616 5399

AUSTRALIA	**Wodonga**	Cummins 9 - 11 McKoy Street Wodonga, Victoria 3690 Australia Telephone: (61-2) 6024 3655 Fax: (61-2) 6024 3102
AUSTRIA	**Neudörfl**	Cummins Bickfordstraße 25 Neudörfl, Burgenland 7201 Austria Telephone: (43-2622) 77418 0 Fax: (43-2622) 77418 4
BAHAMAS	**Miami (Office in U.S.A.)**	Cummins Power South, LLC 9900 N W 77th Ave. Hialeah Gardens, FL 33016 Telephone: (305) 821-4200 Fax: (305) 557-2992
BAHRAIN	**Bahrain**	Yusuf Bin Ahmed Kanoo W.L.L. Commercial Division 832 Majlees Al Tawoon Highway, Al-Hamriya 611, Sitra Manama ZIP / Postal Code: Kingdom of Bahrain Bahrain Telephone: (973) 17 738200 Fax: (973) 17 732828
BALEARIC ISLANDS	**Madrid (Office in Spain)**	Cummins Ventas y Servicio, S.A. Torrelaguna, 56 Madrid 28027 Spain Telephone: (34-91) 367-2000 376-2404 Fax: (34-91) 407 6604
BANGLADESH	**MIR Trading Co.**	House #55/1, Road # 8/A Dhamondi R/A Dhaka 1205 Bangladesh Telephone: (880-2) 8959425-7, 8960680-1, 8960643 Fax: (880-2) 8961373
BARBADOS	**Miami (Office in U.S.A.)**	Cummins Power South, LLC 900 N W 77th Ave. Hialeah Gardens, Florida 33016 Telephone: (305) 821-821-4200 Fax: (305) 557-2992
BELGIUM	**Mechelen**	Cummins Distributor Egide Walschaertsstraat, 2 Industriepark Zuid Mechelen ZIP / Postal Code: 2800Belgium Telephone: (32-15) 479 100 Fax: (32-15) 275 686
BELIZE	**Tampa (Office in U.S.A.)**	Cummins Power South, LLC 5421 N. 59th Street Tampa, FL 33610 Telephone: (813) 621-7202 Fax: (813) 621-8250

BENIN		- See Togo
BENIN	**TOGOMAT s.a.**	Zone Industrielle CNPPME Lome Togo Telephone: (228) 2272395 Fax: (228) 2270310
BERMUDA	**Bronx (Office in U.S.A.)**	Cummins Metropower, Inc. 890 Zerega Avenue Bronx, NY 10473 Telephone: (718) 892-2400 Fax: (718) 892-0055
BHUTAN	**Pune (Office in India)**	Cummins Diesel Sales & Service (India) Ltd 35A/1/2, Erandawana Pune, Maharashtra 411038 India Telephone: (91-20) 25431234 / 25430666 25431703 Fax: (91-20) 25439490
BOTSWANA **- See Southern Africa Regional Office - Kelvin**	**Cummins Diesel South Africa (Pty)**	9 Impala Road Kelvin (Neighbourhood), Alexandra Gauteng, South Africa 2054 South Africa Telephone: (27-11) 321 8800 Fax: (27-11) 444 3254
BRAZIL	**Belo Horizonte**	Distribuidora Cummins Minas Ltda. Anel Rodoviario, Km 01 - Bairro Olhos D'Agua Norte Belo Horizonte, Minas Gerais 31950 Brazil Telephone: (55-31) 3288-1344 Fax: (55-31) 3288-1141
BRAZIL	**Campo Grande**	Cummins Distribuidora de Motores Diesel e Equipamentos Ltda. Av. Rod. BR 163, nr. 5185 Campo Grande, MATO GROSSO DO SUL 79060 Brazil Telephone: (55-67) 387-8707 Fax: (55-67) 387-8707
BRAZIL	**Curitiba**	Distribuidora Parana de Motores Cummins Ltda. Abel Scuissiato 3020, Bairro Atuba Curitiba, PARANA 83408 Brazil Telephone: (55-41) 3675-4500 Fax: (55-41) 3675-6077
BRAZIL	**Fortaleza**	Distribuidora Cummins Diesel do Nordeste Ltda BR 116, km.10 - nr.10.001, Messejana Fortaleza, CEARA ZIP / Postal Code: 60871 Brazil Telephone: (55-85) 4011-6400 Fax: (55-85) 4011-6400

BRAZIL	**Goianian**	Distribuidora Cummins Centro Oeste Ltda. Centro Oeste Ltda. Av. Caiapo , 777 Bairro Santa Genoveva Goiania, GOIAS 74672 Brazil Telephone: (55-62) 269-1010 / 1011 Fax: (55-62) 269-1032 / 1021
BRAZIL	**Manaus**	Powertech Comercial Ltda. Av. Efigenio Sales 1717 - Parque 10 Estrada da Ponta Negra, 6080 - Sao Manaus, AMAZONAS 69060 Brazil Telephone: (55-92) 642-2014 Fax: (55-92) 236-6711
BRAZIL	**Porto Alegre**	Distribuidora Meridional Motores Cummins Ltda. Av. Assis Brasil , 9000 Sarandi Porto Alegre, RIO GRANDE DO SUL 91140 Brazil Telephone: (55-51) 3021-2288 Fax: (55-51) 3364-2288
BRAZIL	**Rio de Janeiro**	Cummins Distribuidora de Motores Diesel e Equipamentos Ltda. Av. Brasil, 20289 Botafogo Rio de Janeiro, RIO DE JANEIRO 21515 Brazil Telephone: (55-21) 2196-3131 Fax: (55-21) 2196-3121
BRAZIL	**Sao Paulo**	Cummins Distribuidora de Motores Diesel e Equipamentos Ltda. Rua Coronel Euclides Machado, 52 Freguesia do O Sao Paulo, SAO PAULO 02713 Brazil Telephone: (55-11) 3931-2900 Fax: (55-11) 3931-2900
BRITISH VIRGIN ISLANDS		- See Puerto Rico
BRITISH VIRGIN ISLANDS	**Cummins de Puerto Rico, Inc.**	Calle 1 G1 Urb. Industrial, Barrio Palmas Cataño 00962 Puerto Rico Telephone: (787) 275-2000 Fax: (787) 275-2030
BRUNEI		- See Malaysia
BRUNEI	**Scott & English (M) Sdn Bhd**	12 Jalan U1/15, Seksyen U1 Hicom-Glenmarie Industrial Park Shah Alam, Selangor Darul Ehsan 40150 Malaysia Telephone: (60-3) 7805-1111 Fax: (60-3) 7803-5122
BURKINA - FASO		- See North/West/East and Central Africa Regional Office - Daventry

BURKINA - FASO	**Cummins Engine Company Ltd**	Royal Oak Way South Daventry, Northants ZIP / Postal Code: NN11 5NU United Kingdom Telephone: (44-1327) 886000 Fax: (44-1327) 886106
BULGARIA		-See Germany Regional Office - Gross-Gerau
BULGARIA	**Cummins Diesel Deutschland GmbH**	Odenwaldstraße 23 Groß-Gerau, Hessen 64521 Germany Telephone: (49-6152) 174-0 Fax: (49-6152) 174-141
BURMA	**Kuala Lumpur (Office In Malaysia)**	Scott & English (M) Sdn Bhd 12 Jalan U1/15, Seksyen U1 Hicom-Glenmarie Industrial Park Shah Alam, Selangor Darul Ehsan 40150 Malaysia Telephone: (60-3) 7805-1111 Fax: (60-3) 7803-5122
BURUNDI	**Brussels (Office in Belgium)**	Cummins Belgium N.V./S.A. Egide Walschaertsstraat, 2 Industriepark Zuid Mechelen 2800 Belgium Telephone: (32-15) 479 100 Fax: (32-15) 275 686
CAMBODIA		Scott & English (Cambodia) Ltd. No. 20A E0/E1 Russian Boulevard Phnom Penh Cambodia Telephone: (855-23) 723741 Fax: (855-23) 723741
CANARY ISLANDS	**Madrid (Office in Spain)**	Cummins Ventas y Servico S. A. Torrelaguna 56 Madrid 28027 Spain Telephone: (34-91) 367 20 00 / 367 24 04 Fax: (34-91) 407 66 04
CAPE VERDE		- See ECV Portugal Electro Central Vulcanizadora, Lda Rua Conselheiro Martins de Carvalho Lote 1480 Restelo Lisbon ZIP / Postal Code: 1400 Portugal Telephone: (351-21) 3034800 Fax: (351-21) 3034801 / 2
CENTRAL AFRICAN REPUBLIC		- See North/West Africa Regional Office - Daventry Cummins Engine Company Ltd Royal Oak Way South Daventry, Northants NN11 5NU United Kingdom Telephone: (44-1327) 886000 Fax: (44-1327) 886106

CHAD		- See North/West/East and Central Africa Regional Office - Daventry Cummins Engine Company Ltd Royal Oak Way South Daventry, Northants NN11 5NU United Kingdom Telephone: (44-1327) 886000 Fax: (44-1327) 886106
CHILE	**Santiago**	Distribuidora Cummins Chile, S.A. Avda. Americo Vespucio # 0631 Santiago, Quilicura ZIP / Postal Code: 873-0596 Chile Telephone: (56-2) 655-7253 / 7245 Fax: (56-2) 655-7216 / 7436
CHINA, PEOPLE'S REPUBLIC	**Beijing**	Cummins Engine (Beijing) Co., Ltd. No. 8, Wan Yuan Street Beijing Economic and Technology Development Zone Beijing, 100176 People's Republic of China Telephone: (86-10) 67882258 Fax: (86-10) 67882285
CHINA, PEOPLE'S REPUBLIC	**Shenyang**	Cummins Engine (China) Investment Co., Ltd. ShenYang Workshop & Branch Office No.5-2 Seventh Street Shenyang Economic-Technological Development Area Shenyang, Liaoning 110141 China Telephone: (86-24) 25506611 Fax: (86-24) 25365599
CHINA, PEOPLE'S REPUBLIC	**Kunming**	Cummins (China) Investment Co. Ltd. Kunming Branch Room 606, Hongta Mansion No.155 Beijing Road Kunming, Yunnan 650011 Telephone: (86-871) 3579471/511/579/958 Fax: (86-871) 3579210
CHINA, PEOPLE'S REPUBLIC	**Shanghai**	Cummins (China) Investment Co., Ltd. Shanghai Distributor Branch No. 581, New jin Qiao Road Pu Dong New Area Shanghai, Shanghai 201206 China Telephone: (86-21) 50318966 Fax: (86-21) 50318528
CHINA, PEOPLE'S REPUBLIC	**Urumqi**	Cummins Engine (China) Investment Co., Ltd Urumqi Branch No.7,Shanghai Rd. Urumqi, Xinjiang 830011 China Telephone: (86-991) 3780332/5/6/7/8/9 Fax: (86-991) 3780334

CHINA, PEOPLE'S REPUBLIC	**Wuhan**	Cummins Engine (China) Investment Co., Ltd. Wuhan Branch No.2 Zhang Po Road, Dong Xi Hu District A-Kaili Commercial Building Wuhan, Hubei 430040 China Telephone: (86-27) 83081677 Fax: (86-27) 83259369 / 83259370
CHINA, PEOPLE'S REPUBLIC	**Guangzhou**	Cummins (China) Investment Co., Ltd. Guangzhou Branch G/F, Unit 1 & 2, Block 5, Xing Hui Yuan NO. 46, Jinsui Road, Zhu Jiang New City, Guangzhou, Guangdong 510623 China Telephone: (86-20) 38621009 Fax: (86-20) 38621144
CHINA, PEOPLE'S REPUBLIC	**Shenzhen**	Shenzhen Chongfa Cummins Engine Company Ltd. Tian An Che Gong Miao Industrial Estate, Unit F2.6 - 2D Shenzhen Shennan Da Dao Shenzhen, Guangdong 518040 China Telephone: (86-755) 83415479 Fax: (86-755) 83415480
COLOMBIA	**Barranquilla**	Cummins de Colombia, S.A. Calle 65 (Avenida Murillo) #6-31 Diagonal a Gran Abastos Soledad, Atlantico Colombia Telephone: (57-53) 282600 / 282601 / 282602 / 282603 / 282604 Fax: (57-53) 282640 / 282641
COLOMBIA	**Bogota**	Cummins de los Andes S.A. Avenida Ciudad de Cali No. 11-22 Location: Bogota, Cundinamarca Colombia Telephone: (57-1) 294-8444 Fax: (57-1) 2294-8431
COLOMBIA	**Bucaramanga**	Cummins API Ltda. Kilómetro 7 Vía a Girón - Zona Industrial A.A. 1821 Bucaramanga, Colombia Bucaramanga, Santander Colombia Telephone: (57-76) 468060 / 469262 / 469263 Fax: (57-76) 468065
COLOMBIA	**Cali**	Tecnodiesel Limitada Apartado Aereo No. 6398 Carrera 8, No. 27-43 Cali, Valle Colombia Telephone: (57-2) 442-2422 Fax: (57-2) 442-1798

COLOMBIA	**Medellin**	Equitel Carrera 52, # 10-184 Medellin, Antioquia Colombia Telephone: (57-4) 255-4200 Fax: (57-4) 255-4104
COLOMBIA	**Pereira**	Tecnodiesel Limitada Carrera 16 No. 9 - 68 Avenida Simon Bolivar, Dosquebradas Pereira, Risaralda Colombia Telephone: (57-63) 306102 Fax: (57-63) 300062
COMOROS		- See Southern Africa Regional Office - Kelvin
COMOROS		Cummins Diesel South Africa (Pty) Ltd 9 Impala Road Kelvin (Neighbourhood), Alexandra Gauteng, South Africa 2054 South Africa Telephone: (27-11) 321 8800 Fax: (27-11) 444 3254
CONGO, PEOPLE'S REPUBLIC	**Mechelen (Office in Belgium)**	Cummins Belgium N.V./S.A. Egide Walschaertsstraat, 2 Industriepark Zuid Mechelen 2800 Belgium Telephone: (32-15) 479 100 Fax: (32-15) 275 686
CORSICA		- See France (Please contact) Cummins Diesel S.A. 39 rue Ampère BP 190 Chassieu cédex 69680 Telephone: (33-4) 479 100 Fax: (33-4) 78 90 19 56
COSTA RICA	**San Jose**	Oficina Regional Cummins de Centro America Urbanización Rincón Verde Dos Casa 13E San Pablo de Heredía Costa Rica Telephone: (506) 238-1160 Fax: (506) 238-1108
CYPRUS	**Nicosia**	Alexander Dimitriou & Sons Limited 158 Limassol Ave Latsia Nicosia CY-2235 Cyprus Telephone: (357-22) 715 300 Fax: (357-22) 715 400

CZECH REPUBLIC		- See Central & Eastern Europe Cummins Czech Republic s.r.o. Komercni zona Pruhonice Cestlice Obchodni 132 Praha, Prague 251 01 Czech Republic Telephone: (420-272) 680 110 Fax: (420-272) 680 090
DENMARK	**Glostrup**	Cummins Diesel Salg & Service A/S Hovedvejen 233B, Osted Roskilde 4000 Denmark Telephone: (45-46) 42 35 50 Fax: (45-46) 42 30 50
DJIBOUTI		- See North/West/East and Central Africa
DJIBOUTI		Cummins Engine Company Ltd Royal Oak Way South Daventry, Northants ZIP / Postal Code: NN11 5NU United Kingdom Telephone: (44-1327) 886000 Fax: (44-1327) 886106
DOMINICAN REPUBLIC	**Santo Domingo**	Argico C. por A. Calle Jose A. Soler No.3 Esq. Lope de Vega Santo Domingo, Distrito Nacional Dominican Republic Telephone: (809) 562-6281 Fax: (809) 562-4233
DUBAI		- See United Arab Emirates
DUBAI		Cummins Middle East FZE P.O. Box No 17636, Units ZF 05 & 06 Jebel Ali Free Zone, Dubai United Arab Emirates Telephone: (00 9714) 8838998 Fax: (00 9714) 8838997
DUBAI	**United Arab Emirates**	Cummins Emirates Sales & Service LLC P.O. Box No 54044 United Arab Emirates Telephone: (00 9714) 3478184 Fax: (00 9714) 3478185 Toll Free: (800) 4184
ECUADOR	**Guayaquil**	Indusur S.A. Ave. Carlos Julio Arosemena Km. 4 Guayaquil, Guayas Ecuador Telephone: (593-4) 220-1177 / 220-0655 Fax: (593-4) 220-1052
ECUADOR	**Quito**	Rectificadora Botar S.A. Av. 10 de Agosto # 5980 Quito, Pichincha Ecuador Telephone: (593-2) 2265-177 / 2265-209 / 2265-225 / 2265-193 Fax: (593-2) 2459-031

EGYPT	**Cairo**	Egyptian International Motors CO. Ltd (EIM) Autostrade Road Al-Mugattam, Cairo Egypt Telephone: (20-2) 5061600 / 1 / 2 Fax: (20-2) 5065620
EL SALVADOR	**San Salvador**	Maquinaria Salvadoreña, S.A. de C.V. Blvd. Ejercito Nacional y 54 Ave. Norte Edificio MAQSA San Salvador El Salvador El Salvador Telephone: (503) 2293-1666 Fax: (503) 2293-1656
ENGLAND		- See United Kingdom
ENGLAND		Cummins UK Rutherford Drive Park Farm South Wellingborough, Northants ZIP / Postal Code: NN8 6AN United Kingdom Telephone: (44-1933) 334200 Fax: (44-1933) 334198
EQUATORIAL GUINEA		- See North/West/East and Central Africa Regional Office - Daventry
EQUATORIAL GUINEA		Cummins Engine Company Ltd Royal Oak Way South Daventry, Northants ZIP / Postal Code: NN11 5NU United Kingdom Telephone: (44-1327) 886000 Fax: (44-1327) 886106
ESTONIA		Cummins Czech Republic s.r.o. Komercni zona Pruhonice Cestlice Obchodni 132 Praha, Prague 251 01 Czech Republic Telephone: (420-272) 680 110 Fax: (420-272) 680 090
FAROE ISLANDS	**Wellingborough (Office in United Kingdom)**	Cummins UK Rutherford Drive Park Farm South Wellingborough, Northants NN8 6AN England Telephone: (44-1933) 334200 Fax: (44-1933) 334198
FERNANDO PO		- See Spain
FERNANDO PO		Cummins Ventas y Servico S. A. Torrelaguna 56 Madrid 28027 Spain Telephone: (34-91) 367 20 00 / 367 24 04 Fax: (34-91) 407 66 04
FIJI		- See Cummins New Zealand

FIJI		Cummins 9 Langley Road Manukau City Centre, Auckland 1702 New Zealand Telephone: (64-3) 277 1000 Fax: (64-3) 277 1001
FINLAND	**Helsinki**	Machinery Oy Ansatie 5 Vantaa ZIP / Postal Code: FIN-01741 Finland Telephone: (358-9) 89551
FRANCE	**Lyon**	CUMMINS DIESEL S.A. 39 rue Ampère BP 190 Chassieu cédex 69680 France Telephone: (33-4) 72 22 92 72 Fax: (33-4) 78 90 19 56
GABON		- See North/West/East and Central Africa Regional Office - Daventry
GAMBIA		Matforce 10 Avenue Faidherbe Dakar Senegal Telephone: (221-8) 399500 Fax: (221-8) 399531 / 399550
GEORGIA		- See Moscow Regional Office - Moscow
GEORGIA		Cummins Engine Company, Inc. Park Place Office E708, 113/1 Leninskiy Prospect Moscow ZIP / Postal Code: 117198 Russia Telephone: (7-495) 956-51-22 / 23 Fax: (7-495) 956-53-62
GERMANY	**Gross-Gerau**	Cummins Diesel Deutschland GmbH Odenwaldstraße 23 Groß-Gerau, Hessen 64521 Germany Telephone: (49-6152) 174-0 Fax: (49-6152) 174-141
GHANA	**Accra**	J&D Diesels and Systems P.O. Box c2381 Cantonments Accra, Ghana Telephone: (233-21) 30-14-51 Fax: (233-21) 301 201
GREECE	**Athens**	ERGOTRAK Industrial Machinery & Equipment Trading Company 14 km. National Road of Athens-Lamia Kifissia 14510 Greece Telephone: (30-210) 6293400 / 41 Fax: (30-210) 6201845

GREENLAND		- See Denmark Cummins Diesel Salg & Service A/S Hovedvejen 233B, Osted Roskilde 4000 Denmark Telephone: (45-46) 42 35 50 Fax: (45-46) 42 30 50
GRENADA	**Miami (Office in U.S.A.)**	Cummins Power South, LLC 9900 N W 77th Ave. Hialeah Gardens, Florida 33016 Telephone: (305) 821-4200 Fax: (305) 557-2992
GUADELOUPE	**Miami (Office in U.S.A.)**	Cummins Power South, LLC 9900 N W 77th Ave. Hialeah Gardens, Florida 33016 Telephone: (305) 821-4200 Fax: (305) 557-2992
GUAM	**Barrigada**	Mid-Pac Far East, Inc. Airport Industrial Park 825 Tiyan Parkway Barrigada, Guam 96931 Telephone: (671) 632-5160 Fax: (671) 632-5186
GUATEMALA	**Guatemala City**	Maquinaria y Equipos, S.A. Carretera a Amatitlan, Kilómetro 12, Zona 12, Guatemala City Guatemala Guatemala Telephone: (502) 2477-2746 / 2477-2747 / 2477-2748 / 2477-2749 / 2477-2750 Fax: (502) 2477-3929
GUINEA	**Mechelen (Office in Belgium)**	Cummins Belgium N.V./S.A. Egide Walschaertsstraat, 2 Industriepark Zuid Mechelen 2800 Belgium Telephone: (32-15) 479 100 Fax: (32-15) 275 686
GUINEA BISSAU		- See North/West/East and Central Africa Regional Office - Daventry Cummins Engine Company Ltd Royal Oak Way South Daventry, Northants NN11 5NU United Kingdom Telephone: (44-1327) 886000 Fax: (44-1327) 886106
GUYANA	**Miami (Office in U.S.A.)**	Cummins Power South, LLC 9900 N.W. 77 Court Hialeah Gardens, FL 33016 Telephone: (305) 821-4200 Fax: (305) 557-2992

GUYANA, FRENCH	**See France**	CUMMINS DIESEL S.A. 39 rue Ampère BP 190 Chassieu cédex 69680 France Telephone: (33-4) 72 22 92 72 Fax: (33-4) 78 90 19 56
HAITI	**Miami (Office in U.S.A.)**	Cummins Power South, LLC 9900 N W 77th Ave. Hialeah Gardens, FL 33016 Telephone: (305) 821-4200 Fax: (305) 557-2992
HOLLAND	**- See Netherlands**	Cummins Holland B V Galvanistraat 35 Dordrecht, Zuid-Holland 3316 GH Netherlands Telephone: (31-78) 6181200 Fax: (31-78) 6176579
HONDURAS	**Tegucigalpa**	Comercial Laeisz Honduras, S.A. Desvio Colonia La Pradera, Blvd. Toncontin Tegucigalpa Honduras Telephone: (504) 233-5615 / 234-7072 Fax: (504) 233-9531 / 234-3718
HONG KONG	**Kowloon**	Cummins Hong Kong Ltd. 2/F Unison Industrial Centre 27-31 Au Pui Wan Street, Fo Tan, Shatin, N.T. Hong Kong, Hong Kong Hong Kong S.A.R.ong Kong Telephone: (852) 2606-5678 Fax: (852) 2691-1641
ICELAND	**Velasalan H.F.**	Ananaustrum 1 Reykjavik 121 Iceland Telephone: (354) 5526122 Fax: (354) 580 5301
INDIA	**Pune**	Cummins Diesel Sales & Service (India) Ltd 35A/1/2, Erandawana Pune, Maharashtra 411038 Telephone: (91-20)25431234 , 25430666, 25431703 Fax: (91-20) 25439490
INDIA	**Kolkata**	Cummins Diesel Sales & Service (India) Ltd 94, Tivoli Court, 1/C Ballygunge Circular Road Kolkata, West Bengal 700019 India Telephone: (91-33) 22472481 / 22470774 / 22478065 Fax: (91-33) 22473833

INDIA	**New Delhi**	Cummins Diesel Sales & Service (India) Ltd. 911-912, Hemkunt Tower, 98 Nehru Place New Delhi, Delhi 110019 India Telephone: (91-11) 26431051 / 26445756 / 26445759 / 26416947 Fax: (91-11) 26212817
INDIA	**Raipur**	Cummins Diesel Sales & Service (India) Ltd. Vanijya Bhavan' 1st Floor, Sai Nagar Fafadih Devendra Nagar Road Raipur, Madhya Pradesh 492009 India Telephone: (91-771) 2521101 / 2521102 Fax: (91-771) 2521103
INDIA	**Ranchi**	Cummins Diesel Sales & Service (India) Ltd. `Shanti Kunj' C-202, Vidyalaya Marg Road No. 01, Ashok Nagar, Ranchi, Jharkhand 834002 India Telephone: (91-651) 2241948 / 2241521 Fax: (91-651) 2242815
INDONESIA	**Jakarta**	P.T. Alltrak 1978 J1. R.S.C. Veteran No. 4 Bintaro, Rempoa Jakarta 12330 Indonesia Telephone: (62-21) 736-1978 / 3301 / 5085 Fax: (62-21) 736-1977 / 3302
IRAQ		- See Middle East Regional Office or United Arab Emirates
IRAQ		Cummins Emirates Sales & Service LLC P.O. Box No 54044 Al Quoz Industrial Estate, Dubai United Arab Emirates Telephone: 00 9714 3478184 Fax: 00 9714 3478185 Toll Free: 800 4184
IRELAND	**Wellingborough (Office in England)**	Cummins UK Rutherford Drive Park Farm South Wellingborough, Northants NN8 6AN United Kingdom Telephone: (44-1933) 334200 Fax: (44-1933) 334198
ISRAEL	**Tel Aviv**	Israel Engines & Trailers 33 Hahashmal Street Tel Aviv 61003 Israel Telephone: (972-3) 7106222 Fax: (972-3) 5604540

ITALY	**Milan**	Cummins Italia S.p.A. Via Einaudi, 5 Peschiera Borromeo, Milano 20068 Italy Telephone: (39-02) 51 65 581 Fax: (39-02) 51 65 58 56
IVORY COAST		- See Cote d' Ivoire Ste. des Ets. Lemercier et Fils 10 rue des Brasseurs Abidjan 15 Cote d'Ivoire Cote d'Ivoire Telephone: (225-21) 352522 / 350687 / 350676 Fax: (225-21) 358562 / 243938
JAMAICA		Cummins Power South, LLC 9900 N W 77th Ave. Hialeah Gardens, FL 33016 Telephone: (305) 821-4200 Fax: (305) 557-2992
JAPAN	**Tokyo**	Cummins Japan Ltd. 2-11, Higashi-Kojiya 6-chome Ota-ku, Tokyo 144-0033 Japan Telephone: (81-3) 5735-0600 Fax: (81-3) 5735-0605
JORDAN	**Amman**	SETI Jordan Ltd. Bayader Wadi Alseer Industrial Street Amman, Jordan Jordan Telephone: (962-6) 582 7300 / 4261 Fax: (962-6) 585 6854
KENYA	**Nairobi**	Simba Colt Motors Ltd Cummins Engine Division, PO Box 48296, Code 00100 Shimo-La-Tewa Road, Nairobi Kenya Telephone: (254-20) 650029 Fax: (254-20) 534870
KOREA - SOUTH KOREA	**Seoul**	Cummins Diesel Sales & Service Co., Ltd. 354-4, Chonheung-ri, Songgo-eup Chonan-city, Choongchungnam-do 330-836 South Korea Telephone: (82-41) 620-9202/3 Fax: (82-41) 621-9121 to 2
KOREA - SOUTH KOREA		Cummins Korea Ltd 2nd Floor, Choyang Bldg. 113 Samsung Dong, Kangnam-ku Seoul, Korea Telephone: (82-2) 3420-0901 Fax: (82-2) 3452-4113 / 539-6569

KUWAIT	**Kuwait**	General Transportation & Equipment Co. (GTE) (Sales Department) Safat 13011 Kuwait Telephone: (965) 483 3380/1/2 Fax: (965) 481 2860
LAOS		Diethelm & Co. Ltd Ban Phonsinouan, Unit 18, New Road Sisattanak District, Vientiane Laos P.D.R. Telephone: (856-21) 453 100 Fax: (856-21) 453-103
LATVIA	**Please contact the Central & Eastern European Regional Office**	Cummins Diesel Deutschland GmbH Odenwaldstraße 23 Groß-Gerau ZIP / Postal Code: 64521 Germany Telephone: (49-6152) 174-0 Fax: (49-6152) 174-141
LEBANON	**Beirut**	S.E.T.I. Charles Keller SAL Corniche du Fleuve Beirut Lebanon Lebanon Telephone: (961-1) 425040 / 425041 / 426042 Fax: (961-1) 425637 / 425389
LESOTHO	**- See South Africa**	Cummins Diesel South Africa (Pty) Ltd 13 Eastern Service Road Kelvin (Neighbourhood), Alexandra Gauteng, South Africa 2054 South Africa Telephone: (27-11) 321 8700 Fax: (27-11) 444 2012
LIBYA	**- See North/West Africa Regional Office - Daventry**	Cummins Engine Company Ltd Royal Oak Way South Daventry, Northants NN11 5NU United Kingdom Telephone: (44-1327) 886000 Fax: (44-1327) 886106
LIECHTENSTEIN	**- See Switzerland**	AKSA Wurenlos AG Grosszelgstrasse 15 Wuerenlos CH-5436 Switzerland Telephone: (41-56) 436 77 00 Fax: (41-56) 436 77 19
LUXEMBOURG		Cummins Diesel Deutschland GmbH Odenwaldstraße 23 Groß-Gerau, Hessen 64521 Germany Telephone: (49-6152) 174-0 Fax: (49-6152) 174-141

MACAU	**- See Hong Kong**	Cummins Hong Kong Ltd. 2/F Unison Industrial Centre 27-31 Au Pui Wan Street, Fo Tan, Shatin, N.T.cccc Hong Kong, Hong Kong Hong Kong S.A.R. Telephone: (852) 2606-5678 Fax: (852) 2691-1641
MADAGASCAR	**- See Southern Africa Regional Office**	Cummins Diesel South Africa (Pty) Ltd 13 Eastern Service Road Kelvin (Neighbourhood), Alexandra Gauteng, South Africa 2054 ZIP South Africa Telephone: (27-11) 321 8700 Fax: (27-11) 444 2012
MADEIRA ISLANDS	**- See Portugal**	Electro Central Vulcanizadora, Lda Rua Conselheiro Martins de Carvalho Lote 1480 Restelo Lisbon 1400 Portugal Telephone: (351-21) 3034800 Fax: (351-21) 3034801 / 2
MALAYSIA	**Kuala Lumpur**	Scott & English (M) Sdn Bhd 12 Jalan U1/15, Seksyen U1 Hicom-Glenmarie Industrial Park Shah Alam, Selangor Darul Ehsan 40150 Malaysia Telephone: (60-3) 7805-1111 Fax: (60-3) 7803-5122
MALI	**- See Senegal (Matforce)**	Matforce 10 Avenue Faidherbe Dakar Senegal Telephone: (221-8) 399500 Fax: (221-8) 399531 / 399550
MALTA	**Valletta**	International Machinery Ltd Regency House 254 Republic Street Valletta, Malta Malta Telephone: (356-21) 232620 / 233343 Fax: (356-21) 235484 / 247571
MARTINIQUE		Cummins Power South, LLC 9900 N.W. 77 Ave. Hialeah Gardens, FL 33016 Telephone: (305) 821-4200 Fax: (305) 557-2992
MEXICO	**Guadalajara**	Distribuidora Megamak de Occidente Metalurgia No. 2980 Fracc. Alamo Industrial Guadalajara, Jalisco 45560 Mexico Telephone: (52-3) 666-0329 / 666-0383 Fax: (52-3) 666-0333

MEXICO	**Monterrey**	Converto Dexel Monterrey Privada Nazry Hasbun #2, Carr. Migue Aleman 14.8 Parque Industrial Hasna Apodaca, Nuevo León 66473 Mexico Telephone: (52-81) 81310200 Fax: (52-81) 81310200
MEXICO	**Merida**	Distribuidora Megamak del Sureste Av. Aviacion Civil No. 647 Col. Sambula Merida, Yucatan 97259 Mexico Telephone: (52-9) 930-1300 Fax: (52-9) 930-1315
MEXICO	**Puebla**	Cummins De Oriente, S.A. de C.V. Km. 10 + 400 Carr. Fed. Puegla-Tlaxcala Puebla, Puebla 72100 Mexico Telephone: (52-2) 248-7674 / 5 / 30-5083 / 6 Fax: (52-2) 249-7679
MEXICO	**Queretaro**	Converto Dexel Queretaro Blvd. Bernardo Quintana No. 518, Col. Arboledas Queretaro, Queretaro ZIP / Postal Code: 76140 Mexico Telephone: (52-442) 211-8700 Fax: (52-442) 211-8700
MOROCCO	**Casablanca**	Groupe Auto Hall 44 avenue Lalla Yacout Casablanca Morocco Telephone: (212-22) 442121 / 317044 / 317052 Fax: (212-22) 318915 / 315633
MOZAMBIQUE	**- See Southern Africa Regional Office - Kelvin**	Cummins Diesel South Africa (Pty) Ltd 13 Eastern Service Road Kelvin (Neighbourhood), Alexandra Gauteng, South Africa 2054 South Africa Telephone: (27-11) 321 8700 Fax: (27-11) 444 2012
NEPAL	**Pune (Office in India)**	Cummins Diesel Sales & Service (India) Ltd. 35A/1/2, Erandawana Pune, Maharashtra 411038 India Telephone: (91-20) 25431234 / 25430666 / 25431703 Fax: (91-20) 25439490
NETHERLANDS	**Dordrecht**	Cummins Holland B V Galvanistraat 35 Dordrecht, Zuid-Holland 3316 GH Netherlands Telephone: (31-78) 6181200 Fax: (31-78) 6176579

NETHERLANDS ANTILLES		Cummins Power South, LLC 9900 N W 77th Ave. Hialeah Gardens, FL 33016 Telephone: (305) 821-4200 Fax: (305) 557-2992
NEW GUINEA	**- See Papua New Guinea**	Cummins Macdhui Street Lae Papua New Guinea Telephone: (675) 472 3699 Fax: (675) 472 3803
NEW GUINEA	**- See Papua New Guinea**	Cummins Macdhui Street Lae Papua New Guinea Telephone: (675) 472 3699 Fax: (675) 472 3803
New Zealand	**Auckland**	Cummins 9 Langley Road Manukau City Centre, South Auckland 1702 New Zealand Telephone: (64-9) 277 1000 Fax: (64-9) 277 1001
New Zealand	**Christchurch**	Cummins 33 Parkhouse Road Christchurch New Zealand Telephone: (64-3) 348 8170 Fax: (64-3) 348 8007
New Zealand	**Dunedin**	Cummins 8 Devon Street Dunedin New Zealand Telephone: (64-3) 477 8818 Fax: (64-3) 477 8061
New Zealand	**Palmerston North**	Cummins 852 - 860 Tremaine Avenue Palmerston North, Wanganui-Manawatu 5301 New Zealand Telephone: (64-3) 356 2209 Fax: (64-3) 356 9130
New Zealand	**Rotorua**	Cummins 328 Te Ngae Road Bay of Plenty Rotorua New Zealand Telephone: (64-7) 345 6699 Fax: (64-7) 345 6694
NICARAGUA	**Managua**	F. Alf. Pellas, S.A. Gadala Maria Cuatro Cuadras Oeste Barrio Acahualinca Managua, Nicaragua Nicaragua Telephone: (505) 268-2244 Fax: (505) 266-1060

NIGERIA	**Lagos**	Scoa Power (A Division of Scoa Nigeria Plc) 15, Creek Road Apapa Lagos Nigeria Telephone: (234-1) 5873623 / 5877322 Fax: (234-1) 5450646
NIGERIA	**Paris (Office in France)**	SCOA Inter Immeublearie Josephe Rue du Marechal de Lattre de Tassigny 78990 Elancourt, France France Telephone: (33-1) 30 688 268 Fax: (33-1) 30 688 269
NORTHERN IRELAND	**- See United Kingdom**	Cummins Engine Company Ltd Royal Oak Way South Daventry, Northants ZIP / Postal Code: NN11 5NU United Kingdom Telephone: (44-1327) 886000 Fax: (44-1327) 886106
NORWAY	**Oslo**	Cummins Norway A S Hestehagen 3 Postboks 151 Drobak 1441 Norway Telephone: (47) 64 90 70 80 Fax: (47) 64 90 70 90
OMAN	**Ruwi**	Universal Engineering Services LLC PO Box 2688 Ruwi 112 Oman Telephone: (968) 597531 / 597537 Fax: (968) 597514
PAKISTAN	**Karachi**	Cummins Sales & Service Pakistan 2 Bangalore Town Main Shahrah-e-Faisal Karachi 75350 Pakistan Telephone: +92-21-4539603 / 4539604/ 4539605 Fax: +92-21-4532519
PANAMA	**Panama City**	Grupo Tiesa, S.A. Via Transistmica Milla 8 Frente a Bacardi Partillo Panama Panama Telephone: (507) 231-0266 Fax: (507) 231-2535
PARAGUAY	**Asuncion**	De La Sobera S.A. Eusebio Ayala 1947 P.O. Box 1160 Asuncion Paraguay Telephone: (595) 21 202 913

PERU	**Lima**	Mitsui Maquinarias Peru, S.A. Av. Nicolas Ayllon 2648 Parcela Rustica Sta. Angelica Ate Lima ZIP / Postal Code: 03 Peru Telephone: (51-1) 326-4957 Fax: (51-1) 326-4954
PHILIPPINES	**EDSA**	Cummins Sales & Service Philippines, Inc. Lot 1 & 2, Block 15, LIIP Avenue, Laguna International Industrial Park, Mamplasan, Binan Laguna Philippines Telephone: (63-2) 843-0630 Fax: (63-2) 539-0290
POLAND		Cummins Engine Company Limited Sp. z.o.o. Oddzial w Polsce ul. Stawowa 119 Krakow 31-346 Poland Telephone: (48-12) 661 53 05 & (48-12) 661 53 25 Fax: (48-12) 661 53 15
PORTUGAL	**Lisbon**	Electro Central Vulcanizadora, Lda Rua Conselheiro Martins de Carvalho Lisbon ZIP / Postal Code: 1400 Portugal Telephone: (351-21) 3034800 Fax: (351-21) 3034801 / 2
QATAR	**Doha**	Jaidah Motors & Trading Co. P.O. Box 150 Doha, Qatar (Arabian Gulf) Telephone: (974) 4466888 Fax: (974) 441 4100 / 441 5400
REUNION	**- See Lyon Regional Office - Lyon**	CUMMINS DIESEL S.A. 39 rue Ampère BP 190 Chassieu cédex 69680 France Telephone: (33-4) 72 22 92 72 Fax: (33-4) 78 90 19 56
RIO DE ORO	**- See Spain**	Cummins Ventas y Servico S. A. Torrelaguna 56 Madrid 28027 Spain Telephone: (34-91) 367 20 00 / 367 24 04 Fax: (34-91) 407 66 04
ROMANIA	**- See Germany Regional Office - Gross-Gerau**	Cummins Diesel Deutschland GmbH Odenwaldstraße 23 Groß-Gerau, Hessen 64521 Germany Telephone: (49-6152) 174-0 Fax: (49-6152) 174-141

RUSSIA		OOO Cummins Klyazma 1G Khimki Disctrict, Moscow Region 141400 Russia Telephone: (7-495) 540 86 24 / 25 Fax: (7-495) 540 86 99
RWANDA	**Mechelen**	Cummins Belgium N.V./S.A. Egide Walschaertsstraat, 2 Industriepark Zuid Mechelen 2800 Belgium Telephone: (32-15) 479 100 Fax: (32-15)275 686
ST. LUCIA		Cummins Power South, LLC 9900 N W 77th Ave. Hialeah Gardens, FL 33016 Telephone: (305) 821-4200 Fax: (305) 557-2992
ST. LUCIA	**Miami (Office in U.S.A.)**	Cummins Power South, LLC 9900 N W 77th Ave. Hialeah Gardens, FL 33016 Telephone: (305) 821-4200 Fax: (305) 557-2992
SAN MARINO	**- See Italy**	Cummins Italia S.p.A. ItalyVia Einaudi, 5 Peschiera Borromeo, Milano 20068 Telephone: (39-02) 51 65 581 Fax: (39-02) 51 65 58 56
SAO TOME AND PRINCIPE	**- See North/West/East and Central Africa Regional Office - Daventry, England**	Cummins Engine Company Ltd Royal Oak Way South Daventry, Northants ZIP / Postal Code: NN11 5NU United Kingdom Telephone: (44-1327) 886000 Fax: (44-1327) 886106
SAUDI ARABIA	**Al-Khobar**	General Contracting Company - OLAYAN P.O. Box 356 King Abdul Aziz Road Al-Khobar Saudi Arabia Telephone: (966-3) 882-0888 Fax: (966-3) 8828560 / 8827914
SCOTLAND	**- See United Kingdom**	Cummins UK Rutherford Drive Park Farm South Wellingborough, Northants ZIP / Postal Code: NN8 6AN United Kingdom Telephone: (44-1933) 334200 Fax: (44-1933) 334198

SENEGAL	**Dakar**	Matforce 10 Avenue Faidherbe Dakar Senegal Telephone: (221-8) 399500 Fax: (221-8) 399531/399550 Equipements et Services (Mining Only) BP 15372-Fann Dakar Senegal Contacts: Mr. Jean Smets Tel: (221-8) 60 77 76 & 24 73 62 Fax: (221-8) 60 95 98
SEYCHELLES	**- See North/West/East & Central Africa Regional Office - Daventry, England**	Cummins Engine Company Ltd Royal Oak Way South Daventry, Northants ZIP / Postal Code: NN11 5NU United Kingdom Telephone: (44-1327) 886000 Fax: (44-1327) 886106
SIERRA LEONE	**- See North/West/East and Central Africa Regional Office - Daventry**	Cummins Engine Company Ltd Royal Oak Way South Daventry, Northants ZIP / Postal Code: NN11 5NU United Kingdom Telephone: (44-1327) 886000 Fax: (44-1327) 886106
SINGAPORE	**Singapore**	Cummins Engine (Singapore) Pte Ltd 8 Tanjong Penjuru Singapore 609019 Singapore Telephone: (65) 6261-3555 Fax: (65) 6261-2405
SLOVAKIA		- See European Regional Office - Gross-Gerau
SOLOMON ISLANDS	**The Czech branch covers sales and service for the Czech Republic and Slovakia**	Cummins Czech Republic s.r.o. Komercni zona Pruhonice Cestlice Obchodni 132 Praha, Prague 251 01 Czech Republic Telephone: (420-272) 680 110 Fax: (420-272) 680 090
SOLOMON ISLANDS	**-See SOUTH PACIFIC ISLANDS**	(Please contact) Cummins 2 Caribbean Drive Scoresby 3179 Victoria Telephone: (61-3) 9765-3222 Fax: (61-3) 9763-0079
SOMALIA	**- see Southern Africa Regional Office**	(Please contact) Cummins Diesel South Africa (Pty) Ltd 13 Eastern Service Road Kelvin (Neighbourhood), Alexandra Gauteng, South Africa 2054 South Africa Telephone: (27-11) 321 8700 Fax: (27-11) 444 2012

SOUTH AFRICA	**Johannesburg**	Cummins Diesel South Africa (Pty) Ltd 13 Eastern Service Road Kelvin (Neighbourhood), Alexandra Gauteng, South Africa 2054 South Africa Telephone: (27-11) 321 8700 Fax: (27-11) 444 2012
SOUTHWEST AFRICA	**- see Southern Africa Regional Office**	(Please contact) Cummins Diesel South Africa (Pty) Ltd 13 Eastern Service Road Kelvin (Neighbourhood), Alexandra Gauteng, South Africa 2054 South Africa Telephone: (27-11) 321 8700 Fax: (27-11) 444 2012
SPAIN	**Madrid**	Cummins Ventas y Servico S. A. Torrelaguna, 56 Madrid 28027 Spain Telephone: (34-91) 367 20 00 / 367 24 04 Fax: (34-91) 407 66 04
SPANISH GUINEA	**- See Spain**	Cummins Ventas y Servico S. A. Torrelaguna, 56 Madrid 28027 Spain Telephone: (34-91) 367 20 00 / 367 24 04 Fax: (34-91) 407 66 04
SRI LANKA	**Colombo**	Trade Promoters Ltd 272/25, Sudharshana Mawatha Malabe Sri Lanka Telephone: (94-11) 2413002 Fax: (94-11) 5550034
SUDAN	**- See Middle East Regional Office - United Arab Emirates**	United Arab Emirates Cummins Middle East FZE Units ZF 5/6 Jebel Ali Free Zone P.O.Box No 17636 Dubai United Arab Emirates Telephone: (971-4) 883 8998 Fax: (971-4) 883 7971
SURINAM		Cummins Power South, LLC 9900 N W 77th Ave. Hialeah Gardens, FL 33016 Telephone: (305) 821-4200 Fax: (305) 557-2992
SWAZILAND	**- See South Africa**	Cummins Diesel South Africa (Pty) Ltd 13 Eastern Service Road Kelvin (Neighbourhood), Alexandra Gauteng, South Africa ZIP / Postal Code: 2054 South Africa Telephone: (27-11) 321 8700 Fax: (27-11) 444 2012

SWEDEN	**Stockholm**	Cummins Sweden Maskingata 17C Brista Industriomade Märsta, Stockholm 195 60 Sweden Telephone: (46-8) 595 133 90 Fax: (46-8) 595 133 99
SWITZERLAND	**Regensdorf**	AKSA Wurenlos AG Grosszelgstrasse 15 Wuerenlos CH-5436 Switzerland Telephone: (41-1) 436 77 00 Fax: (41-56) 436 77 19
SYRIA	**Damascus**	Puzant Yacoubian & Sons Yacoubian Building Abou Baker El Saddik Street Damascus Syria Telephone: (963-11) 212 8600 Fax: (963-11) 212 8611
TAHITI, ISLAND OF	**- See French Polynesia**	Cummins MerCruiser Diesel 245 Brisbane Road Biggera Waters, Queensland 4216 Australia Telephone: (61-7) 5500 9060 Fax: (61-7) 5500 9070
TAIWAN		Cummins Taiwan Pte. Ltd. No.49 Ting Hu Road Tkuei Shan Hsiang Taoyuan, Taiwan 104 Taiwan Telephone: (886-3) 211-5160 Fax: (886-2) 211-4158
TANZANIA	**- See South African Regional Office - Kelvin, South Africa**	Cummins Diesel South Africa (Pty) Ltd 13 Eastern Service Road Kelvin (Neighbourhood), Alexandra Gauteng, South Africa ZIP / Postal Code: 2054 South Africa Telephone: (27-11) 321 8700 Fax: (27-11) 444 2012
THAILAND	**Bangkok**	DKSH (Thailand) Ltd 1696 New Petchburi Road Bangkok 10310 Thailand Telephone: (66-2) 254-4900 / 454-2173 Fax: (66-2) 253-5560 / 652-9417 / 8 / 9
TOGO (and BENIN)	**Lome**	TOGOMAT s.a. Zone Industrielle CNPPME Lome Togo Telephone: (228) 2272395 Fax: (228) 2270310

TONGA, ISLAND OF	**-See SOUTH PACIFIC ISLANDS**	(Please contact) Cummins 2 Caribbean Drive Scoresby 3179 Victoria AUSTRALIA Telephone: (61-3) 9765-3222 Fax: (61-3) 9763-0079
TRINIDAD and TOBAGO		Cummins Power South, LLC 9900 N W 77th Ave. Hialeah Gardens, FL 33016 Telephone: (305) 821-4200 Fax: (305) 557-2992
TURKEY	**Istanbul**	Hamamcioglu Muesseseleri Ticaret T.A.S. Okul Cad. No. 13 34956 Orhanli - P.K. 62 Tuzla Istanbul Turkey Telephone: (90-216) 394 3210 Fax: (90-216) 394 3208 / 9
UKRAINE	**- See Moscow Regional Office - Moscow**	Cummins Engine Company, Inc. Park Place Office E708, 113/1 Leninskiy Prospect Moscow 117198 Russia Telephone: (7-495) 956-51-22 / 23 Fax: (7-495) 956-53-62
UNITED ARAB EMIRATES	**Dhabi**	Cummins Middle East FZE Units ZF 05&06 Jebel Ali Free Zone Dhabi United Arab Emirates Telephone: (971-4) 883 8998 Fax: (971-4) 883 7971
UNITED KINGDOM	**Wellingborough**	Cummins UK Rutherford Drive Park Farm South Wellingborough, Northants NN8 6AN United Kingdom Telephone: (44-1933) 334200 Fax: (44-1933) 334198
VATICAN CITY	**- See Italy**	Cummins Italia S.p.A. Via Einaudi, 5 Peschiera Borromeo, Milano 20068 Italy Telephone: (39-02) 51 65 581 Fax: (39-02) 51 65 58 56
VENEZUELA	**Caracas**	Dieselval, C.A. Ave. Lisandro Alvarado, Sector La Florida Edificio Dieselval Valencia, Carabobo Venezuela ZIP / Postal Code: Venezuela Venezuela Telephone: (58-241) 8353074 / 8355265 Fax: (58-241) 8314553 / 8314818

VIETNAM	**Hanoi**	Diethelm & Co. Ltd., Engrg. 94, Tran Quoc Toan Street, Hoan Kiem District Hanoi Vietnam Telephone: (84-4) 9424-725 Fax: (84-4) 9424-730
VIETNAM	**Ho Chi Minh City**	Diethelm & Co. Ltd., Engrg. 189 Dien Bien Phu Street, Ward 15 Binh Thanh District Ho Chi Minh City, S.R. Vietnam Telephone: (84-8) 5121-334 Fax: (84-8) 5121-335
WESTERN SAMOA	**-See SOUTH PACIFIC ISLANDS**	(Please contact) Cummins 2 Caribbean Drive Scoresby 3179 Victoria AUSTRALIA Telephone: (61-3) 9765-3222 Fax: (61-3) 9763-0079
YEMEN	**Sana'a**	Zubieri Trading Company Al Qiyadah Street Sana'a Republic of Yemen Telephone: (967-1) 223943 / 224051 Fax: (967-1) 221611 / 245838
SERBIA & MONTENEGRO		Cummins Dizel Motori Prodaja i Servis Autoput, 22 11080 Zemum Beograd, Serbia & Montenegro Serbia & Montenegro Telephone: (381-11) 314 90 71 Fax: (381-11) 314 91 27
ZAMBIA	**Ndola**	Cummins Zambia Ltd Lufunza Avenue Ndola, Zambia Zambia Telephone: (260-2) 610 729 Fax: (260-2) 612 756
ZIMBABWE	**Harare**	Cummins Zimbabwe (Pvt) Ltd. 72 Birmingham Road Southerton, Zimbabwe Zimbabwe Telephones: (263-4) 621871 / 2 / 3 / 4 / 5 Fax: (263-4) 621880

Section TS - Troubleshooting Symptoms

Section Contents

Page
Troubleshooting Procedures and Techniques TS-1
General Information....TS-1
Troubleshooting Symptoms Charts TS-2
General Information....TS-2
Engine Will Not Crank or Cranks Slowly....TS-38
Air Compressor Air Pressure Rises Slowly TS-3
Air Compressor Noise is Excessive....TS-4
Air Compressor Pumping Excess Lubricating Oil into the Air System TS-5
Air Compressor Will Not Maintain Adequate Air Pressure (Not Pumping Continuously)....TS-6
Air Compressor Will Not Stop Pumping....TS-7
Alternator Not Charging or Insufficient Charging....TS-8
Coolant Loss - External....TS-10
Coolant Loss - Internal....TS-11
Coolant Temperature Above Normal - Gradual Overheat....TS-12
Coolant Temperature Above Normal - Sudden Overheat....TS-14
Coolant Temperature Below Normal....TS-16
Crankcase Gases (Blowby) Excessive....TS-18
Engine Brake - Low Retarding Power or Slow to Activate....TS-20
Engine Brake Does Not Operate....TS-19
Engine Brake — One or More Cylinders Braking with Power Switch Off....TS-21
Engine Decelerates Slowly....TS-22
Engine Difficult to Start or Will Not Start (Exhaust Smoke)....TS-23
Engine Difficult to Start or Will Not Start (No Exhaust Smoke)....TS-25
Engine Noise Excessive....TS-26
Engine Noise Excessive — Combustion Knocks....TS-28
Engine Power Output Low....TS-29
Engine Runs Rough at Idle....TS-31
Engine Runs Rough or Misfires....TS-32
Engine Shuts Off Unexpectedly or Dies During Deceleration....TS-33
Engine Speed Surges at Low or High Idle....TS-34
Engine Speed Surges Under Load or in Operating Range....TS-35
Engine Starts But Will Not Keep Running....TS-36
Engine Vibration Excessive....TS-37
Engine Will Not Shut Off....TS-39
Fuel Consumption Excessive....TS-40
Fuel in Coolant....TS-42
Fuel in the Lubricating Oil....TS-43
Intake Manifold Air Temperature Above Specification....TS-44
Lubricating Oil Consumption Excessive....TS-45
Lubricating Oil Contaminated....TS-47
Lubricating Oil Pressure High....TS-48
Lubricating Oil Pressure Low....TS-49
Lubricating Oil Sludge in the Crankcase Excessive....TS-50
Lubricating Oil Temperature Above Specification....TS-51
Lubricating or Transmission Oil in the Coolant....TS-52
Operating Fuel Pressure is Low....TS-53
Smoke, Black — Excessive....TS-54
Smoke, White — Excessive....TS-55
Turbocharger Boost Pressure Low....TS-56
Turbocharger Leaks Engine Oil or Fuel....TS-57

This Page Left Intentionally Blank

Troubleshooting Procedures and Techniques

General Information

This guide describes some typical engine operating problems, their causes, and some acceptable corrections to those problems. Unless noted otherwise, the problems listed are those which an operator can diagnose and repair.

⚠ WARNING ⚠

Performing troubleshooting procedures NOT outlined in this section can result in equipment damage or personal injury or death. Troubleshooting must be performed by trained, experienced technicians. Consult a Cummins Authorized Repair Location for diagnosis and repair beyond that which is outlined, and for symptoms not listed in this section. Before beginning any troubleshooting, refer to General Safety Instructions in Section i of this manual.

Follow the suggestions below for troubleshooting:

- Study the complaint thoroughly before acting
- Refer to the engine system diagrams
- Do the easiest and most logical things first
- Find and correct the cause of the complaint

Troubleshooting Symptoms Charts

General Information

Use the charts on the following pages of this section to aid in diagnosing specific engine symptoms. Read each row of blocks from top to bottom. Follow through the chart to identify the corrective action.

⚠WARNING⚠

Troubleshooting presents the risk of equipment damage, personal injury or death. Troubleshooting must be performed by trained, experienced technicians.

Air Compressor Air Pressure Rises Slowly

This is symtom tree t004

Cause	Correction
STEP 1 Air intake system restriction to air compressor is excessive	Replace the air compressor air cleaner (if installed). Check the air intake piping. Check engine air intake restriction if the air compressor inlet is plumbed to the vehicle or equipment intake system. Refer to Procedure 010-059 (Air Cleaner Restriction) in Section 5.

OK
Go To Next Step

STEP 2 Air system leaks	Block the vehicle wheels and check the air system for leaks with spring brakes applied and released. Check for leaks from the air compressor gaskets and the air system hoses, fittings, tanks, and valves. Refer to the OEM service manual.

OK
Go To Next Step

STEP 3 Air governor is malfunctioning or **not** set correctly	Check the air governor for correct operation. Refer to the OEM service manual.

OK
Go To Next Step

STEP 4 Carbon buildup is excessive in the air discharge line, downstream air valves, or cylinder head	Check for carbon buildup. Replace the air compressor discharge line and cylinder head assembly if necessary. Refer to Procedure 012-015 (Air Compressor Discharge Lines) in Section 7.

OK
Go To Next Step

STEP 5 Air system component is malfunctioning	Check the operation of air system valves, air dryers, and other OEM-installed air system components. Refer to the manufacturer's instructions.

OK
Go To Next Step

STEP 6
Contact a Cummins Authorized Repair Facility

Air Compressor Noise is Excessive

This is symtom tree t006

Cause	Correction
STEP 1 Carbon buildup is excessive in the air discharge line, downstream air valves, or cylinder head	Check for carbon buildup. Replace the air compressor discharge line and cylinder head assembly if necessary. Refer to Procedure 012-015 (Air Compressor Discharge Lines) in Section 7.
OK Go To Next Step	
STEP 2 Ice buildup in the air system components	For all models, check for ice in low spots of the air discharge line, dryer inlet, and elbow fittings. On Holset® models, also check the Econ valve (if equipped). Refer to the OEM service manual..
OK Go To Next Step	
STEP 3 Air compressor is sending air pulses into the air tanks	Install a ping tank between the air dryer and the wet tank and check discharge line size for the application. Refer to the manufacturer's instructions.
OK Go To Next Step	
STEP 4 Contact a Cummins Authorized Repair Facility	

Air Compressor Pumping Excess Lubricating Oil into the Air System

This is symtom tree t007

Cause	Correction
STEP 1 Lubricating oil drain interval is excessive	Verify the correct lubricating oil drain interval. Refer to Procedure 018-003 (Lubricating Oil Recommendations and Specifications) in Section V.

OK
Go To Next Step

STEP 2 Air intake system restriction to air compressor is excessive	Replace the air compressor air cleaner (if installed). Check the air intake piping. Check engine air intake restriction if the air compressor inlet is plumbed to the vehicle or equipment intake system. Refer to Procedure 010-059 (Air Cleaner Restriction) in Section 5.

OK
Go To Next Step

STEP 3 Contaminants are building up in the system reservoirs	Drain the reservoirs daily. Refer to Procedure 012-021 in Section 3.

OK
Go To Next Step

STEP 4 Carbon buildup is excessive in the air discharge line, air system valves, or cylinder head	Check for carbon buildup. Replace the air compressor discharge line, cylinder head, or air compressor. Check the turbocharger for oil leaks. Check the intake tube for oil. Refer to Procedure 012-015 (Air Compressor Discharge Lines) in Section 7.

OK
Go To Next Step

STEP 5 Engine angularity during operation exceeds specification	Refer to the Engine Specification data sheet.

OK
Go To Next Step

STEP 6 Air compressor runs hot	If coolant temperature is above normal, refer to the Coolant Temperature Above Normal - Gradual Overheat Symptom Tree.

OK
Go To Next Step

STEP 7
Contact a Cummins Authorized Repair Facility

Air Compressor Will Not Maintain Adequate Air Pressure (Not Pumping Continuously)

This is symtom tree t008

Cause	Correction
STEP 1 Air system leaks	Block the vehicle wheels and check the air system for leaks with spring brakes applied and released. Check for leaks from the air compressor gaskets and the air system hoses, fittings, tanks, and valves. Refer to the OEM service manual.

OK
Go To Next Step

STEP 2
Contact a Cummins Authorized Repair Facility

Air Compressor Will Not Stop Pumping

This is symtom tree t010

Cause	Correction
STEP 1 Air governor is malfunctioning or **not** set correctly	Check the air governor for correct operation. Refer to the OEM service manual.
OK Go To Next Step	
STEP 2 Air system leaks	Block the vehicle wheels and check the air system for leaks with spring brakes applied and released. Check for leaks from the air compressor gaskets and the air system hoses, fittings, tanks, and valves. Refer to the OEM service manual.
OK Go To Next Step	
STEP 3 Air system component is malfunctioning	Check the operation of air system valves, air dryers, and other OEM-installed air system components. Refer to the manufacturer's instructions.
OK Go To Next Step	
STEP 4 Contact a Cummins Authorized Repair Facility	

Alternator Not Charging or Insufficient Charging

This is symtom tree t013

Cause	Correction
STEP 1 Alternator belt is loose	Check the alternator belt tension. Adjust as necessary. Refer to Procedure 018-005 (Drive Belt Tension) in Section V.
OK Go To Next Step	
STEP 2 Alternator drive pulley is loose on the water pump shaft	Make sure the drive pulley is tight on the shaft. Refer to the manufacturer's specifications.
OK Go To Next Step	
STEP 3 Battery cables or connections are loose, broken, or corroded (excessive resistance)	Check the battery cables and connections.
OK Go To Next Step	
STEP 4 Batteries have malfunctioned	Check the condition of the batteries. Replace the batteries, if necessary. Refer to the OEM service manual.
OK Go To Next Step	
STEP 5 Vehicle gauge is malfunctioning	Check the vehicle gauge. Refer to the OEM service manual.
OK Go To Next Step	
STEP 6 Alternator or voltage regulator is malfunctioning	Test the alternator output. Replace the alternator or voltage regulator if necessary. Refer to the OEM service manual.
OK Go To Next Step	
STEP 7 Electrical system is "open" (blown fuses, broken wires, or loose connections)	Check the fuses, wires, and connections. Refer to the OEM service manual and the manufacturer's wiring diagrams.
OK Go To Next Step	
STEP 8 Alternator is overloaded or alternator capacity is below specification	Install an alternator with a higher capacity. Refer to the OEM service manual.
OK Go To Next Step	
STEP 9 Battery temperature is above specification	Position the batteries away from heat sources. Refer to the OEM service manual.
OK Go To Next Step	

Alternator Not Charging or Insufficient Charging

This is symtom tree t013

Cause	Correction
STEP 10 Contact a Cummins Authorized Repair Facility	

Coolant Loss - External

This is symtom tree t020

Cause		Correction
STEP 1 Coolant level is above specification	.....	Check the coolant level. Refer to the OEM service manual.
OK Go To Next Step		
STEP 2 External coolant leak	.....	Inspect the engine for coolant leaking from hoses, draincocks, water manifold, expansion and pipe plugs, fittings, radiator core, exhaust heat shield, heat exchanger, air compressor and cylinder head gaskets, lubricating oil cooler, water pump seal, and OEM-mounted components that have coolant flow.
OK Go To Next Step		
STEP 3 Radiator cap is **not** correct, is malfunctioning, or has low-pressure rating	.....	Check the radiator pressure cap. Refer to the OEM service manual.
OK Go To Next Step		
STEP 4 Fill line or vent lines are restricted, obstructed, or **not** routed correctly	.....	Check the vent lines and the fill line for correct routing and for restriction. Refer to the OEM service manual.
OK Go To Next Step		
STEP 5 Cooling system hose is collapsed, restricted, or leaking	.....	Inspect the hoses. Refer to Procedure 008-045 (Radiator Hoses) in Section 6.
OK Go To Next Step		
STEP 6 Contact a Cummins Authorized Repair Facility		

Coolant Loss - Internal

This is symtom tree t021

Cause	Correction
STEP 1 Fuel heater is leaking coolant	Check the fuel heater for coolant leaks. Refer to the manufacturer's instructions.
OK Go To Next Step	
STEP 2 Transmission oil cooler or torque converter cooler is leaking	Check the transmission oil cooler and torque converter cooler for coolant leaks. Refer to the manufacturer's instructions.
OK Go To Next Step	
STEP 3 Contact a Cummins Authorized Repair Facility	

Coolant Temperature Above Normal - Gradual Overheat

This is symtom tree t022

Cause	Correction
STEP 1 Electronic fault codes active or high counts of inactive fault codes	Refer to Procedure 101-007 (Electronic Controlled Fuel System) in Section 1.
OK Go To Next Step	
STEP 2 Coolant level is below specification	Inspect the engine and cooling system for external coolant leaks. Repair if necessary. Add coolant. Refer to Procedure 008-066 (Coolant Level) in Section 3.
OK Go To Next Step	
STEP 3 Charge air cooler fins, radiator fins, or air conditioner condenser fins are damaged or obstructed with debris	Inspect the charge air cooler, air conditioner condenser, and radiator fins. Clean, if necessary. Refer to the OEM service manual.
OK Go To Next Step	
STEP 4 Cold weather radiator cover or winterfront is closed	Open the cold weather radiator cover or the winterfront. Maintain a minimum of 784 cm^2 [122 in^2] or approximately 28 x 28 cm [11 x 11 in] of opening at all times. Refer to Procedure 101-015 (Operating the Engine) in Section 1.
OK Go To Next Step	
STEP 5 Cooling system hose is collapsed, restricted, or leaking	Inspect the hoses. Refer to Procedure 008-045 (Radiator Hoses) in Section 6.
OK Go To Next Step	
STEP 6 Lubricating oil level is above or below specification	Check the oil level. Add or drain oil, if necessary. Refer to Procedure 007-043 (Lubricating Oil Level) in Section 3.
OK Go To Next Step	
STEP 7 Fan shroud is damaged or missing, or the air recirculation baffles are damaged or missing	Inspect the shroud and the recirculation baffles. Repair, replace, or install if necessary. Refer to the OEM service manual.
OK Go To Next Step	
STEP 8 Radiator cap is **not** correct, is malfunctioning, or has low-pressure rating	Check the radiator pressure cap. Refer to the OEM service manual.
OK Go To Next Step	

Coolant Temperature Above Normal - Gradual Overheat

This is symtom tree t022

Cause	Correction
STEP 9 Intake manifold air temperature is above specification	Refer to the Intake Manifold Air Temperature Above Specification symptom tree.
OK Go To Next Step	
STEP 10 Coolant temperature gauge is malfunctioning	Test the temperature gauge. Repair or replace the gauge if necessary. Refer to the OEM service manual.
OK Go To Next Step	
STEP 11 Thermostat is **not** correct or is malfunctioning	Check the thermostat for the correct part number and for correct operation. Contact a Cummins Authorized Repair Facility.
OK Go To Next Step	
STEP 12 Radiator shutters are **not** opening completely, or the shutterstat setting is wrong	Inspect the radiator shutters. Repair or replace if necessary. Check the shutterstat setting. Refer to the manufacturer's instructions.
OK Go To Next Step	
STEP 13 Radiator swing check valve is malfunctioning (if equipped)	Check the swing check valve for correct operation. Refer to the OEM service manual.
OK Go To Next Step	
STEP 14 Vehicle cooling system is **not** adequate	Verify that the engine and vehicle cooling systems are using the correct components. Refer to the OEM service manual.
OK Go To Next Step	
STEP 15 Torque converter is malfunctioning	Check the torque converter. Refer to the OEM service manual.
OK Go To Next Step	
STEP 16 Contact a Cummins Authorized Repair Facility	

Coolant Temperature Above Normal - Sudden Overheat

This is symtom tree t023

Cause	Correction
STEP 1 Electronic fault codes active or high counts of inactive fault codes	Refer to Procedure 101-007 (Electronic Controlled Fuel System) in Section 1.
OK Go To Next Step	
STEP 2 Fan drive belt is broken	Check the fan drive belt. Replace the belt, if necessary. Refer to 103-002 (Drive Belts) in Section 3.
OK Go To Next Step	
STEP 3 Coolant level is below specification	Inspect the engine and cooling system for external coolant leaks. Repair if necessary. Add coolant. Refer to Procedure 008-066 (Coolant Level) in Section 3.
OK Go To Next Step	
STEP 4 Charge air cooler fins, radiator fins, or air conditioner condenser fins are damaged or obstructed with debris	Inspect the charge air cooler, air conditioner condenser, and radiator fins. Clean, if necessary. Refer to the OEM service manual.
OK Go To Next Step	
STEP 5 Cooling system hose is collapsed, restricted, or leaking	Inspect the hoses. Refer to Procedure 008-045 (Radiator Hoses) in Section 6.
OK Go To Next Step	
STEP 6 Radiator cap is **not** correct, is malfunctioning, or has low-pressure rating	Check the radiator pressure cap. Refer to the OEM service manual.
OK Go To Next Step	
STEP 7 Radiator shutters are **not** opening completely, or the shutterstat setting is wrong	Inspect the radiator shutters. Repair or replace if necessary. Check the shutterstat setting. Refer to the manufacturer's instructions.
OK Go To Next Step	
STEP 8 Cold weather radiator cover or winterfront is closed	Open the cold weather radiator cover or the winterfront. Maintain a minimum of 784 cm^2 [122 in^2] or approximately 28 x 28 cm [11 x 11 in] of opening at all times. Refer to Procedure 101-015 (Operating the Engine) in Section 1.
OK Go To Next Step	

Coolant Temperature Above Normal - Sudden Overheat

This is symtom tree t023

Cause	Correction
STEP 9 Fill line or vent lines are restricted, obstructed, or **not** routed correctly	Check the vent lines and the fill line for correct routing and for restriction. Procedure 101-015 (Operating the Engine) in Section 1
OK Go To Next Step	
STEP 10 Radiator swing check valve is malfunctioning (if equipped)	Check the swing check valve for correct operation. Refer to the OEM service manual.
OK Go To Next Step	
STEP 11 Fan drive or fan controls are malfunctioning	Check the fan drive and controls. Refer to the OEM service manual.
OK Go To Next Step	
STEP 12 Contact a Cummins Authorized Repair Facility	

Coolant Temperature Below Normal

This is symtom tree t024

Cause	Correction
STEP 1 Electronic fault codes active or high counts of inactive fault codes	Refer to Procedure 101-007 (Electronic Controlled Fuel System) in Section 1.
OK Go To Next Step	
STEP 2 Engine is operating at low ambient temperature	Check the winterfront, shutters, and under-the-hood air. Use under-the-hood intake air in cold weather. Refer to Procedure 101-015 (Operating the Engine) in Section 1.
OK Go To Next Step	
STEP 3 Coolant fill line is **not** routed correctly	Check the routing of the coolant fill line. Refer to the OEM service manual.
OK Go To Next Step	
STEP 4 Coolant temperature gauge is malfunctioning	Refer to the OEM service manual.
OK Go To Next Step	
STEP 5 Radiator shutters are stuck open or opening early	Check the shutter operation. Repair or replace the shutters if necessary. Refer to the OEM service manual.
OK Go To Next Step	
STEP 6 Radiator swing check valve is malfunctioning (if equipped)	Check the swing check valve for correct operation. Refer to the OEM service manual.
OK Go To Next Step	
STEP 7 Fan drive or fan controls are malfunctioning	Check the fan drive and controls. Refer to the OEM service manual.
OK Go To Next Step	
STEP 8 Thermostat is **not** correct or is malfunctioning	Check the thermostat for the correct part number and for correct operation. Contact a Cummins Authorized Repair Facility.
OK Go To Next Step	
STEP 9 Coolant flow through the radiator is **not** correct	Refer to the OEM service manual.
OK Go To Next Step	

Coolant Temperature Below Normal

This is symtom tree t024

Cause	Correction
STEP 10 Contact a Cummins Authorized Repair Facility	

Crankcase Gases (Blowby) Excessive

This is symtom tree t027

Cause	Correction
STEP 1 Crankcase ventilation system is plugged	Check and clean the crankcase breather and vent tube. Refer to Procedure 101-007 (Electronic Controlled Fuel System) in Section 1.
OK Go To Next Step	
STEP 2 Turbocharger oil seal is leaking	Check the turbocharger compressor and turbine seals. Contact a Cummins Authorized Repair Facility.

Engine Brake Does Not Operate

This is symtom tree t036

Cause		Correction
STEP 1 Electronic fault codes active or high counts of inactive fault codes	.....	Refer to Procedure 101-007 (Electronic Controlled Fuel System) in Section 1.

OK
Go To Next Step

STEP 2 Engine brakes disabled	.....	Enable the engine brake feature using an electronic service tool. Refer to a Cummins Authorized Repair Facility.

OK
Go To Next Step

STEP 3 Programmable parameters or selected features are **not** correct	.....	Check the programmable parameters and the selected features with an electronic service tool. Set the parameters and features again if necessary. Refer to a Cummins Authorized Repair Facility.

OK
Go To Next Step

STEP 4 Service brake pressure switch or circuit is malfunctioning	.....	Check the service brake pressure switch and circuit. Refer to a Cummins Authorized Repair Facility.

OK
Go To Next Step

STEP 5 Clutch switch or circuit is malfunctioning	.....	Check the clutch switch adjustment, switch, and circuit. Refer to a Cummins Authorized Repair Facility.

OK
Go To Next Step

STEP 6 Accelerator pedal or lever position sensor or circuit is malfunctioning	.....	Check for foot pedal restriction. Check the accelerator pedal or lever position sensor and circuit. Refer to the OEM service manual.

OK
Go To Next Step

STEP 7 Engine electrical ground is malfunctioning	.....	Check engine ground to chassis and chassis ground to battery negative (-) post. Refer to the OEM service manual.

OK
Go To Next Step

STEP 8 Engine brake adjustment is **not** correct	.....	Adjust the engine brakes. Refer to a Cummins Authorized Repair Facility.

OK
Go To Next Step

STEP 9
Contact a Cummins Authorized Repair Facility

Engine Brake - Low Retarding Power or Slow to Activate

This is symtom tree t037

Cause	Correction
STEP 1 Electronic fault codes active or high counts of inactive fault codes	Refer to Procedure 101-007 (Electronic Controlled Fuel System) in Section 1.
OK Go To Next Step	
STEP 2 Engine is cold	Allow the engine to warm to operating temperature. If the engine will **not** reach operating temperature, refer to the Coolant Temperature Below Normal symptom tree.
OK Go To Next Step	
STEP 3 Programmable parameters or selected features are **not** correct	Check the programmable parameters and the selected features with an electronic service tool. Set the parameters and features again if necessary. Refer to a Cummins Authorized Repair Facility.
OK Go To Next Step	
STEP 4 Lubricating oil pressure is below specification	Check the oil pressure. If the pressure is low, refer to the Lubricating Oil Pressure Low symptom tree.
OK Go To Next Step	
STEP 5 Air in the lubricating oil system	Check the oil level. If level is high, contact a Cummins Authorized Repair Facility.
OK Go To Next Step	
STEP 6 Engine brake adjustment is **not** correct	Adjust the engine brakes. Refer to a Cummins Authorized Repair Facility.
OK Go To Next Step	
STEP 7 Contact a Cummins Authorized Repair Facility	

Engine Brake — One or More Cylinders Braking with Power Switch Off

This is symtom tree t038

Cause	Correction
STEP 1 Electronic fault codes active or high counts of inactive fault codes	Refer to Procedure 101-007 (Electronic Controlled Fuel System) in Section 1.
OK Go To Next Step	
STEP 2 Engine brake adjustment is **not** correct	Adjust the engine brakes. Refer to a Cummins Authorized Repair Facility.
OK Go To Next Step	
STEP 3 Contact a Cummins Authorized Repair Facility	

Engine Decelerates Slowly

This is symtom tree t041

Cause	Correction
STEP 1 Electronic fault codes active or high counts of inactive fault codes	Refer to Procedure 101-007 (Electronic Controlled Fuel System) in Section 1.
OK Go To Next Step	
STEP 2 Accelerator pedal or lever is sticking	Check for a sticking accelerator pedal. Refer to the OEM service manual.
OK Go To Next Step	
STEP 3 Air in the fuel system	Prime the fuel pump. Refer to the OEM service manual.
OK Go To Next Step	
STEP 4 Contact a Cummins Authorized Repair Facility	

Engine Difficult to Start or Will Not Start (Exhaust Smoke)

This is symtom tree t043

Cause	Correction
STEP 1 Electronic fault codes active or high counts of inactive fault codes	Refer to Procedure 101-007 (Electronic Controlled Fuel System) in Section 1.
OK Go To Next Step	
STEP 2 Fuel level is low in the tank	Fill the supply tank. Refer to the OEM service manual.
OK Go To Next Step	
STEP 3 Engine cranking speed is too slow	If the cranking speed is slower than 150 rpm, refer to the Engine Will **Not** Crank or Cranks Slowly symptom tree.
OK Go To Next Step	
STEP 4 Battery voltage is low	Check the batteries and the unswitched battery supply circuit. Refer to the OEM service manual.
OK Go To Next Step	
STEP 5 Fuel grade is **not** correct for the application or the fuel quality is poor	Operate the engine from a tank of high-quality fuel. Refer to Procedure 018-002 (Fuel Recommendations and Specifications) in Section V.
OK Go To Next Step	
STEP 6 Engine is operating at low ambient temperature	Check the winterfront, shutters, and under-the-hood air. Use under-the-hood intake air in cold weather. Refer to Procedure 101-015 (Operating the Engine) in Section 1.
OK Go To Next Step	
STEP 7 Fuel inlet restriction	Check the fuel filter. Refer to Procedure 006-015 (Fuel Filter) in Section 5.
OK Go To Next Step	
STEP 8 Air in the fuel system	Prime the fuel pump. Refer to the OEM service manual.
OK Go To Next Step	
STEP 9 Vehicle parasitics are excessive	Refer to the OEM service manual.
OK Go To Next Step	

Engine Difficult to Start or Will Not Start (Exhaust Smoke)

This is symtom tree t043

Cause	Correction
STEP 10 Air intake system restriction is above specification	Check the air intake system for restriction. Clean or replace the air filter and inlet piping as necessary. Refer to Procedure 010-059 in Section 5.
OK Go To Next Step	
STEP 11 Overhead adjustments are **not** correct	Measure and adjust the overhead settings. Refer to a Cummins Authorized Repair Facility.
OK Go To Next Step	
STEP 12 Engine brakes are malfunctioning	Check the engine brake operation, adjustment, and solenoid resistance. Repair or adjust as necessary. Refer to a Cummins Authorized Repair Facility.
OK Go To Next Step	
STEP 13 Exhaust system restriction	Check the exhaust system for any restrictions. Refer to a Cummins Authorized Repair Facility.
OK Go To Next Step	
STEP 14 Contact a Cummins Authorized Repair Facility	

Engine Difficult to Start or Will Not Start (No Exhaust Smoke)

This is symtom tree t044

Cause	Correction
STEP 1 Electronic fault codes active or high counts of inactive fault codes	Refer to Procedure 101-007 (Electronic Controlled Fuel System) in Section 1.

OK
Go To Next Step

STEP 2 Vehicle antitheft feature active	Enter the correct “PIN” or verify the antitheft feature is disabled using electronic service tool Contact a Cummins Authorized Repair Facility.

OK
Go To Next Step

STEP 3 Keyswitch circuit is malfunctioning	Check the vehicle keyswitch circuit. Refer to the OEM service manual.

OK
Go To Next Step

STEP 4 Fuel level is low in the tank	Fill the supply tank. Refer to the OEM service manual.

OK
Go To Next Step

STEP 5 Air in the fuel system	Prime the fuel pump. Refer to the OEM service manual.

OK
Go To Next Step

STEP 6 Battery voltage is low	Check the batteries and the unswitched battery supply circuit. Refer to the OEM service manual.

OK
Go To Next Step

STEP 7 Fuel inlet restriction	Check the fuel filter. Refer to Procedure 006-015 (Fuel Filter) in Section 5.

OK
Go To Next Step

STEP 8 Electronic control module (ECM) is locked up	Disconnect the battery cables for 30 seconds. Connect the battery cables, and start the engine.

OK
Go To Next Step

STEP 9 Moisture in the wiring harness connectors	Dry the connectors with Cummins electronic cleaner, Part Number 3824510.

OK
Go To Next Step

STEP 10
Contact a Cummins Authorized Repair Facility

Engine Noise Excessive

This is symtom tree t047

Cause	Correction
STEP 1 Lubricating oil pressure is below specification	Check the oil pressure. If the pressure is low, refer to Lubricating Oil Pressure Low symptom tree.
OK Go To Next Step	
STEP 2 Lubricating oil level is below specification	Check the oil level. Refer to Procedure 007-043 (Lubricating Oil Level) in Section 3.
OK Go To Next Step	
STEP 3 Coolant temperature is above specification	Refer to the Coolant Temperature is Above Normal - Sudden Overheat or the Coolant Temperature is Above Normal - Gradual Overheat symptom tree.
OK Go To Next Step	
STEP 4 Lubricating oil is thin or diluted	Refer to Procedure 018-003 (Lubricating Oil Recommendations and Specifications) in Section V.
OK Go To Next Step	
STEP 5 Fan drive belt is loose, tight, or **not** in alignment	Check the fan drive belt. Refer to Section 3, Procedure 103-002 (Drive Belts).
OK Go To Next Step	
STEP 6 Fan is loose, damaged, or **not** balanced	Check the fan. Refer to Procedure 008-040 (Fan, Cooling) in Section 3.
OK Go To Next Step	
STEP 7 Engine mounts are worn, damaged, or **not** correct	Inspect the engine mounts. Refer to the OEM service manual.
OK Go To Next Step	
STEP 8 Air intake or exhaust piping is contacting the chassis or cab	Inspect the air piping, chassis, and cab for contact points. Refer to the OEM installation instructions.
OK Go To Next Step	
STEP 9 Air intake or exhaust leaks	Check for loose or damaged piping connections and missing pipe plugs. Check the turbocharger and exhaust manifold mounting. Refer to Procedure 010-024 (Air Leaks, Air Intake and Exhaust Systems) in Section 5.
OK Go To Next Step	

Engine Noise Excessive

This is symtom tree t047

Cause	Correction
STEP 10 Turbocharger noise	Turbocharger fluttering noises can be heard during deceleration or quick throttle closing. This noise is normal.
OK Go To Next Step	
STEP 11 Overhead adjustments are **not** correct	Measure and adjust the overhead settings. Refer to a Cummins Authorized Repair Facility.
OK Go To Next Step	
STEP 12 Vibration damper is damaged	Inspect the vibration damper. Refer to a Cummins Authorized Repair Facility.
OK Go To Next Step	
STEP 13 Air compressor noise is excessive	Refer to the Air Compressor Noise Is Excessive - Air Compressor symptom tree.
OK Go To Next Step	
STEP 14 Fan clutch, hydraulic pump, or refrigerant compressor noise is excessive	Isolate each component and check for noise. Refer to the OEM service manual.
OK Go To Next Step	
STEP 15 Drivetrain noise is excessive	Disconnect the drivetrain. Check for engine noise. Refer to the OEM service manual.
OK Go To Next Step	
STEP 16 Contact a Cummins Authorized Repair Facility	

Engine Noise Excessive — Combustion Knocks

This is symtom tree t048

Cause	Correction
STEP 1 Engine is operating at low ambient temperature	Check the winterfront, shutters, and under-the-hood air. Use under-the-hood intake air in cold weather. Refer to Procedure 101-015 (Operating the Engine) in Section 1.
OK Go To Next Step	
STEP 2 Ether starting aid is malfunctioning	Repair or replace the ether starting aids. Refer to the manufacturer's instructions.
OK Go To Next Step	
STEP 3 Fuel grade is **not** correct for the application or the fuel quality is poor	Operate the engine from a tank of high-quality fuel. Refer to Procedure 018-002 (Fuel Recommendations and Specifications) in Section V.
OK Go To Next Step	
STEP 4 Air in the fuel system	Prime the fuel pump. Refer to the OEM service manual.
OK Go To Next Step	
STEP 5 Coolant temperature is below specification	Refer to the Coolant Temperature Below Normal symptom tree.
OK Go To Next Step	
STEP 6 Overhead adjustments are **not** correct	Measure and adjust the overhead settings. Refer to a Cummins Authorized Repair Facility.
OK Go To Next Step	
STEP 7 Contact a Cummins Authorized Repair Facility	

Engine Power Output Low

This is symtom tree t057

Cause	Correction
STEP 1 Electronic fault codes active or high counts of inactive fault codes	Refer to Procedure 101-007 (Electronically Controlled Fuel System) in Section 1.
OK Go To Next Step	
STEP 2 Accelerator pedal or lever is sticking	Check for a sticking accelerator pedal. Refer to the OEM service manual.
OK Go To Next Step	
STEP 3 Tachometer or speedometer is **not** calibrated or is malfunctioning	Compare the vehicle tachometer and speedometer readings with an electronic service tool reading. Check the calibration values for the flywheel teeth, rear axle ratio, and tire revolutions. Adjust the values if necessary. Refer to the OEM service manual.
OK Go To Next Step	
STEP 4 Programmable parameters or selected features are **not** correct	Check the programmable parameters and the selected features with an electronic service tool. Set the parameters and features again if necessary. Refer to a Cummins Authorized Repair Location.
OK Go To Next Step	
STEP 5 Fuel grade is **not** correct for the application or the fuel quality is poor	Operate the engine from a tank of high-quality fuel. Refer to Procedure 018-002 (Fuel Recommendations and Specifications) in Section V.
OK Go To Next Step	
STEP 6 Fuel inlet restriction	Check the fuel filter. Refer to Procedure 006-015 (Fuel Filter Spin-on) in Section 5.
OK Go To Next Step	
STEP 7 Air in the fuel system	Prime the fuel pump. Refer to the OEM service manual.
OK Go To Next Step	
STEP 8 Air intake system restriction is above specification	Check the air intake system for restriction. Clean or replace the air filter and inlet piping as necessary. Refer to Procedure 010-058 (Air Intake Piping) in Section 3.
OK Go To Next Step	

Engine Power Output Low

This is symtom tree t057

Cause	Correction
STEP 9 Air intake or exhaust leaks	Check for loose or damaged piping connections and missing pipe plugs. Check the turbocharger and exhaust manifold mounting. Refer to Procedure 010-024 (Air Leaks, Air Intake and Exhaust System) in Section 5.
OK Go To Next Step	
STEP 10 Charge air cooler is restricted or leaking	Inspect the charge air cooler for air restrictions or leaks. Refer to Procedure 010-028 (Charge Air Piping) in Section 3.
OK Go To Next Step	
STEP 11 Drivetrain is **not** correctly matched to the engine	Check for correct gearing and drivetrain components. Refer to the OEM vehicle specifications..
OK Go To Next Step	
STEP 12 Exhaust system restriction is above specification	Check the exhaust system for restrictions. Refer to the OEM service manual.
OK Go To Next Step	
STEP 13 Vehicle parasitics are excessive	Refer to the OEM service manual.
OK Go To Next Step	
STEP 14 Lubricating oil level is above specification	Check the oil level. Verify the dipstick calibration and oil pan capacity. Fill the system to the specified level. Refer to Procedure 007-043 (Lubricating Oil Level) in Section 3.
OK Go To Next Step	
STEP 15 Overhead adjustments are **not** correct	Measure and adjust the overhead settings. Refer to Procedure 003-004 (Overhead Set) in Section 6.
OK Go To Next Step	
STEP 16 Engine brake adjustment is **not** correct	Adjust the engine brakes. Refer to a Cummins Authorized Repair Location.
OK Go To Next Step	
STEP 17 Contact a Cummins Authorized Repair Facility	

Engine Runs Rough at Idle

This is symtom tree t061

Cause	Correction
STEP 1 Electronic fault codes active or high counts of inactive fault codes	Refer to Procedure 101-007 (Electronically Controlled Fuel System) in Section 1.
OK Go To Next Step	
STEP 2 Engine is operating at low ambient temperature	Check the winterfront, shutters, and under-the-hood air. Use under-the-hood intake air in cold weather. Refer to Procedure 101-015 (Operating the Engine) in Section 1.
OK Go To Next Step	
STEP 3 Engine mounts are worn, damaged, or **not** correct	Check the engine mounts. Refer to the OEM service manual.
OK Go To Next Step	
STEP 4 Fuel grade is **not** correct for the application or the fuel quality is poor	Operate the engine from a tank of high-quality fuel. Refer to Procedure 018-002 (Fuel Recommendations and Specifications) in Section V.
OK Go To Next Step	
STEP 5 Air in the fuel system	Prime the fuel pump. Refer to the OEM service manual.
OK Go To Next Step	
STEP 6 Fuel inlet restriction	Check the fuel filter. Refer to Procedure 006-015 (Fuel Filter Spin-on) in Section 5.
OK Go To Next Step	
STEP 7 Overhead adjustments are **not** correct	Measure and adjust the overhead settings. Refer to Procedure 003-004 (Overhead Set) in Section 6.
OK Go To Next Step	
STEP 8 Vibration damper is damaged	Inspect the vibration damper. Refer to Procedure 001-052 (Vibration Damper, Viscous) in Section 6.
OK Go To Next Step	
STEP 9 Contact a Cummins Authorized Repair Facility	

Engine Runs Rough or Misfires

This is symtom tree t062

Cause	Correction
STEP 1 Electronic fault codes active or high counts of inactive fault codes	Refer to Procedure 101-007 (Electronically Controlled Fuel System) in Section 1.
OK Go To Next Step	
STEP 2 Engine is operating at low ambient temperature	Check the winterfront, shutters, and under-the-hood air. Use under-the-hood intake air in cold weather. Refer to Procedure 101-015 (Operating the Engine) in Section 1.
OK Go To Next Step	
STEP 3 Fuel grade is **not** correct for the application or the fuel quality is poor	Operate the engine from a tank of high-quality fuel. Refer to Procedure 018-002 (Fuel Recommendations and Specifications) in Section V.
OK Go To Next Step	
STEP 4 Air in the fuel system	Prime the fuel pump. Refer to the OEM service manual.
OK Go To Next Step	
STEP 5 Fuel inlet restriction	Check the fuel filter. Refer to Procedure 006-015 (Fuel Filter Spin-on) in Section 3.
OK Go To Next Step	
STEP 6 Engine brake adjustment is **not** correct	Adjust the engine brakes. Refer to a Cummins Authorized Repair Location.
OK Go To Next Step	
STEP 7 Overhead adjustments are **not** correct	Measure and adjust the overhead settings. Refer to Procedure 003-004 (Overhead Set) in Section 6.
OK Go To Next Step	
STEP 8 Vibration damper is damaged	Inspect the vibration damper. Refer to Procedure 001-052 (Vibration Damper, Viscous) in Section 6.
OK Go To Next Step	
STEP 9 Contact a Cummins Authorized Repair Facility	

Engine Shuts Off Unexpectedly or Dies During Deceleration

This is symtom tree t064

Cause	Correction
STEP 1 Electronic fault codes active or high counts of inactive fault codes	Refer to Procedure 101-007 (Electronically Controlled Fuel System) in Section 1.
OK Go To Next Step	
STEP 2 Engine will **not** restart	Refer to the Engine Difficult to Start or Will Not Start symptom tree.
OK Go To Next Step	
STEP 3 Keyswitch circuit is malfunctioning	Check the vehicle keyswitch circuit. Refer to the OEM service manual.
OK Go To Next Step	
STEP 4 Battery voltage is low	Check the batteries and the unswitched battery supply circuit. Refer to the OEM service manual.
OK Go To Next Step	
STEP 5 Fuel inlet restriction	Check the fuel filter. Refer to Procedure 006-015 (Fuel Filter Spin-on) in Section 3.
OK Go To Next Step	
STEP 6 Air in the fuel system	Prime the fuel pump. Refer to the OEM service manual.
OK Go To Next Step	
STEP 7 Contact a Cummins Authorized Repair Facility	

Engine Speed Surges at Low or High Idle

This is symtom tree t066

Cause	Correction
STEP 1 Electronic fault codes active or high counts of inactive fault codes	Refer to Procedure 101-007 (Electronically Controlled Fuel System) in Section 1.
OK Go To Next Step	
STEP 2 Fuel level is low in the tank	Fill the supply tank. Refer to the OEM service manual.
OK Go To Next Step	
STEP 3 Fuel inlet restriction	Check the fuel filter. Refer to Procedure 006-015 (Fuel Filter Spin-on) in Section 5.
OK Go To Next Step	
STEP 4 Air in the fuel system	Prime the fuel pump. Refer to the OEM service manual.
OK Go To Next Step	
STEP 5 Idling with excessive load	Use the PTO feature for loaded conditions at low engine speeds. Refer to a Cummins Authorized Repair Location.
OK Go To Next Step	
STEP 6 Alternator is malfunctioning	Temporarily disconnect the alternator and run the engine. Replace the alternator if necessary. Refer to the OEM service manual.
OK Go To Next Step	
STEP 7 Contact a Cummins Authorized Repair Facility	

Engine Speed Surges Under Load or in Operating Range

This is symtom tree t067

Cause	Correction
STEP 1 Electronic fault codes active or high counts of inactive fault codes	Refer to Procedure 101-007 (Electronically Controlled Fuel System) in Section 1.
OK Go To Next Step	
STEP 2 Engine speed also surges at idle	Refer to the Engine Speed Surges at Low or High Idle symptom tree..
OK Go To Next Step	
STEP 3 Air in the fuel system	Prime the fuel pump. Refer to the OEM service manual.
OK Go To Next Step	
STEP 4 Fuel drain line restriction	Check the fuel drain lines for restriction. Refer to the OEM service manual.
OK Go To Next Step	
STEP 5 Fuel inlet restriction	Check the fuel filter. Refer to Procedure 006-015 (Fuel Filter Spin-on) in Section 5.
OK Go To Next Step	
STEP 6 Air intake system restriction is above specification	Check the air intake system for restriction. Clean or replace the air filter and inlet piping as necessary. Refer to Procedure 010-058 (Air Intake Piping) in Section 3.
OK Go To Next Step	
STEP 7 Exhaust system restriction is **not** within specification	Check the exhaust system for restrictions. Contact a Cummins Authorized Repair Facility.

Engine Starts But Will Not Keep Running

This is symtom tree t072

Cause	Correction
STEP 1 Electronic fault codes active or high counts of inactive fault codes	Refer to Procedure 101-007 (Electronically Controlled Fuel System) in Section 1.
OK Go To Next Step	
STEP 2 Idle shutdown or PTO shutdown features are activated	Turn the keyswitch to the OFF position for 30 seconds. Turn the keyswitch to the ON position and check fault code operation.
OK Go To Next Step	
STEP 3 Fuel level is low in the tank	Fill the supply tank. Refer to the OEM service manual.
OK Go To Next Step	
STEP 4 Battery voltage is low	Check the batteries and the unswitched battery supply circuit. Refer to the OEM service manual.
OK Go To Next Step	
STEP 5 Fuel inlet restriction	Check the fuel filter. Refer to Procedure 006-015 (Fuel Filter Spin-on) in Section 5.
OK Go To Next Step	
STEP 6 Keyswitch circuit is malfunctioning	Check the vehicle keyswitch circuit. Refer to the OEM service manual.
OK Go To Next Step	
STEP 7 Vehicle parasitics are excessive	Check for transmission malfunctioning, cooling fan operation cycle time, and engine-driven units. Refer to the OEM service manual.
OK Go To Next Step	
STEP 8 Fuel grade is **not** correct for the application or the fuel quality is poor	Operate the engine from a tank of high-quality fuel. Refer to Procedure 018-002 (Fuel Recommendations and Specifications) in Section V.
OK Go To Next Step	
STEP 9 Contact a Cummins Authorized Repair Facility	

Engine Vibration Excessive

This is symtom tree t075

Cause	Correction
STEP 1 Electronic fault codes active or high counts of inactive fault codes	Refer to Procedure 101-007 (Electronically Controlled Fuel System) in Section 1.
OK Go To Next Step	
STEP 2 Engine is misfiring	Refer to the Engine Runs Rough or Misfires symptom tree.
OK Go To Next Step	
STEP 3 Engine idle speed is set too low (electronically controlled fuel systems)	Verify the correct idle speed setting. Increase the idle speed with the idle increment switch or an electronic service tool.
OK Go To Next Step	
STEP 4 Fan is loose, damaged, or **not** balanced	Check the fan. Refer to Procedure 008-040 (Fan, Cooling) in Section 3.
OK Go To Next Step	
STEP 5 Engine mounts are worn, damaged, or **not** correct	Check the engine mounts. Refer to the OEM service manual.
OK Go To Next Step	
STEP 6 Vibration damper is damaged	Inspect the vibration damper. Refer to Procedure 001-052 (Vibration Damper, Viscous) in Section 6.
OK Go To Next Step	
STEP 7 Drivetrain components are malfunctioning or are **not** correct	Compare the drivetrain components to the engine and equipment specifications. Isolate the drivetrain components and check for vibrations. Refer to the OEM specifications.
OK Go To Next Step	
STEP 8 Power take-off (PTO) is damaged	Check the PTO for damage and correct installation. Refer to the manufacturer's instructions.
OK Go To Next Step	
STEP 9 Contact a Cummins Authorized Repair Facility	

Engine Will Not Crank or Cranks Slowly

This is symtom tree t077

Cause	Correction
STEP 1 Starting motor is malfunctioning or starting motor is **not** correct	Check the starting motor operation. Compare the starting motor with the engine and vehicle specifications. Refer to a Cummins Authorized Repair Location.
OK Go To Next Step	
STEP 2 Starting motor pinion or ring gear is damaged	Remove the starting motor, and inspect the gear.
OK Go To Next Step	
STEP 3 Engine-driven units are engaged	Disengage engine-driven units.
OK Go To Next Step	
STEP 4 Lubricating oil does **not** meet specifications for operating conditions	Change the oil and filters. Refer to Procedure 007-002 (Lubricating Oil and Filters) in Section 4. Use the oil recommended in Section V.
OK Go To Next Step	
STEP 5 Lubricating oil level is above specification	Check the oil level. Verify the dipstick calibration and oil pan capacity. Fill the system to the specified level. Refer to Procedure 007-043 (Lubricating Oil Level) in Section 3.
OK Go To Next Step	
STEP 6 Crankshaft rotation is impaired	Check the crankshaft for ease of rotation. Refer to a Cummins Authorized Repair Location.
OK Go To Next Step	
STEP 7 Contact a Cummins Authorized Repair Facility	

Engine Will Not Shut Off

This is symtom tree t081

Cause	Correction
STEP 1 Keyswitch circuit is malfunctioning	Check the vehicle keyswitch circuit. Refer to the OEM service manual.

OK
Go To Next Step

STEP 2 Engine is running on fumes drawn into the air intake	Check the air intake ducts. Locate and isolate the source of the fumes. Repair as necessary. Refer to the OEM service manual.

OK
Go To Next Step

STEP 3 Turbocharger oil seal is leaking	Check the turbocharger compressor and turbine seals. Contact a Cummins Authorized Repair Facility.

Fuel Consumption Excessive

This is symtom tree t087

Cause	Correction
STEP 1 Fuel leak	Check the fuel lines, fuel connections, and fuel filters for leaks. Check the fuel lines to the supply tanks. Refer to the OEM service manual.
OK Go To Next Step	
STEP 2 Hubometer or odometer is miscalibrated	Check the hubometer and odometer calibrations. Calibrate or replace the hubometer or odometer, if necessary. Calculate fuel consumption with new mileage figures.
OK Go To Next Step	
STEP 3 Operator technique is **not** correct	Refer to Procedure 101-015 (Operating the Engine) in Section 1.
OK Go To Next Step	
STEP 4 Equipment and environmental factors are affecting fuel consumption	Consider ambient temperatures, wind, tire size, axle alignment, routes, and use of aerodynamic aids when evaluating fuel consumption.
OK Go To Next Step	
STEP 5 Drivetrain is **not** correctly matched to the engine	Check for correct gearing and drivetrain components. Refer to the OEM service manual.
OK Go To Next Step	
STEP 6 Electronic fault codes active or high counts of inactive fault codes	Refer to Procedure 101-007 (Electronically Controlled Fuel System) in Section 1.
OK Go To Next Step	
STEP 7 Fuel grade is **not** correct for the application or the fuel quality is poor	Operate the engine from a tank of high-quality fuel. Refer to Procedure 018-002 (Fuel Recommendations and Specifications) in Section V.
OK Go To Next Step	
STEP 8 Lubricating oil level is above specification	Check the oil level. Verify the dipstick calibration and oil pan capacity. Fill the system to the specified level. Refer to Procedure 007-043 (Lubricating Oil Level) in Section 3.
OK Go To Next Step	

Fuel Consumption Excessive

This is symtom tree t087

Cause	Correction
STEP 9 Air intake system restriction is above specification	Check the air intake system for restriction. Clean or replace the air filter and inlet piping as necessary. Refer to Procedure 010-058 (Air Intake Piping) in Section 3.
OK Go To Next Step	
STEP 10 Exhaust system restriction is above specification	Check the exhaust system for restrictions. Refer to the OEM service manual.
OK Go To Next Step	
STEP 11 Overhead adjustments are **not** correct	Measure and adjust the overhead settings. Refer to Procedure 003-004 (Overhead Set) in Section 6.
OK Go To Next Step	
STEP 12 Contact a Cummins Authorized Repair Facility	

Fuel in Coolant

This is symtom tree t091

Cause	Correction
STEP 1 Bulk coolant supply is contaminated	Check the bulk coolant supply. Drain the coolant and replace with noncontaminated coolant. Replace the coolant filters. Refer to Procedure 008-006 (Coolant Filter) in Section 5
OK Go To Next Step	
STEP 2 Fuel heater is malfunctioning (if equipped)	Check the fuel heater and replace, if necessary. Refer to the manufacturer's instructions.
OK Go To Next Step	
STEP 3 Contact a Cummins Authorized Repair Facility	

Fuel in the Lubricating Oil

This is symtom tree t092

Cause	Correction
STEP 1 Bulk oil supply is contaminated	Check the bulk oil supply. Drain the oil and replace with noncontaminated oil. Replace the oil filters.
OK Go To Next Step	
STEP 2 Engine idle time is excessive	Low oil and coolant temperatures can be caused by long idle time (greater than 10 minutes). Shut off the engine rather than idle for long periods. If idle time is necessary, raise the idle speed.
OK Go To Next Step	
STEP 3 Fuel drain line is restricted	Inspect the fuel drain lines for restrictions. Remove any restrictions found. Refer to the OEM service manual.
OK Go To Next Step	
STEP 4 Contact a Cummins Authorized Repair Facility	

Intake Manifold Air Temperature Above Specification

This is symtom tree t096

Cause	Correction
STEP 1 Electronic fault codes active or high counts of inactive fault codes	Refer to Procedure 101-007 (Electronically Controlled Fuel System) in Section 1.
OK Go To Next Step	
STEP 2 Intake manifold temperature gauge is malfunctioning, if equipped	Test the temperature gauge. Refer to the OEM service manual.
OK Go To Next Step	
STEP 3 Radiator shutters are **not** opening completely, or the shutterstat setting is wrong	Inspect the radiator shutters. Repair or replace if necessary. Check the shutterstat setting. Refer to the manufacturer's instructions.
OK Go To Next Step	
STEP 4 Cold weather radiator cover or winterfront is closed	Open the cold weather radiator cover or the winterfront. Maintain a minimum of 784 cm^2 [122 in^2] or approximately 28 x 28 cm [11 x 11 in] of opening at all times. Refer to Procedure 101-015 (Operating the Engine) in Section 1.
OK Go To Next Step	
STEP 5 Charge air cooler fins, radiator fins, or air conditioner condenser fins are damaged or obstructed with debris	Inspect the charge air cooler, air conditioner condenser, and radiator fins. Clean, if necessary. Refer to Procedure 010-028 (Charge Air Piping) in Section 3.
OK Go To Next Step	
STEP 6 Fan shroud is damaged or missing, or the air recirculation baffles are damaged or missing	Inspect the shroud and the recirculation baffles. Repair, replace, or install if necessary. Refer to the OEM service manual.
OK Go To Next Step	
STEP 7 Fan drive or fan controls are malfunctioning	Check the fan drive and controls. Refer to the OEM service manual.
OK Go To Next Step	
STEP 8 Fan is **not** an adequate size for the application	Verify that the fan is the correct size. Refer to the OEM specifications and Engine Data Sheet.
OK Go To Next Step	
STEP 9 Contact a Cummins Authorized Repair Facility	

Lubricating Oil Consumption Excessive

This is symtom tree t102

Cause	Correction
STEP 1 Verify the oil consumption rate	Check the amount of oil added versus the mileage.
OK Go To Next Step	
STEP 2 Lubricating oil leak (external)	Inspect the engine for external oil leaks. Tighten the capscrews, pipe plugs, and fittings. Replace gaskets, if necessary. Refer to Procedure 018-006 (Engine Component Torque Values) in Section V.
OK Go To Next Step	
STEP 3 Crankcase ventilation system is plugged	Check and clean the crankcase breather and vent tube. Refer to Procedure 003-018 (Crankcase Breather Tube) in Section 3.
OK Go To Next Step	
STEP 4 Air compressor is pumping lubricating oil into the air system	Check the air lines for carbon buildup and lubricating oil. Refer to Procedure 012-015 (Air Compressor Discharge Lines) in Section 7.
OK Go To Next Step	
STEP 5 Turbocharger oil seal is leaking	Check the turbocharger compressor and turbine seals. Contact a Cummins Authorized Repair Facility.
OK Go To Next Step	
STEP 6 Lubricating oil temperature is above specification	Contact a Cummins Authorized Repair Facility.
OK Go To Next Step	
STEP 7 Lubricating oil is contaminated with coolant or fuel	Contact a Cummins Authorized Repair Facility.
OK Go To Next Step	
STEP 8 Lubricating oil dipstick calibration is **not** correct	Check the dipstick calibration. Refer to a Cummins Authorized Repair Location.
OK Go To Next Step	
STEP 9 Lubricating oil does **not** meet specifications for operating conditions	Change the oil and filters. Refer to Procedure 018-003 (Lubricating Oil Recommendations and Specifications) in Section V. Use the oil type recommended in Section V.
OK Go To Next Step	

Lubricating Oil Consumption Excessive

This is symtom tree t102

Cause	Correction
STEP 10 Lubricating oil drain interval is excessive	Verify the correct lubricating oil drain interval. Refer to Procedure 102-002 (Maintenance Schedule) in Section 2.

OK
Go To Next Step

STEP 11
Contact a Cummins Authorized Repair Facility

Lubricating Oil Contaminated

This is symtom tree t103

Cause	Correction
STEP 1 Bulk oil supply is contaminated	Check the bulk oil supply. Drain the oil and replace with noncontaminated oil. Replace the oil filters.
OK Go To Next Step	
STEP 2 Internal coolant leaks	Refer to the Coolant Loss - Internal symptom tree.
OK Go To Next Step	
STEP 3 Lubricating oil sludge is excessive	Refer to the Lubricating Oil Sludge in the Crankcase Is Excessive symptom tree.
OK Go To Next Step	
STEP 4 Fuel in the lubricating oil	Refer to the Fuel in the Lubricating oil symptom tree.
OK Go To Next Step	
STEP 5 Contact a Cummins Authorized Repair Facility	

Lubricating Oil Pressure High

This is symtom tree t104

Cause		Correction
STEP 1 Electronic fault codes active or high counts of inactive fault codes	.....	Refer to Procedure 101-007 (Electronically Controlled Fuel System) in Section 1.
OK Go To Next Step		
STEP 2 Lubricating oil pressure switch, gauge, or sensor is malfunctioning or is **not** in the correct location	.....	Check the oil pressure switch, gauge, or sensor for correct operation and location. Refer to the OEM service manual.
OK Go To Next Step		
STEP 3 Coolant temperature is below specification	.....	Refer to the Coolant Temperature Below Normal symptom tree.
OK Go To Next Step		
STEP 4 Lubricating oil does **not** meet specifications for operating conditions	.....	Change the oil and filters. Refer to Procedure 007-002 (Lubricating Oil and Filters) in Section 4. Use the oil type recommended in Section V.
OK Go To Next Step		
STEP 5 Contact a Cummins Authorized Repair Facility		

Lubricating Oil Pressure Low

This is symtom tree t105

Cause		Correction
STEP 1	.....	
OK Go To Next Step		
STEP 2 Lubricating oil level is above or below specification	.....	Check the oil level. Add or drain oil, if necessary. Refer to Procedure 007-043 (Lubricating Oil Level) in Section 3.
OK Go To Next Step		
STEP 3 Lubricating oil leak (external)	.....	Inspect the engine for external oil leaks. Tighten the capscrews, pipe plugs, and fittings. Replace gaskets, if necessary. Refer to Procedure 018-006 (Engine Component Torque Values) in Section V for specifications.
OK Go To Next Step		
STEP 4 Engine angularity during operation exceeds specification	.....	Refer to the Engine Data Sheet.
OK Go To Next Step		
STEP 5 Lubricating oil pressure switch, gauge, or sensor is malfunctioning or is **not** in the correct location	.....	Check the oil pressure switch, gauge, or sensor for correct operation and location. Refer to the OEM service manual.
OK Go To Next Step		
STEP 6 Lubricating oil does **not** meet specifications for operating conditions	.....	Change the oil and filters. Refer to Procedure 007-002 (Lubricating Oil and Filters) in Section 4. Use the oil type recommended in Section V.
OK Go To Next Step		
STEP 7 Lubricating oil is contaminated with coolant or fuel	.....	Contact a Cummins Authorized Repair Facility.
OK Go To Next Step		
STEP 8 Lubricating oil filter is plugged	.....	Change the oil and filter. Refer to Procedure 007-002 (Lubricating Oil and Filters) in Section 4. Review the oil change interval.
OK Go To Next Step		
STEP 9 Lubricating oil temperature is above specification	.....	Contact a Cummins Authorized Repair Facility.

Lubricating Oil Sludge in the Crankcase Excessive

This is symtom tree t106

Cause	Correction
STEP 1 Bulk oil supply is contaminated	Check the bulk oil supply. Drain the oil and replace with noncontaminated oil. Replace the oil filters.
OK Go To Next Step	
STEP 2 Lubricating oil does **not** meet specifications for operating conditions	Change the oil and filters. Refer to Procedure 007-002 (Lubricating Oil and Filters) in Section 4. Use the oil recommended in Section V.
OK Go To Next Step	
STEP 3 Lubricating oil drain interval is excessive	Verify the correct lubricating oil drain interval. Refer to Procedure 102-002 (Maintenance Schedule) in Section 2.
OK Go To Next Step	
STEP 4 Fuel grade is **not** correct for the application or the fuel quality is poor	Operate the engine from a tank of high-quality fuel. Refer to Procedure 018-002 (Fuel Recommendations and Specifications) in Section V.
OK Go To Next Step	
STEP 5 Coolant temperature is below specification	Refer to the Coolant Temperature Below Normal symptom tree.
OK Go To Next Step	
STEP 6 Lubricating oil is contaminated with coolant or fuel	Contact a Cummins Authorized Repair Facility.
OK Go To Next Step	
STEP 7 Crankcase ventilation system is plugged	Check and clean the crankcase breather and vent tube. Refer to Procedure 003-018 (Crankcase Breather Tube) in Section 3.
OK Go To Next Step	
STEP 8 Contact a Cummins Authorized Repair Facility	

Lubricating Oil Temperature Above Specification

This is symtom tree t107

Cause	Correction
STEP 1 Electronic fault codes active or high counts of inactive fault codes	Refer to Procedure 101-007 (Electronically Controlled Fuel System) in Section 1.
OK Go To Next Step	
STEP 2 Lubricating oil level is above or below specification	Check the oil level. Add or drain oil, if necessary. Refer to Procedure 007-043 (Lubricating Oil Level) in Section 3.
OK Go To Next Step	
STEP 3 Coolant temperature is above specification	Refer to the Coolant Temperature is Above Normal - Sudden Overheat or the Coolant Temperature is Above Normal - Gradual Overheat symptom tree.
OK Go To Next Step	
STEP 4 Contact a Cummins Authorized Repair Facility	

Lubricating or Transmission Oil in the Coolant

This is symtom tree t108

Cause	Correction
STEP 1 Bulk coolant supply is contaminated	Check the bulk coolant supply. Drain the coolant and replace with noncontaminated coolant. Replace the coolant filters. Refer to Procedure 008-006 (Coolant Filter) in Section 5
OK Go To Next Step	
STEP 2 Torque converter cooler or hydraulic oil cooler is malfunctioning	Remove and inspect the cooler cores and o-rings. Refer to the OEM service manual.
OK Go To Next Step	
STEP 3 Contact a Cummins Authorized Repair Facility	

Operating Fuel Pressure is Low

This is symtom tree t109

Cause	Correction
STEP 1 Air in the fuel system	Prime the fuel pump. Refer to a Cummins Authorized Repair Location.
OK Go To Next Step	
STEP 2 Fuel inlet restriction	Check the fuel filter. Refer to Procedure 006-015 (Fuel Filter Spin-on) in Section 5.

Smoke, Black — Excessive

This is symtom tree t116

Cause	Correction
STEP 1 Electronic fault codes active or high counts of inactive fault codes	Refer to Procedure 101-007 (Electronically Controlled Fuel System) in Section 1.
OK Go To Next Step	
STEP 2 Fuel grade is **not** correct for the application or the fuel quality is poor	Operate the engine from a tank of high-quality fuel. Refer to Procedure 018-002 (Fuel Recommendations and Specifications) in Section V.
OK Go To Next Step	
STEP 3 Air intake or exhaust leaks	Check for loose or damaged piping connections and missing pipe plugs. Check the turbocharger and exhaust manifold mounting. Refer to Procedure 010-024 (Air Leaks, Air Intake and Exhaust Systems) in Section 5.
OK Go To Next Step	
STEP 4 Air intake system restriction is above specification	Check the air intake system for restriction. Clean or replace the air filter and inlet piping as necessary. Refer to Procedure 010-058 (Air Intake Piping) in Section 3.
OK Go To Next Step	
STEP 5 Exhaust system restriction is above specification	Check the exhaust system for restrictions. Refer to the OEM service manual.
OK Go To Next Step	
STEP 6 Charge air cooler is restricted or leaking	Inspect the charge air cooler for air restrictions or leaks. Refer to Procedure 010-028 (Charge Air Cooler) in Section 3.
OK Go To Next Step	
STEP 7 Overhead adjustments are **not** correct	Measure and adjust the overhead settings. Refer to Procedure 003-004 (Overhead Set) in Section 6.
OK Go To Next Step	
STEP 8 Turbocharger oil seal is leaking	Check the turbocharger compressor and turbine seals. Contact a Cummins Authorized Repair Facility.
OK Go To Next Step	
STEP 9 Contact a Cummins Authorized Repair Facility	

Smoke, White — Excessive

This is symtom tree t118

Cause	Correction
STEP 1 Electronic fault codes active or high counts of inactive fault codes	Refer to Procedure 101-007 (Electronically Controlled Fuel System) in Section 1.
OK Go To Next Step	
STEP 2 Engine is cold	Allow the engine to warm to operating temperature. If the engine will **not** reach operating temperature, refer to the Coolant Temperature Below Normal symptom tree.
OK Go To Next Step	
STEP 3 Engine is operating at low ambient temperature	Check the winterfront, shutters, and under-the-hood air. Use under-the-hood intake air in cold weather. Refer to Procedure 101-015 (Operating the Engine) in Section 1.
OK Go To Next Step	
STEP 4 Fuel inlet restriction	Check for fuel inlet restriction. Contact a Cummins Authorized Repair Facility.
OK Go To Next Step	
STEP 5 Fuel grade is **not** correct for the application or the fuel quality is poor	Operate the engine from a tank of high-quality fuel. Refer to Procedure 018-002 (Fuel Recommendations and Specifications) in Section V.
OK Go To Next Step	
STEP 6 Overhead adjustments are **not** correct	Measure and adjust the overhead settings. Refer to Procedure 003-004 (Overhead Set) in Section 6.
OK Go To Next Step	
STEP 7 Contact a Cummins Authorized Repair Facility	

Turbocharger Boost Pressure Low

This is symtom tree t121

Cause	Correction
STEP 1 Intake and exhaust system restricted	Check the intake and exhaust systems for restrictions. Inspect the intake air filter and replace as necessary.

OK
Go To Next Step

STEP 2 Air intake or exhaust leaks	Check for loose or damaged piping connections and missing pipe plugs. Check the turbocharger and exhaust manifold mounting. Refer to Procedure 010-024 (Air Leaks, Air Intake and Exhaust Systems) in Section 5.

OK
Go To Next Step

STEP 3
Contact a Cummins Authorized Repair Facility

Turbocharger Leaks Engine Oil or Fuel

This is symtom tree t122

Cause	Correction
STEP 1 Engine is operating for extended periods under light or no-load conditions (slobbering)	Review the engine operating instructions. Refer to Procedure 101-015 (Operating the Engine) in Section 1.

OK
Go To Next Step

STEP 2 Turbocharger oil seal is leaking	Check the turbocharger compressor and turbine seals. Contact a Cummins Authorized Repair Facility.

Notes

Section V - Maintenance Specifications

Section Contents

Page

Air Intake System V-5
Specifications V-5
Industrial and Generator Drive V-5
Capscrew Markings and Torque Values V-19
Capscrew Markings and Torque Values - Metric V-19
Capscrew Markings and Torque Values - U.S. Customary V-19
General Information V-19
Coolant Recommendations and Specifications V-12
Coolant Replacement Requirements V-16
Cooling System Sealing Additives V-13
Cooling System Soluble Oils V-13
Fleetguard® DCA4 Service Filters and Liquid Precharge V-14
Fully Formulated Coolant/Antifreeze V-12
Supplemental Coolant Additive (SCA) V-14
Test Intervals V-15
Testing SCA Concentration Level CC-2602 Test Kit V-14
Precautions and Instructions for Proper Kit Use V-14
Cooling System V-4
General Information V-4
Specifications V-4
Cummins/Fleetguard® Filter Specifications V-8
Specifications V-8
Drive Belt Tension V-17
Tension Chart V-17
Electrical System V-7
Specifications V-7
Engine Component Torque Values V-18
General Information V-18
Exhaust System V-6
Specifications V-6
Industrial and Generator Drive V-6
Fuel Recommendations and Specifications V-9
Fuel Recommendations V-9
Fuel System V-2
Specifications V-2
Automotive with CM870 ..... V-2
Automotive, Industrial with CM570 and Power Generation without CM570 ..... V-2
General Engine V-1
Specifications V-1
Lubricating Oil Recommendations and Specifications V-10
AfterMarket Oil Additive Usage V-11
General Information V-10
Industrial Applications V-10
New Engine Break-in Oils V-11
Lubricating Oil System V-3
Specifications V-3

This Page Left Intentionally Blank

General Engine

Specifications

Listed below are general specifications for this engine.

Horsepower.....Refer to the engine dataplate.
Engine Speed.....Refer to the engine dataplate.
Engine Speed
400 to 450 hp.....1800 rpm
500 to 600 hp.....2000 rpm
Displacement.....15 liters [912 C.I.D.]
Bore and Stroke.....137 mm [5.40 in] x 169 mm [6.65 in]
Dry Engine Weight:
Power Generation.....1370 kg [3020 lb]
Industrial.....1524 kg [3360 lb]
Wet Engine Weight:
Power Generation.....1475 kg [3250 lb]
Industrial.....1628 kg [3590 lb]

Fuel System

Specifications

Automotive with CM870

Maximum Allowable Restriction to Pump with or without Fuel Cooler:
With Clean Filter.....203 mm Hg [8 in Hg]
With Dirty Filter.....305 mm Hg [12 in Hg]
Maximum Allowable Fuel Return Line Restriction.....229 mm Hg [9 in Hg]
Minimum Allowable Fuel Tank Vent Capability..... 2.0 m^3/hr [70 ft^3/hr]
Maximum Allowable Fuel Inlet Temperature.....71°C [160°F]
Fuel Shutoff Solenoids' Resistance.....6 to 10 ohms
Maximum Allowable Pressure Drop Across Pressure Fuel Filter.....517 kPa [75 psi]

Automotive, Industrial with CM570 and Power Generation without CM570

Maximum Allowable Fuel Return Line Restriction.....229 mm Hg [9 in Hg]
Minimum Allowable Fuel Tank Vent Capability..... 2.0 m^3/hr [70 ft^3/hr]
Maximum Allowable Fuel Inlet Temperature.....71°C [160°F]
Fuel Shutoff Solenoids' Resistance.....6 to 10 ohms

Maximum Allowable Inlet Restriction at the IFSM - high idle, no load:
Upper Location.....355 mm Hg [14 in Hg]
Lower Location.....305 mm Hg [12 in Hg]

Maximum Allowable Inlet Restriction at OEM Fuel Inlet:
Without Remote Mount Filter.....76 mm Hg [3 in Hg]
With Remote Mount Filter.....254 mm Hg [10 in Hg]

Lubricating Oil System

Specifications

Oil Pressure at Idle (minimum allowable at 93°C [200°F] oil temperature).....103 kPa [15 psi]
Oil Pressure at No-Load Governed Speed (automotive and industrial **only**).....241 to 276 kPa [35 to 40 psi]
Oil Capacity of Standard Engine:
Combination Full-Flow/Bypass Filter Capacity.....3.78 liters [1 gal]
Oil Capacity of Standard Engine:
Oil Pan Capacity: Automotive and Industrial
High.....41.6 liters [11 gal]
Low.....34.1 liters [9 gal]
Oil Capacity of Standard Engine:
Oil Pan Capacity: Power Generation (for oil pan option OP1493)
High.....83.3 liters [22 gal]
Low.....72.0 liters [19 gal]
Oil Capacity of Standard Engine:
Oil Change Capacity (oil pan and filter filled to capacity):
Automotive and Industrial.....45.4 liters [12 gal]
Power Generation (for oil pan option OP1493).....87.0 liters [23 gal]
Total Lubricating Oil System Capacity Including Filter:
Automotive and Industrial.....45.4 liters [12 gal]
Power Generation (for oil pan option OP1493).....98.4 liters [26 gal]
Oil Pressure Range:
Cold Engine.....Up to 900 kPa [130 psi]
Warm Engine.....241 to 276 kPa [35 to 40 psi]

General Information

Cummins Inc. recommends the use of fully-formulated antifreeze or coolant containing a precharge of supplemental coolant additive (SCA). The antifreeze or coolant **must** meet the specifications outlined in The Maintenance Council (TMC) Recommended Practice (RP) 329 (ethylene glycol) or RP 330 (propylene glycol). The use of fully-formulated antifreeze or coolant significantly simplifies cooling system maintenance.

Copies of TMC specifications can be obtained through Cummins Inc., or by contacting:

The Maintenance Council
American Trucking Association
2200 Mill Road
Alexandria, VA 33314-5388
Phone: (703) 838-1763
Fax (703) 836-6070

Fully-formulated antifreeze contains balanced amounts of antifreeze, SCA, and buffering compounds, but does **not** contain 50 percent water. Fully-formulated coolant contains balanced amounts of antifreeze, SCA, and buffering compounds already premixed 50/50 with deionized water.

The following pages explain water, antifreeze, and SCA's and how to test antifreeze and SCA levels.

This section also contains information on cooling system maintenance and a coolant treatment chart that is used to determine the correct SCA service filter.

Alternative maintenance practices for cooling systems can be found in Cummins Coolant Requirements and Maintenance, Bulletin 3666132.

Air Intake System

Specifications

⚠CAUTION⚠

Engine intake air must be filtered to prevent dirt and debris from entering the engine. If air intake piping is damaged or loose, unfiltered air will enter the engine and cause premature wear.

Industrial and Generator Drive

Maximum Temperature Rise between Ambient Air and Engine Air Inlet (ambient above 0°C [32°F])
Industrial.....-1°C [30°F]
Maximum Inlet Restriction (clean filter) Normal-Duty Element:
Industrial.....250 mm H_2O [10 in H_2O]
Power Generation.....381 mm H_2O [15 in H_2O]
Maximum Inlet Restriction (dirty filter).....635 mm H_2O [25 in H_2O]
Maximum Allowable Pressure Drop across Charge Air Cooler:
Industrial
psi.....14 kPa [2 psi]
Hg (mercury).....102 mm Hg [4 in Hg]
Maximum Allowable Pressure Drop from Turbocharger Outlet to Intake Manifold:
Power Generation:
psi.....14 kPa [2 psi]
Hg (mercury).....102 mm Hg [4 in Hg]
Four-Step Wastegate Controller Solenoid Resistance.....7 to 8 ohms

Exhaust System

Specifications

Industrial and Generator Drive

Maximum Allowable Exhaust Back Pressure Created by Piping and Silencer:

Industrial:

Hg (mercury).....76 mm Hg [3 in Hg]

H_2O (water).....1016 mm H_2O [40 in H_2O]

Maximum Allowable Exhaust Back Pressure Created by Piping and Silencer:

Power Generation:

Hg (mercury).....51 mm Hg [2 in Hg]

H_2O (water).....682 mm H_2O [27 in H_2O]

Exhaust Pipe Size (normally acceptable inside diameter):

Industrial.....127 mm [5 in]

Power Generation.....152 mm [6 in]

Electrical System

Specifications

Minimum Recommended Battery Capacity:

System Voltage	Ambient Temperatures	
	-18°C [0°F]	
	Cold Cranking Amperes	**Reserve Capacity* Amperes**
12 VDC		
Automotive and Power Generation	1800	540
Industrial	2700	360
24 VDC**		
Automotive and Power Generation	900	270
Industrial	1350	360

* The number of plates within a given battery size determines reserve capacity. Reserve capacity determines the length of time that sustained cranking can occur.

**CCA ratings are based on two 12-VDC batteries in series.

A minimum of 6 VDC at the OEM connector is required to power up the ECM.

Minimum Battery Capacity:
12-VDC Starter.....400 ampere-hours to 1800 cold cranking amps @ -18°C [0°F]
24-VDC Starter.....200 ampere-hours to 900 cold cranking amps @ -18°C [0°F]
Maximum Starting Circuit Resistance:
12-VDC Starter.....0.00075 ohm
24-VDC Starter.....0.00200 ohm
Battery Cable Sizes - American Wire Gauge (maximum length in cranking motor circuit):
12-VDC:
No. 00.....3.7 m [12 ft]
No. 000.....4.9 m [16 ft]
No. 0000 or Two No. 0*.....6.1 m [20 ft]
Two No. 00.....7.6 m [25 ft]
Battery Cable Sizes - American Wire Gauge (maximum length in cranking motor circuit):
12-VDC High Output:
No. 00.....2.1 m [7 ft]
No. 000.....2.7 m [9 ft]
No. 0000 or Two No. 0*.....3.7 m [12 ft]
Two No. 00.....4.3 m [14 ft]
Battery Cable Sizes - American Wire Gauge (maximum length in cranking motor circuit):
24 to 32 VDC:
No. 00.....6.1 m [20 ft]
No. 000.....8.2 m [27 ft]
No. 0000 or Two No. 0*.....10.7 m [35 ft]
Two No. 00.....13.7 m [45 ft]
Minimum Ambient Air Temperature without Starting Aid.....-1°C [30°F]
Minimum Cranking Speed without Starting Aid.....130 rpm

* Two strands of No. 0 cable can be used in place of one No. 0000 cable, provided that connections are carefully made to make sure equal current flow exists in each parallel cable.

Cummins/Fleetguard® Filter Specifications

Specifications

Fleetguard® is a subsidiary of Cummins Inc. Fleetguard® filters are developed through joint testing at Cummins Inc. and Fleetguard®. Fleetguard® filters are standard on new Cummins Inc. engines. Cummins Inc. recommends their use.

Fleetguard® products met all Cummins Inc. Source Approval Test standards to provide the quality filtration necessary to achieve the engine's design life. If other brands are substituted, the purchaser **must** insist on products that the supplier has tested to meet Cummins Inc. high quality standards.

Cummins can **not** be responsible for problems caused by; nongenuine filters that do **not** meet Cummins' performance or durability requirements.

Cummins Inc. requires a lubricating oil filter be used that meets Cummins Source Approval Method 10,765.

Filter Type	
Lubricating Oil Filter	
Cummins Part Number	3406810 and 3406809
Fleetguard® Part Number	LF9000 and LF9001
Fuel-Water Separator	
Cummins Part Number	4010650 and 4010651
Fleetguard® Part Number	FS1007 and FS1040
Coolant Filter	
Fleetguard® Part Number	WF2125[1] WF2126[2] WF2127[3]

1. This filter is designed for use with Fleetguard®'s extended service cooling system, which extends cooling system service to 1 year, 150,000 miles, or 4000 hours, whichever comes first. This filter is used for cooling systems up to 20 gallons. Refer to Coolant Requirements and Maintenance, Bulletin 3666132. Fleetguard® ES coolant **must** be used for all fill and top-off, which is critical for extended cooling system maintenance intervals.
2. This filter is designed for extended service intervals up to 50,000 miles when using TMC RP329 or RP330 coolants and is used for cooling systems up to 20 gallons. Refer to Coolant Requirements and Maintenance, Bulletin 3666132.
3. This filter has been designed for extended service intervals of 50,000 to 150,000 miles. It has no chemical additives and can be used in the following systems:

- Cooling systems above 20 gallons in capacity.
- See maintenance chart below.

When using WF2127 filter, the following volumes of treatment **must** be added at the designated mileages:

Cooling System Capacity	50,000-Mile Service Interval with RP329/330 Coolant or Treated Water (Fleetcool or DCA4)	150,000-Mile Service Interval with ES Coolant (ES Liquid)
0 to 20 gallons	1 qt (10 units)	1 qt (15 units)
20 to 40 gallons	2 qt (20 units)	2 qt (30 units)
40 to 60 gallons	3 qt (30 units)	3 qt (45 units)
60 to 80 gallons	4 qt (40 units)	4 qt (60 units)
80 to 100 gallons	5 qt (50 units)	5 qt (75 units)

NOTE: Filters **must** meet Cummins SAM 10,769. Fleetguard® filters meet Cummins SAM 10,769. The standard filter for the Signature engine is Fleetguard® WF2126. For systems larger than 100 gallons, use 1 quart per 15 gallons. Consult vehicle manufacturer for total cooling system capacity.

Fuel Recommendations and Specifications

Fuel Recommendations

⚠WARNING⚠

Do not bleed the fuel system of a hot engine; this can result in fuel spilling onto a hot exhaust manifold, which can cause a fire.

⚠CAUTION⚠

Due to the precise tolerances of diesel injection systems, it is extremely important that the fuel be kept clean and free of dirt or water. Dirt or water in the system can cause severe damage to both the fuel pump and the fuel injectors.

⚠CAUTION⚠

Do not use diesel fuel blended with lubricating oil in engines equipped with an aftertreatment device. Service intervals for aftertreatment devices will be reduced.

Fuel Recommended Properties

Cummins Inc. recommends the use of fuels that meet the following specifications:

Property	Recommended Specifications
Viscosity (ASTM D445)	1.3 to 4.1 centistokes [1.3 to 4.1 mm per second] at 40°C [104°F].
Cetane Number (ASTM D613)	40 Minimum above 0°C [32°F]. 45 Minimum below 0°C [32° F].
Sulfur Content (ASTMD129 or 1552)	**Not** to exceed 0.05 mass percent for engines without aftertreatment devices. For engines with aftertreatment devices, sulfur content can **not** exceed 0.0015 (15 ppm) mass percent.
Active Sulfur (ASTM D130)	Copper Strip Corrosion **not** to exceed Number 3 rating after three hours at 50°C [122°F].
Water and Sediment (ASTM D1796)	**Not** to exceed 0.05 volume percent.
Carbon Residue (Rams bottom, ASTM D524 or Conradson, ASTM D189)	**Not** to exceed 0.35 mass percent on 10 volume percent residuum.
Density (ASTM D287)	42 to 30° API gravity at 0.816 to 0.876 g/cc at 15°C [60°F].
Cloud Point (ASTM D97)	6°C [10°F] below lowest ambient temperature at which the fuel is expected to operate.
Ash (ASTM D482)	**Not** to exceed 0.02 mass percent (0.05 mass percent with lubricating oil blending). Oil blending is prohibited on engines with aftertreatment devices.
Distillation (ASTM D86)	The distillation curve **must** be smooth and continuous.
Acid Number (ASTM D664)	**Not** to exceed 0.1 mg KOA per 100 ml.

1. For additonal information on fuel recommendations and specifications, refer to Fuel for Cummins Engines, Bulletin 3379001. See ordering information in the back of this manual.

Lubricating Oil Recommendations and Specifications

General Information

Industrial Applications

The use of high-quality engine lubricating oils and appropriate oil drain and filter change intervals are critical factors in maintaining engine performance and durability.

Cummins Inc. recommends the use of a high-quality 15W-40 multiviscosity heavy-duty engine oil that meets the requirements in Cummins Engineering Specification CES 20071 or CES 20076 (such as Valvoline® Premium Blue® or Premium Blue® 2000). American Petroleum Institute (API) specification CH-4 can be used as an alternative to CES 20071. Oils that meet API specification CG-4 can be used, but at a reduced drain interval according to the Oil Drain Intervals chart listed in Section 2. The oil grades CC, CD, CE, and CF have been obsoleted by API and **must not** be used.

Shortened drain intervals can be required with monograde oils as determined by close monitoring of the oil condition with scheduled oil sampling. Use of single-grade oils can affect engine oil control.

Synthetic engine oils, API category III, are recommended for use in Cummins engines operating in ambient temperature conditions consistently below -25°C [-13°F]. Above this temperature, petroleum-based multigrade lubricants are recommended. Synthetic 0W-30 oils that meet API category III can be used in operations where the ambient temperature **never** exceeds 0°C [32°F]. Multiviscosity oils rated 0W-30 do **not** offer the same level of protection against fuel dilution as do higher multigrade oils. Higher cylinder wear can be experienced when using 0W-30 oils in high-load situations.

For further details and an explanation of engine lubricating oils for Cummins engines, refer to Cummins Engine Oil Recommendations, Bulletin 3810340.

Additional information regarding lubricating oil availability throughout the world is available in the Engine Manufacturing Association (EMA) Lubricating Oils Data Book for Heavy-Duty Automotive and Industrial Engines. The data book can be ordered from Engine Manufacturers Association, Two North LaSalle Street, Chicago, IL 60602; (312) 827-8733, (321) 827-8700, (www.engine-manufacturers.org).

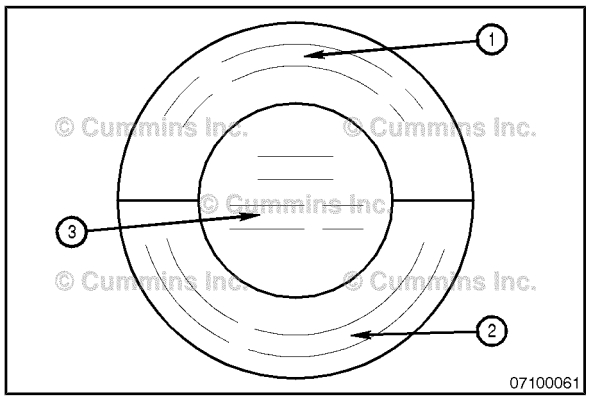

The API service symbols are shown in the accompanying illustration.

1. The upper half of the symbols displays the appropriate oil categories.
2. The lower half contains words to describe oil energy-conserving features.
3. The center section identifies the SAE oil viscosity grade.

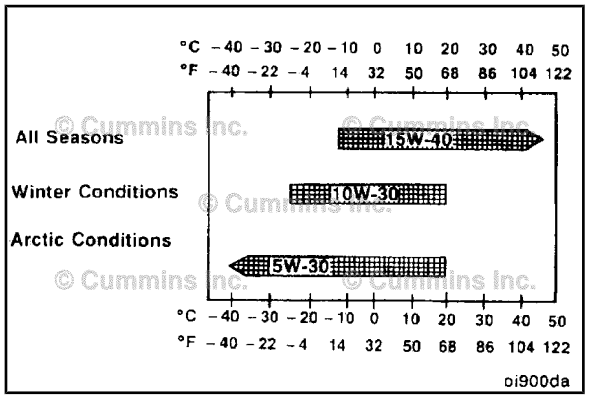

Oil viscosity should be chosen according to the typical climate conditions experienced by the user. Use of 15W-40 is recommended for the best engine durability at higher ambient temperature. For temperate or cold conditions, 10W-30 or 5W-30 viscosity can be used for easier starting, improved oil flow, and improved fuel economy.

AfterMarket Oil Additive Usage

Cummins Inc. does **not** recommend the use of aftermarket oil additives. Current high-quality fully additive engine lubricating oils are very sophisticated, with precise amounts of additives blended into the lubricating oil to meet stringent requirements defined in 1) Cummins Engineering Specification CES 20076 that is similar to API CH-4, in 2) CES 20078 that is similar to API CI-4, and in 3) CES 20081 that is similar to API CJ-4. These furnished oils meet performance characteristics that conform to the lubricant industry standards. Aftermarket lubricating oil additives are **not** necessary to enhance engine oil performance and in some cases can reduce the finished oil's capability to protect the engine.

New Engine Break-in Oils

Special "break-in" engine lubricating oils are **not** recommended for new or rebuilt Cummins® engines. Use the same lubricating oil that will be used during normal operation.

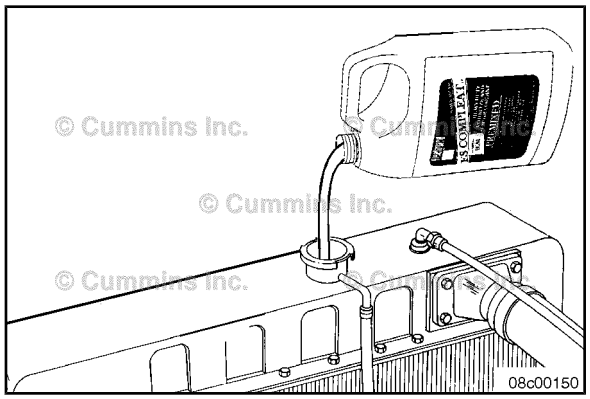

Coolant Recommendations and Specifications

Fully Formulated Coolant/Antifreeze

Cummins Inc. recommends using either a 50/50 mixture of good-quality water and fully formulated antifreeze, or fully formulated coolant when filling the cooling system. The fully formulated antifreeze or coolant **must** meet TMC RP329 or TMC RP330 specifications.

NOTE: Use of products meeting TMC RP329 or RP330 is necessary for 50,000-mile and 150,000-mile service intervals.

NOTE: Low-silicate antifreeze meeting ASTM D4985 is inadequate for these extended service intervals.

Good-quality water is important for cooling system performance. Excessive levels of calcium and magnesium contribute to scaling problems, and excessive levels of chlorides and sulfates cause cooling system corrosion.

Water Quality	
Calcium Magnesium (Hardness)	Maximum 170 ppm as ($CaCO_3$ + $MgCO_3$)
Chloride	40 ppm as (Cl)
Sulfate	100 ppm as (SO_4)



Cummins Inc. recommends using Fleetguard® COMPLEAT ES. It is available in glycol forms (ethylene and propylene) and complies with TMC RP329 and RP330 standards.

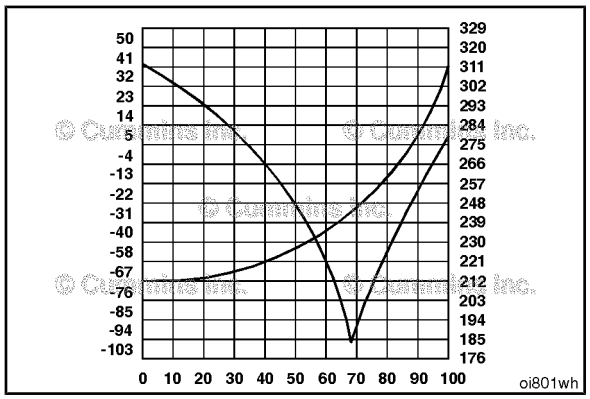

Fully formulated antifreeze **must** be mixed with quality water at a 50/50 ratio (40-percent to 60-percent working range). A 50/50 mixture of antifreeze and water gives a -36°C [-34°F] freezing point and a 110°C [228°F] boiling point, which is adequate for locations in North America. The actual lowest freezing point of ethylene glycol antifreeze is 68 percent. Using higher concentrations of antifreeze will raise the freezing point of the solution and increase the possibility of a silica gel problem.

A refractometer **must** be used to measure the freezing point of the coolant **accurately**.

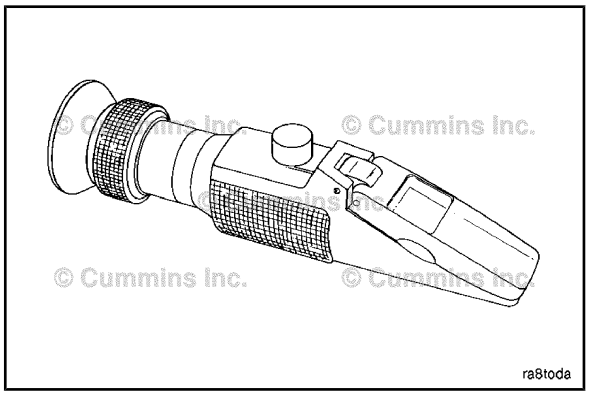

Do **not** use a floating ball hydrometer. Using a floating ball hydrometer can give an incorrect reading.

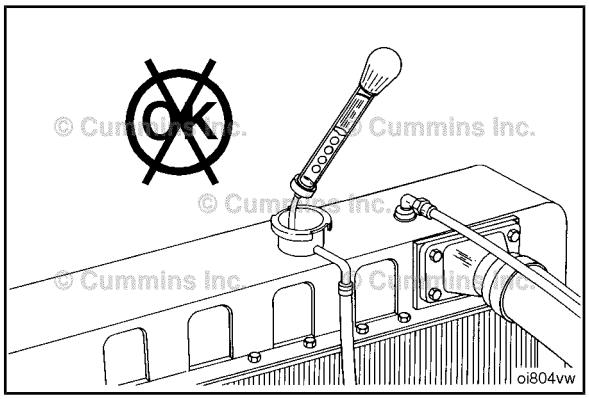

Cooling System Sealing Additives

Do **not** use sealing additives in the cooling systems. The use of sealing additives can:

- Build up in coolant low-flow areas
- Clog coolant filters
- Plug radiator and oil cooler.

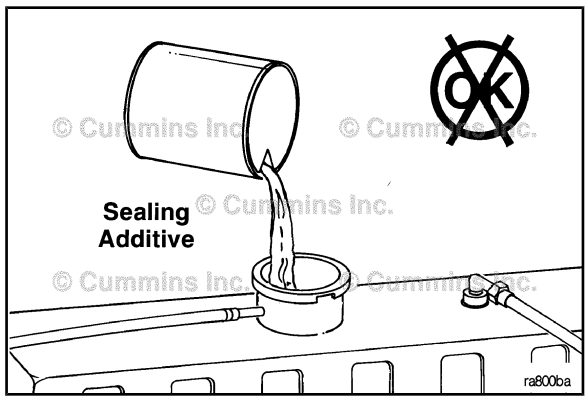

Cooling System Soluble Oils

Do **not** use soluble oils in the cooling system. The use of soluble oils can:

- Allow cylinder liner pitting
- Corrode brass, aluminum, and copper
- Damage heat transfer surfaces
- Damage seals and hoses.

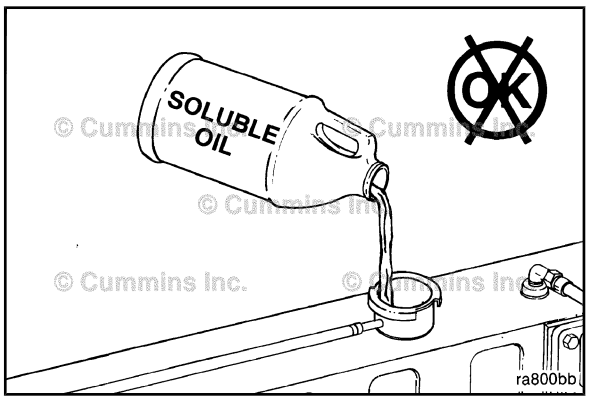

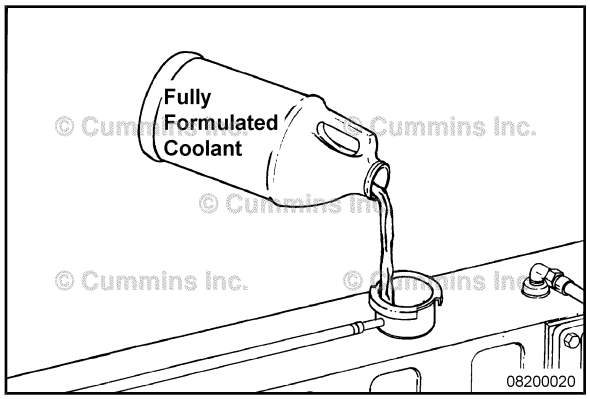

Supplemental Coolant Additive (SCA)

⚠CAUTION⚠

The Signature, ISX, and QSX15 engines use aluminum parts that are in contact with the coolant. Improper coolant, coolant filter selection, and maintenance will likely result in perforation of one of these parts. Insufficient concentration of the coolant additives will result in liner pitting and engine failure.

Fully formulated products contain SCAs and are required to protect the cooling system from scale and fouling, solder corrosion, and general corrosion. The coolant filter is required to protect the cooling system from abrasive materials, debris, and precipitated coolant additives.

Fleetguard® DCA4 Service Filters and Liquid Precharge

Signature, ISX, and QSX15 Series Coolant Filter Options

WF2125 - This filter is designed for use with Fleetguard®'s extended service cooling system, which extends cooling system service to 1 year, 150,000 miles, or 4000 hours, whichever comes first. This filter is used for cooling systems up to 20 gallons. Refer to Coolant Requirements and Maintenance, Bulletin 3666132. Fleetguard® ES coolant **must** be used for all fill and top-off, which is critical for extended cooling system maintenance intervals.

WF2126 - This filter is designed for extended service intervals up to 50,000 miles when using TMC RP329 or RP330 coolants and is used for cooling systems up to 20 gallons. Refer to Coolant Requirements and Maintenance, Bulletin 3666132.

WF2127 - This filter has been designed for extended service intervals of 50,000 to 150,000 miles. It has no chemical additives and can be used in the following systems:

- Cooling systems above 20 gallons in capacity.
- See maintenance chart below.

When using WF2127 filter, the following volumes of treatment **must** be added at the designated mileages:

Cooling System Capacity	50,000-Mile Service Interval with RP329/330 Coolant or Treated Water (Fleetcool or DCA4)	150,000-Mile Service Interval with ES Coolant (ES Liquid)
0 to 20 gallons	1 qt (10 units)	1 qt (15 units)
20 to 40 gallons	2 qt (20 units)	2 qt (30 units)
40 to 60 gallons	3 qt (30 units)	3 qt (45 units)
60 to 80 gallons	4 qt (40 units)	4 qt (60 units)
80 to 100 gallons	5 qt (50 units)	5 qt (75 units)

NOTE: Filters **must** meet Cummins SAM 10,769. Fleetguard® filters meet Cummins SAM 10,769. The standard filter for the Signature engine is Fleetguard® WF2126. For systems larger than 100 gallons, use 1 quart per 15 gallons. Consult vehicle manufacturer for total cooling system capacity.

Testing SCA Concentration Level CC-2602 Test Kit

Precautions and Instructions for Proper Kit Use

Carefully follow the instructions to test the coolant. Take the appropriate action recommended by the kit.

- The coolant sample to be tested **must** be between 10 and 54 °C [50 and 130°F]. If the sample is too cold or too hot, you will get incorrect results.
- To get the best color match results, compare test strip pads to the color chart in daylight or under cool white fluorescent lighting. If unsure about a specific color match when a test does fall between two colors on the color chart, choose the lower numbered (or lettered) block. It is safer to underestimate your results than to overestimate.
- The test strips do have a limited shelf life and are sensitive to humidity and extreme heat. Proper handling and storage is necessary to protect the life of the strips.
- Keep the cap tightly sealed on the test strip bottle **except** when removing a strip. Store away from direct sunlight and in an area where the temperature will generally stay below 32°C [90°F].
- Do **not** use the test strips after the expiration date stamped on the bottle.

- Discard the kit if the top pad on the unused strips have turned light brown.
- Use one strip at a time and take care **not** to touch any of the pads on the strip. Doing so will contaminate the pads and skew the test results.
- If the strip container is left uncapped for 24 hours, moisture in the air will render the strips useless, even though no discoloration will be evident.
- **Only** use the color chart supplied with the kit.
- Following the correct test times is very important. Use a clock or stopwatch.
- Do **not** utilize the test kit to maintain minimum SCA concentration levels (i.e., 1.5 units).
- When performing service that requires draining the cooling system, take special precautions to collect coolant in a clean non-galvanized container, seal coolant to prevent contamination, and save for reuse.

Coolant Testing

- Probablizer:
  - 3318169S Plug - Installs on the engine for easy coolant sampling
  - 3318168S Cap - Use with Monitor C bottle to sample coolant
  - CC2700 Monitor C™ - Use lab analysis of coolant samples for more detailed analysis.

CC2602 Coolant Test Kit

- Works with any SCA formulation. Call 1-800-22FILTER (800-223-4583) if you have this test kit and the color chart does **not** show the number of units of SCA gallon of coolant.)

Test Intervals

⚠ WARNING ⚠

Do not remove the pressure cap from a hot engine. Wait until coolant temperature is below 50°C [120°F] before removing the pressure cap. Heated coolant spray or steam can cause personal injury.

Testing is recommended if the operator is **not** sure of his cooling system condition due to leaks, uncontrolled topping off of the system, or major coolant loss.

If the concentration is below 1.2 units per gallon, replace the filter and precharge with liquid.

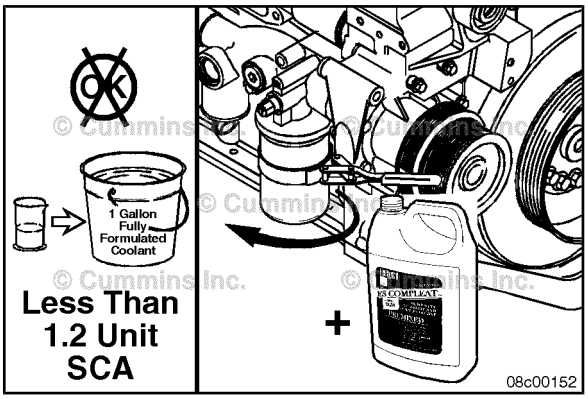

Check the SCA concentration level at least every 6 months, and anytime the coolant condition is unknown or corrosion is apparent within the cooling system.

Use Fleetguard® coolant test kit, CC2602, to check the concentration level. Instructions are included with the test kit.

Call the following numbers to get answers to any questions you have about cooling system maintenance:

Cummins	Fleetguard®
1-800-DIESELS	**1-800-22FILTER**
1-800-343-7357	**1-800-223-4583**

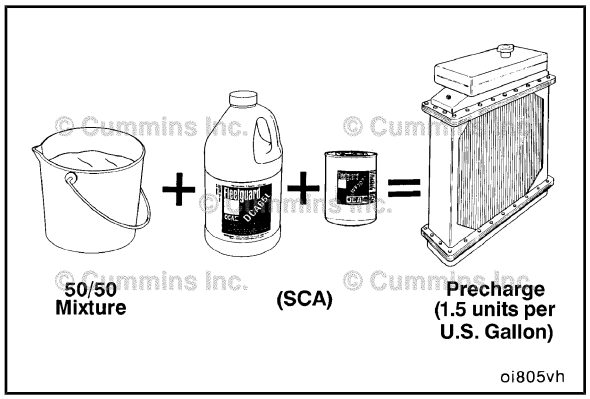

Coolant Replacement Requirements

Drain and flush the cooling system after 6000 hours or 3 years of service. However, if Fleetguard®'s ES coolant and ES filters are used, check chloride, sulfate, and pH levels according to Coolant Requirements and Maintenance, Bulletin 3666132, to determine whether the coolant **must** be replaced. Refill with either new fully formulated coolant or ES coolant.

NOTE: Dispose of used coolant/antifreeze in accordance with federal, state, and local laws and regulations.

Drive Belt Tension

Tension Chart

SAE Belt Size	Belt Tension Gauge Part No.		Belt Tension New		Belt Tension Range Used*	
	Click-type	Burroughs	N	lbf	N	lbf
0.380 in	3822524		620	140	270 to 490	60 to 110
0.440 in	3822524		620	140	270 to 490	60 to 110
1/2 in	3822524	ST-1138	620	140	270 to 490	60 to 110
11/16 in	3822524	ST-1138	620	140	270 to 490	60 to 110
3/4 in	3822524	ST-1138	620	140	270 to 490	60 to 110
7/8 in	3822524	ST-1138	620	140	270 to 490	60 to 110
4 rib	3822524	ST-1138	620	140	270 to 490	60 to 110
5 rib	3822524	ST-1138	670	150	270 to 530	60 to 120
6 rib	3822525	ST-1293	710	160	290 to 580	65 to 130
8 rib	3822525	ST-1293	890	200	360 to 710	80 to 160
10 rib	3822525	3823138	1110	250	440 to 890	100 to 200
12 rib	3822525	3823138	1330	300	530 to 1070	120 to 240
12 rib K section	3822525	3823138	1330	300	890 to 1070	200 to 240

NOTE: This chart does not apply to automatic belt tensioners.

* A belt is considered used if it has been in service for ten minutes or longer.

* If used belt tension is less than the minimum value, tighten the belt to the maximum used belt value.

Engine Component Torque Values

General Information

Component	Wrench Size	Torque Value	
		N•m	ft-lb
Oil Pan Drain Plug		47	35
Rocker Cover Capscrews	10 mm	25	16
Air Intake Piping V-Band Clamps	7/16	8.5	75 in-lb
Injector Adjusting Screw Locknut	24 mm	75	55
Injector Adjusting Screw	8 mm	8	70 in-lb
Valve Adjusting Screw	6 mm	.6	5 in-lb
Valve Adjusting Screw Locknut	19 mm	45	33
Engine Brake Adjusting Screw	3 mm	N/A	N/A
Engine Brake Adjusting Screw Locknut	13 mm	20	15
Turbocharger Oil Drain Capscrews	13 mm	25	16
Turbocharger Male Union Elbow	22 mm	30	22
Turbocharger Oil Supply Line Fitting	21 mm	30	22
Turbocharger V-Band Clamps	7/16	8.5	75 in-lb
Turbocharger Mounting Nuts	15 mm	60	45
Crankcase Breather Cover Bolts	6 mm	.68	6 in-lb
Aftertreatment V-Band Clamps	10 mm	20	180 in-lb
Differential Pressure Sensing Tube Nuts	5/8	55	40
Aftertreatment Mounting Capscrews	10 mm	20	180 in-lb

Capscrew Markings and Torque Values

General Information

⚠CAUTION⚠

When replacing capscrews, always use a capscrew of the same measurement and strength as the capscrew being replaced. Using the wrong capscrews can result in engine damage.

Metric capscrews and nuts are identified by the grade number stamped on the head of the capscrew or on the surface of the nuts. U.S. Customary capscrews are identified by radial lines stamped on the head of the capscrew.

The following examples indicate how capscrews are identified:

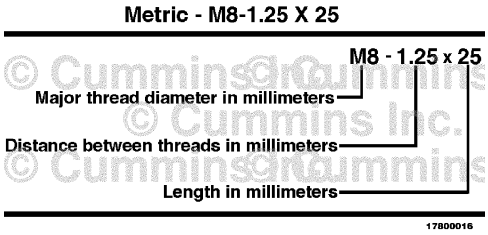

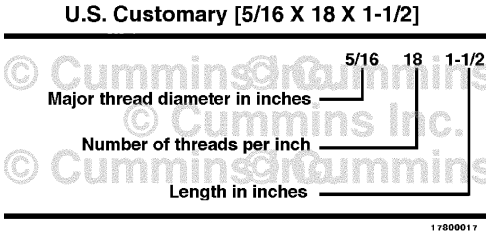

NOTES:

1. **Always** use the torque values listed in the following tables when specific torque values are **not** available.
2. Do **not** use the torque values in place of those specified in other sections of this manual.
3. The torque values in the table are based on the use of lubricated threads.
4. When the ft-lb value is less than 10, convert the ft-lb value to in-lb to obtain a better torque with an in-lb torque wrench. Example: 6 ft-lb equals 72 in-lb.

Capscrew Markings and Torque Values - Metric

Commercial Steel Class	8.8	10.9	12.9
Capscrew Head Markings	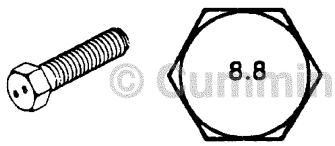	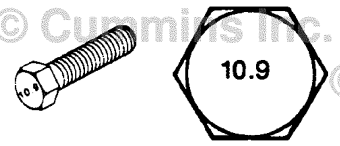	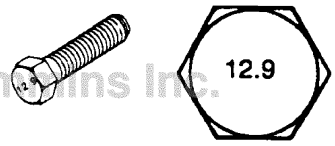

Body Size	Torque				Torque				Torque			
Diameter	Cast Iron		Aluminum		Cast Iron		Aluminum		Cast Iron		Aluminum	
mm	N•m	ft-lb	N•m	ft-lb	N•m	ft-lb	N•m	ft-lb	N•m	ft-lb	N•m	ft-lb
6	9	5	7	4	13	10	7	4	14	9	7	4
7	14	9	11	7	18	14	11	7	23	18	11	7
8	23	17	18	14	33	25	18	14	40	29	18	14
10	45	33	30	25	65	50	30	25	70	50	30	25
12	80	60	55	40	115	85	55	40	125	95	55	40
14	125	90	90	65	180	133	90	65	195	145	90	65
16	195	140	140	100	280	200	140	100	290	210	140	100
18	280	200	180	135	390	285	180	135	400	290	180	135
20	400	290	—	—	550	400	—	—	—	—	—	—

Capscrew Markings and Torque Values - U.S. Customary

SAE Grade Number	**5**	**8**
Capscrew Head Markings These are all SAE Grade 5 (3 line)		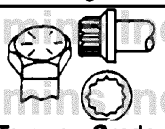

© Cummins Inc.

	Capscrew Torque - Grade 5 Capscrew				**Capscrew Torque - Grade 8 Capscrew**			
Capscrew Body Size	Cast Iron		Aluminum		Cast Iron		Aluminum	
	N•m	**ft-lb**	**N•m**	**ft-lb**	**N•m**	**ft-lb**	**N•m**	**ft-lb**
1/4 - 20	9	7	8	6	15	11	8	6
1/4 - 28	12	9	9	7	18	13	9	7
5/16 - 18	20	15	16	12	30	22	16	12
5/16 - 24	23	17	19	14	33	24	19	14
3/8 - 16	40	30	25	20	55	40	25	20
3/8 - 24	40	30	35	25	60	45	35	25
7/16 - 14	60	45	45	35	90	65	45	35
7/16 - 20	65	50	55	40	95	70	55	40
1/2 - 13	95	70	75	55	130	95	75	55
1/2 - 20	100	75	80	60	150	110	80	60
9/16 - 12	135	100	110	80	190	140	110	80
9/16 - 18	150	110	115	85	210	155	115	85
5/8 - 11	180	135	150	110	255	190	150	110
5/8 - 18	210	155	160	120	290	215	160	120
3/4 - 10	325	240	255	190	460	340	255	190
3/4 - 16	365	270	285	210	515	380	285	210
7/8 - 9	490	360	380	280	745	550	380	280
7/8 - 14	530	390	420	310	825	610	420	310
1 - 8	720	530	570	420	1100	820	570	420
1 - 14	800	590	650	480	1200	890	650	480

Section W - Warranty

Section Contents

Page
All Engines InternationalIndustrial (Off-Highway) W-7
All Engines United States and CanadaIndustrial (Off-Highway) W-4
All Diesel EnginesWorldwideGenerator Drive W-1
All Engines WorldwideCommercial Marine PropulsionAuxiliary Products W-9
California Emission Control System Warranty, Off-Highway W-13

This Page Left Intentionally Blank

All Diesel EnginesWorldwideGenerator Drive

Engines Warranted

This warranty applies to new Engines sold by Cummins and delivered to the first user on or after April 1, 1999 that are used in generator drive application anywhere in the world where Cummins approved service is available. These Engines will have the following rating designations:

Standby Power Rating

Engines of this rating are applicable for supplying emergency power for the duration of the utility power outage. No overload capability is available for this rating. Under no condition is an Engine allowed to operate in parallel with the public utility at the Standby Power rating. This rating should be applied where reliable utility power is available. A standby rated engine is to be sized for a maximum of an 80 percent average load factor and 200 hours of operation per year. This includes less than 25 hours per year at the Standby Power rating. Standby rating should never be applied except in true emergency power outages. Negotiated power outages contracted with a utility company are not considered an emergency.

Unlimited Time Running Prime Power Rating

Engines with this rating are available for an unlimited number of hours per year in a variable load application. Variable load is not to exceed a 70 percent average of the Prime Power Rating during any operating period of 250 hours. Total operating time at 100 percent Prime Power shall not exceed 500 hours per year.

A 10 percent overload capability is available for a period of one hour within a twelve hour period of operation. Total operating time at the 10 percent overload power shall not exceed 25 hours per year.

Limited Time Running Prime Power Rating

Engines of this rating are available for a limited number of hours in a non-variable load application. It is intended for use in situations where power outages are contracted, such as in utility power curtailment. Engines may be operated in parallel to the public utility up to 750 hours per year at power levels never to exceed the Prime Power rating.

Limited Time Running Prime Power ratings differ from Unlimited Time Running in that even though the maximum power output of the engines are the same, the Limited Time Running allows the Engine to be parallel to Public Utility and run at the full Prime Power rating and must never exceed the Prime Power rating.

Continuous/Base Power Rating

Engines with this rating are available for supplying utility power at a constant 100 percent load for an unlimited number of hours per year. No overload capability is available for this rating.

Continuous/Base Power ratings differ from Unlimited Time Running Prime Power ratings in that the Continuous/Base Load ratings are significantly reduced from the Prime Power ratings. Continuous/Base Load ratings have no load factor or application restrictions.

Coverage

Base Engine Warranty

This warranty covers any failures of the Engine, under normal use and service, which result from a defect in material or factory workmanship (Warrantable Failure).

Coverage begins with the sale of the Engine by Cummins and continues for the Duration stated below. The Duration commences either on the date of delivery of the Engine to the first user, or on the date the Engine is first leased, rented or loaned, or when the Engine has been operated for 50 hours, whichever occurs first.

Base Engine Warranty

	Duration Whichever Occurs First	
Rating	**Months**	**Hours**
Standby Power	24	400
Unlimited Prime Power	12	Unlimited
Limited Prime Power	12	750
Continuous/Base Power	12	Unlimited

Extended Major Components Warranty

The Extended Major Components Warranty applies to Engines other than B and C series and covers Warrantable Failures of the Engine cylinder block, camshaft, crankshaft and connecting rods (Covered Parts). Bushing and bearing

failures are not covered. This coverage begins with the expiration of the Base Engine Warranty and continues for the following stated Duration. The Duration commences either on the date of delivery of the Engine to the first user, or on the date the Engine is first leased, rented or loaned, or when the Engine has been operated for 50 hours, whichever occurs first.

Extended Major Components Warranty

	Duration Whichever Occurs First	
Rating	**Months**	**Hours**
Standby Power	36	600
Unlimited Prime Power	36	10,000
Limited Prime Power	36	2,250
Continuous/Base Power	36	10,000

Consumer Products

This warranty on Consumer Products in the United States is a LIMITED warranty. **CUMMINS IS NOT RESPONSIBLE FOR INCIDENTAL OR CONSEQUENTIAL DAMAGES.** Any implied warranties applicable to Consumer Products terminate concurrently with the expiration of the express warranties applicable to the product. In the United States, some states do not allow the exclusion of incidental or consequential damages, or limitations on how long an implied warranty lasts, so the limitations or exclusions herein may not apply to you.

These warranties are made to all Owners in the chain of distribution, and Coverage continues to all subsequent Owners until the end of the periods of Coverage.

Cummins Responsibilities

During Base Engine Warranty

Cummins will pay for all parts and labor needed to repair the damage to the Engine resulting from a Warrantable Failure when performed during normal business hours. All labor costs will be paid in accordance with Cummins published Standard Repair Time guidelines.

Cummins will pay for the lubricating oil, antifreeze, filter elements, and other maintenance items that are not reusable due to the Warrantable Failure.

Cummins will pay reasonable travel expenses for mechanics to travel to and from the Engine site, including meals, mileage, and lodging when the repair is performed at the site of the failure.

Cummins will pay reasonable labor costs for Engine removal and reinstallation when necessary to repair a Warrantable Failure.

During the Extended Major Components Warranty

Cummins will pay for the repair or, at its option, replacement of the defective Covered Part and any Covered Part damaged by a Warrantable Failure of the defective Covered Part.

Owner's Responsibilities

During the Base Engine Warranty

Owner is responsible for the cost of lubricating oil, antifreeze, filter elements and other maintenance items replaced during warranty repairs unless such items are not reusable due to the Warrantable Failure.

During the Extended Major Components Warranty

Owner is responsible for the cost of all labor needed to repair the Engine, including the labor cost for Engine removal and reinstallation. When Cummins elects to repair a part instead of replacing it, the Owner is not responsible for the labor needed to repair the part.

Owner is responsible for the cost of all parts required for the repair except for the defective Covered Part and any Covered Part damaged by a Warrantable Failure of the defective Covered Part.

Owner is responsible for the cost of lubricating oil, antifreeze, filter elements and other maintenance items replaced during repair of a Warrantable Failure.

During the Base Engine and Extended Major Components Warranties

Owner is responsible for the operation and maintenance of the Engine as specified in the applicable Cummins Operation and Maintenance Manual. Owner is also responsible for providing proof that all recommended maintenance has been performed.

Before the expiration of the applicable warranty, Owner must notify a Cummins distributor, authorized dealer or other repair location approved by Cummins of any Warrantable Failure and make the Engine available for repair by such facility. Locations in the United States* and Canada are listed in the Cummins United States and Canada Sales and Service Directory; other locations are listed in the Cummins International Sales and Service Directory.

Owner is responsible for communication expenses, meals, lodging and similar costs incurred as a result of a Warrantable Failure.

Owner is responsible for non-Engine repairs, "downtime" expenses, fines, all applicable taxes, all business costs and other losses resulting from a Warrantable Failure.

Owner is responsible for providing sufficient access to and reasonable ability to remove the Engine from the installation in the event of a Warrantable Failure.

Owner is responsible for maintaining an operating Engine hourmeter. If the hourmeter is not operational, engine usage will be estimated at 400 hours per month.

Limitations

Cummins is not responsible for failures or damage resulting from what Cummins determines to be abuse or neglect, including, but not limited to: operation without adequate coolants or lubricants; overfueling; overspeeding; lack of maintenance of lubricating, cooling or intake systems; improper storage, starting, warm-up, run-in or shutdown practices; unauthorized modifications to the Engine. Cummins is also not responsible for Engine performance problems or failures caused by incorrect oil or fuel, or by water, dirt or other contaminants in the fuel or oil.

This warranty does not apply to accessories supplied by Cummins which bear the name of another company. Such non-warranted accessories include, but are not limited to: alternators, starters, fans**, air conditioning compressors, clutches, filters, transmissions, air cleaners and safety shutdown switches.

Before a claim for excessive oil consumption will be considered, Owner must submit adequate documentation to show that consumption exceeds Cummins published standards.

Failure of belts and hoses supplied by Cummins are not covered beyond the first 500 hours or one year of operation, whichever occurs first after the warranty start date.

Parts used to repair a Warrantable Failure may be new Cummins parts, Cummins approved rebuilt parts, or repaired parts. Cummins is not responsible for failures resulting from the use of parts not approved by Cummins.

A new Cummins or Cummins-approved rebuilt part used to repair a Warrantable Failure assumes the identity of the part it replaced and is entitled to the remaining coverage hereunder.

Cummins is not responsible for Engine performance problems or failures resulting from:

1. Use or application of the Engine inconsistent with its rating designation as set forth above.
2. Inadequate or incorrect installations deviating from Cummins Generator Drive Installation Guidelines.

CUMMINS IS NOT RESPONSIBLE FOR WEAR OR WEAROUT OF COVERED PARTS.

CUMMINS IS NOT RESPONSIBLE FOR INCIDENTAL OR CONSEQUENTIAL DAMAGES.

THE WARRANTIES SET FORTH HEREIN ARE THE SOLE WARRANTIES MADE BY CUMMINS IN REGARD TO THESE ENGINES. CUMMINS MAKES NO OTHER WARRANTIES, EXPRESS OR IMPLIED, OR OF MERCHANTABILITY OR FITNESS FOR A PARTICULAR PURPOSE.

In the United States* and Canada, this warranty gives you specific legal rights, and you may also have other rights which vary from state to state.

Outside the United States* and Canada, in case of consumer sales, in some countries, the Owner has statutory rights which cannot be affected or limited by the terms of this warranty.

Nothing in this warranty excludes or restricts any contractual rights the owner may have against third parties.

* Includes American Samoa, the Commonwealth of Northern Mariana Islands, Guam, Puerto Rico, and the U.S. Virgin Islands.

** Alternators, starters, and fans ARE covered for the duration of the base engine warranty on B3.3 engines.

All Engines United States and CanadaIndustrial (Off-Highway)

Coverage

Products Warranted

This warranty applies to new Engines sold by Cummins and delivered to the first user on or after April 1, 1999, that are used in Industrial (Off-Highway) applications in the United States* and Canada, except for Engines used in marine, generator drive and certain defense applications, for which different warranty coverage is provided.

Base Engine Warranty

This warranty covers any failures of the Engine, under normal use and service, which result from a defect in material or factory workmanship (Warrantable Failures).

Coverage begins with the sale of the Engine by Cummins. Coverage continues for two years or 2,000 hours of operation, whichever occurs first, from the date of delivery of the Engine to the first user, or from the date the unit is first leased, rented or loaned, or when the Engine has been operated for 50 hours, whichever occurs first. If the 2,000 hour limit is exceeded during the first year, Coverage continues until the end of the first year.

Extended Major Components Warranty

The Extended Major Components Warranty covers Warrantable Failures of the Engine cylinder block, camshaft, crankshaft and connecting rods (Covered Parts).

Bushing and bearing failures are not covered.

This Coverage begins with the expiration of the Base Engine Warranty and ends three years or 10,000* hours of operation from the date of delivery of the Engine to the first user, or from the date the unit is first leased, rented or loaned, or from when the Engine has been operated for 50 hours, whichever occurs first.

*3,000 hours for A Series Engines.

Consumer Products

The warranty on Consumer Products in the United States is a LIMITED warranty. **CUMMINS IS NOT RESPONSIBLE FOR INCIDENTAL OR CONSEQUENTIAL DAMAGES.** Any implied warranties applicable to Consumer Products in the United States terminate concurrently with the expiration of the express warranties applicable to the product. In the United States, some states do not allow the exclusion of incidental or consequential damages, or limitations on how long an implied warranty lasts, so the limitations or exclusions herein may not apply to you.

These warranties are made to all Owners in the chain of distribution, and Coverage continues to all subsequent Owners until the end of the periods of Coverage.

Cummins' Responsibilities

During The Base Engine Warranty

Cummins will pay for all parts and labor needed to repair the damage to the Engine resulting from a Warrantable Failure.

Cummins will pay for the lubricating oil, antifreeze, filter elements, and other maintenance items that are not reusable due to the Warrantable Failure.

Cummins will pay reasonable costs for mechanics to travel to and from the equipment site, including meals, mileage and lodging, when the repair is performed at the site of the failure.

Cummins will pay reasonable labor costs for Engine removal and reinstallation when necessary to repair a Warrantable Failure.

During The Extended Major Components Warranty

Cummins will pay for the repair or, at its option, replacement of the defective Covered Part and any Covered Part damaged by a Warrantable Failure of the defective Covered Part.

Owner's Responsibilities

During The Base Engine Warranty

Owner is responsible for the cost of lubricating oil, antifreeze, filter elements and other maintenance items provided during warranty repairs unless such items are not reusable due to the Warrantable Failure.

During The Extended Major Components Warranty

Owner is responsible for the cost of all labor needed to repair the Engine, including the labor to remove and reinstall the Engine. When Cummins elects to repair a part instead of replacing it, Owner is not responsible for the labor needed to repair the part.

Owner is responsible for the cost of all parts required for the repair except for the defective Covered Part and any Covered Part damaged by a Warrantable Failure of the defective Covered Part.

Owner is responsible for the cost of lubricating oil, antifreeze, filter elements and other maintenance items replaced during repair of a Warrantable Failure.

During The Base Engine and Extended Major Components Warranties

Owner is responsible for the operation and maintenance of the Engine as specified in the applicable Cummins Operation and Maintenance Manual. Owner is also responsible for providing proof that all recommended maintenance has been performed.

Before the expiration of the applicable warranty, Owner must notify a Cummins distributor, authorized dealer or other repair location approved by Cummins of any Warrantable Failure and make the Engine available for repair by such facility. Locations in the United States and Canada are listed in the Cummins Off-Highway Authorized Dealer Directory.

Owner is responsible for communication expenses, meals, lodging and similar costs incurred as a result of a Warrantable Failure.

Owner is responsible for non-Engine repairs, "downtime" expenses, cargo damage, fines, all applicable taxes, all business costs and other losses resulting from a Warrantable Failure.

Limitations

Cummins is not responsible for failures or damage resulting from what Cummins determines to be abuse or neglect, including, but not limited to: operation without adequate coolants or lubricants; overfueling; overspeeding; lack of maintenance of lubricating, cooling or intake systems; improper storage, starting, warm-up, run-in or shutdown practices; unauthorized modifications of the Engine. Cummins is also not responsible for failures caused by incorrect oil or fuel or by water, dirt or other contaminants in the fuel or oil.

For power units and fire pumps (package units), this warranty applies to accessories, except for clutches and filters, supplied by Cummins which bear the name of another company.

Except for power units and fire pumps, this warranty does not apply to accessories which bear the name of another company. Such non-warranted accessories include, but are not limited to: alternators, starters, fans**, air conditioning compressors, clutches, filters, transmissions, torque converters, steering pumps, and non-Cummins fan drives, engine compression brakes and air compressors.

Cummins Compusave units are covered by a separate warranty.

Before a claim for excessive oil consumption will be considered, Owner must submit adequate documentation to show that consumption exceeds Cummins published standards.

Failures of belts and hoses supplied by Cummins are not covered beyond the first 500 hours or one year of operation, whichever occurs first.

Parts used to repair a Warrantable Failure may be new Cummins parts, Cummins-approved rebuilt parts, or repaired parts. Cummins is not responsible for failures resulting from the use of parts not approved by Cummins.

A new Cummins or Cummins-approved rebuilt part used to repair a Warrantable Failure assumes the identity of the part it replaced and is entitled to the remaining coverage hereunder.

For all A Series Applications, including industrial, travel reimbursement for non-transportable equipment will be limited to 4.0 hours, $0.25/mile and 250 miles maximum. Any costs beyond this limit are the customer's responsibility.

CUMMINS DOES NOT COVER WEAR OR WEAROUT OF COVERED PARTS.

CUMMINS IS NOT RESPONSIBLE FOR INCIDENTAL OR CONSEQUENTIAL DAMAGES.

THESE WARRANTIES SET FORTH HEREIN ARE THE SOLE WARRANTIES MADE BY CUMMINS IN REGARD TO THESE ENGINES. CUMMINS MAKES NO OTHER WARRANTIES, EXPRESS OR IMPLIED, OR OF MERCHANTABILITY OR FITNESS FOR A PARTICULAR PURPOSE.

This warranty gives you specific legal rights, and you may also have other rights which vary from state to state.

Emission Warranty

Products Warranted

This emission warranty applies to new Engines marketed by Cummins that are used in the United States* in vehicles designed for Industrial Off-Highway use. This warranty applies to Engines delivered to the ultimate purchaser on or after April 1, 1999 for Engines up to 750 horsepower, on or after January 1, 2000 for Engines 751 horsepower and over.

Coverage

Cummins warrants to the ultimate purchaser and each subsequent purchaser that the Engine is designed, built and equipped so as to conform at the time of sale by Cummins with all U.S. Federal emission regulations applicable at the time of manufacture and that it is free from defects in workmanship or material which would cause it not to meet these regulations within the longer of the following periods: (A) ***Five years or 3,000 hours of operation, whichever occurs first, as measured from the date of delivery of the Engine to the ultimate purchaser, or (B) The Base Engine Warranty.

If the vehicle in which the Engine is installed is registered in the state of California, a separate California Emission Warranty also applies.

Limitations

Failures, other than those resulting from defects in materials, or workmanship, are not covered by this warranty.

Cummins is not responsible for failures or damage resulting from what Cummins determines to be abuse or neglect, including, but not limited to: operation without adequate coolant or lubricants; overfueling; overspeeding; lack of maintenance of lubricating, cooling or intake systems; improper storage, starting, warm-up, run-in or shutdown practices; unauthorized modifications of the Engine. Cummins is also not responsible for failures caused by incorrect fuel or by water, dirt or other contaminants in the fuel.

Cummins is not responsible for non-Engine repairs, "downtime" expenses, cargo damage, fines, all business costs or other losses resulting from a Warrantable Failure.

CUMMINS IS NOT RESPONSIBLE FOR INCIDENTAL OR CONSEQUENTIAL DAMAGES.

* Includes American Samoa, the Commonwealth of Northern Mariana Islands, Guam, Puerto Rico, and the U.S. Virgin Islands.

** Alternators, starters, and fans ARE covered for the duration of the Base Engine Warranty on A Series and B3.3 Engines.

*** Emissions Warranty for B LPG Industrial Off-Highway engines is 5 Years / 3,500 Hours.

All Engines InternationalIndustrial (Off-Highway)

Coverage

PRODUCTS WARRANTED

This warranty applies to new Engines sold by Cummins and delivered to the first user on or after April 1, 1999, that are used in industrial (off-highway) applications anywhere in the world where Cummins-approved service is available, except the United States* and Canada. Different warranty coverage is provided for Engines used in marine, generator drive and certain defense applications.

BASE ENGINE WARRANTY

This warranty covers any failures of the Engine, under normal use and service, which result from a defect in material or factory workmanship (Warrantable Failure).

Coverage begins with the sale of the Engine by Cummins. Coverage continues for two years or 2,000 hours of operation, whichever occurs first, from the date of delivery of the Engine to the first user, or from the date the unit is first leased, rented or loaned, or when the Engine has been operated for 50 hours, whichever occurs first. If the 2,000 hour limit is exceeded during the first year, coverage continues until the end of the first year.

EXTENDED MAJOR COMPONENTS WARRANTY

The Extended Major Components Warranty covers Warrantable Failures of the Engine cylinder block, camshaft, crankshaft and connecting rods (Covered Parts).

Bushing and bearing failures are not covered.

This coverage begins with the expiration of the Base Engine Warranty and ends three years or 10,000* hours of operation, from the date of delivery of the Engine to the first user, or from the date the unit is first leased, rented or loaned, or when the Engine has been operated for 50 hours, whichever occurs first.

*3,000 hours for A series engines.

These warranties are made to all Owners in the chain of distribution, and Coverage continues to all subsequent Owners until the end of the periods of Coverage.

Cummins' Responsibilities

DURING THE BASE ENGINE WARRANTY

Cummins will pay for all parts and labor needed to repair the damage to the Engine resulting from a Warrantable Failure.

Cummins will pay for the lubricating oil, antifreeze, filter elements, and other maintenance items that are not reusable due to a Warrantable Failure.

Cummins will pay reasonable costs for mechanics to travel to and from the equipment site, including meals, mileage and lodging, when the repair is performed at the site of the failure.

Cummins will pay reasonable labor costs for Engine removal and reinstallation when necessary to repair a Warrantable Failure.

DURING THE EXTENDED MAJOR COMPONENTS WARRANTY

Cummins will pay for the repair or, at its option, replacement of the defective Covered Part and any Covered Part damaged by a Warrantable Failure of the defective Covered part.

Owner's Responsibilities

DURING THE BASE ENGINE WARRANTY

Owner is responsible for the cost of lubricating oil, antifreeze, filter elements and other maintenance items replaced during warranty repairs unless such items are not reusable due to the Warrantable Failure.

DURING THE EXTENDED MAJOR COMPONENTS WARRANTY

Owner is responsible for the cost of all labor needed to repair the Engine, including the labor to remove and reinstall the Engine. When Cummins elects to repair a part instead of replacing it, Owner is not responsible for the labor needed to repair the part.

Owner is responsible for the cost of all parts required for the repair except for the defective Covered Part and any Covered Part damaged by a Warrantable Failure of the defective Covered Part.

Owner is responsible for the cost of lubricating oil, antifreeze, filter elements and other maintenance items replaced during repair of a Warrantable Failure.

DURING THE BASE ENGINE AND EXTENDED MAJOR COMPONENTS WARRANTIES

Owner is responsible for the operation and maintenance of the Engine as specified in the applicable Cummins Operation and Maintenance Manual. Owner is also responsible for providing proof that all recommended maintenance has been performed.

Before the expiration of the applicable warranty, Owner must notify a Cummins distributor, authorized dealer or other repair location approved by Cummins of any Warrantable Failure and make the product available for repair by such facility. Locations are listed in the Cummins International Sales and Service Directory.

Owner is responsible for communication expenses, meals, lodging and similar costs incurred as a result of a Warrantable Failure.

Owner is responsible for non-Engine repairs, "downtime" expenses, cargo damage, fines, all applicable taxes, all business costs and other losses resulting from a Warrantable Failure.

Limitations

Cummins is not responsible for failures or damage resulting from what Cummins determines to be abuse or neglect, including, but not limited to: operation without adequate coolants or lubricants; overfueling; overspeeding; lack of maintenance of lubricating, cooling or intake systems; improper storage, starting, warm-up, run-in or shutdown practices; unauthorized modifications of the Engine. Cummins is also not responsible for failures caused by incorrect oil or fuel or by water, dirt or other contaminants in the fuel or oil.

For power units and fire pumps (package units) the warranty applies to accessories, except for clutches and filters supplied by Cummins which bear the name of another company.

Except for the accessories noted previously, Cummins does not warrant accessories which bear the name of another company. Such non-warranted accessories include, but are not limited to: alternators, starters, fans*, air conditioning compressors, clutches, filters, transmissions, torque converters, steering pumps, non-Cummins fan drives, and air cleaners.

Cummins Compusave units are covered by a separate warranty.

Before a claim for excessive oil consumption will be considered, Owner must submit adequate documentation to show that consumption exceeds Cummins published standards.

Failures of belts and hoses supplied by Cummins are not covered beyond the first 500 hours or one year of operation, whichever occurs first.

Parts used to repair a Warrantable Failure may be new Cummins parts, Cummins-approved rebuilt parts, or repaired parts. Cummins is not responsible for failures resulting from the use of parts not approved by Cummins.

A new Cummins or Cummins-approved rebuilt part used to repair a Warrantable Failure assumes the identity of the part it replaced and is entitled to the remaining coverage hereunder.

For all A Series Applications, including industrial, travel reimbursement for non-transportable equipment will be limited to 4.0 hours, $0.25/mile and 250 miles maximum. Any costs beyond this limit are the customer's responsibility.

CUMMINS DOES NOT COVER WEAR OR WEAROUT OF COVERED PARTS.

CUMMINS IS NOT RESPONSIBLE FOR INCIDENTAL OR CONSEQUENTIAL DAMAGES.

THESE WARRANTIES SET FORTH HEREIN ARE THE SOLE WARRANTIES MADE BY CUMMINS IN REGARD TO THESE ENGINES. CUMMINS MAKES NO OTHER WARRANTIES, EXPRESS OR IMPLIED, OR OF MERCHANTABILITY OR FITNESS FOR A PARTICULAR PURPOSE.

In case of consumer sales, in some countries, the Owner has statutory rights which cannot be affected or limited by the terms of this warranty.

Nothing in this warranty excludes or restricts any contractual rights the Owner may have against third parties.

* Alternators, starters, and fans ARE covered for the duration of the base engine warranty on A series and B3.3 engines.

All Engines WorldwideCommercial Marine PropulsionAuxiliary Products

Coverage

Products Warranted Marine

This warranty applies to new Engines sold by Cummins Inc., herein after "Cummins", and used in Marine propulsion and marine auxiliary applications anywhere in the world where Cummins approved service is available and delivered to the first user on or after July 1, 2002. This warranty excludes all engines branded and sold as Cummins Mercruiser Diesel products. The `Product' consists of a new Cummins Engine, as well as accessories, which are approved and supplied by Cummins and which are either installed by Cummins or a Cummins authorized distributor. These Products have the following designation:

MARINE PROPULSION AND MARINE AUXILIARY (EXCLUDING GENERATOR DRIVE ENGINES)

Intermittent Rating

This power rating is intended for intermittent use in variable load applications where full power is limited to two hours out of every eight hours of operation. Also, reduced power operations must be at or below 200 RPM of the maximum rated RPM. This rating is an ISO3046 Fuel Stop Power Rating and is for applications that operate less than 1500 hours per year.

Medium Continuous Rating

This power rating is intended for continuous use in variable load applications where full power is limited to six hours out of every twelve hours of operation. Also, reduced power operations must be at or below 200 RPM of the maximum rated RPM. This rating is an ISO3046 Fuel Stop Power Rating and is for applications that operate less than 3000 hours per year.

Heavy Duty Rating

This power rating is intended for continuous use in variable load applications where full power is limited to eight hours out of every ten hours of operation. Also, reduced power must be at least 200 RPM below the maximum rated RPM. This rating is an ISO3046 Fuel Stop Power Rating and is for applications that operate less than 5,000 hours per year.

Continuous Rating

This power rating is intended for continuous use in applications requiring uninterrupted service at full power. This rating is an ISO3046 Standard Power Rating.

MARINE GENERATOR DRIVE

Prime Power

Engines with this rating are available for an unlimited number of hours per year in variable load applications. Variable load is not to exceed a 70 percent average of the Prime Power rating during any operating period of 250 hours. Total operating time at 100 percent Prime Power shall not exceed 500 hours per year.

A 10 percent overload capability is available for a period of one hour within a twelve hour period of operation. Total operating time at the 10 percent overload power shall not exceed 25 hours per year. This power rating conforms to ISO 8528 guidelines.

Continuous Power

Engines with this rating are available for supplying utility power at a constant 100 percent load for an unlimited number of hours per year. No overload capability is available for this rating.

Continuous Power ratings differ from Prime Power ratings in that the Continuous Load ratings are significantly reduced from the Prime Power ratings. Continuous Load ratings have no load factor or application restrictions. This power rating conforms to ISO 8528 guidelines.

Base Engine Warranty

This warranty covers any failures of the Product, under normal use and service, which result from a defect in Cummins material or factory workmanship (Warrantable Failure). Coverage begins with the sale of the Engine by Cummins and ends at the time and hours stated in the following table. The Duration commences on either the date of delivery of the Product to the first end-user, or the date the unit is first leased, rented or loaned, or when the Product has been operated for 50 hours, whichever occurs first.

	Duration Whichever Occurs First	
Rating	Years	Hours
Intermittent	1	1500
Medium Continuous	1	3000

Heavy Duty	1	5000
Continuous	1	Unlimited
Prime Power	1	Unlimited
Continuous Power	1	Unlimited

Extended Major Components Warranty

The Extended Major Components Warranty applies to engines other than B and C Series. It covers Warrantable Failures of the engine cylinder block, camshaft, crankshaft and connecting rods (Covered Parts). Bushing and bearing failures are not covered. This coverage begins with the expiration of the Base Engine Warranty and ends at three years or 10,800 hours of operation, whichever occurs first, after the date of delivery to the first end-user, or the date the unit is first leased, rented, or loaned, or when the Product has been operated for 50 hours, whichever occurs first.

These warranties are made to all Owners in the chain of distribution and Coverage continues to all subsequent Owners until the end of the periods of Coverage.

Cummins Responsibilities

During Base Engine Warranty

Cummins will pay for all parts and labor needed to repair the damage to the Product resulting from a Warrantable Failure when performed during normal business hours. All labor costs will be paid in accordance with Cummins published Standard Repair Time guidelines.

When it is necessary for mechanics to make on-site warranty repairs, Cummins will pay reasonable travel expenses, including meals, mileage and lodging, for mechanics to travel to and from the repair dock.

Cummins will pay for the lubricating oil, antifreeze, filter elements, and other maintenance items that are not reusable due to the Warrantable Failure.

Cummins will pay for reasonable labor costs for Engine removal and reinstallation when necessary to repair a Warrantable Failure.

During the Extended Major Components Warranty

Cummins will pay for the repair or, at its option, replacement of the defective Covered Part and any Covered Part damaged by a Warrantable Failure of the defective Covered Part.

Owner Responsibilities

During the Base Engine Warranty

Owner is responsible for the cost of lubricating oil, antifreeze, filter elements, and other maintenance items replaced during warranty repairs unless such items are not reusable due to the Warrantable Failure.

During the Extended Major Components Warranty

Owner is responsible for the cost of all labor needed to repair the Engine, including the labor cost for Engine removal and reinstallation. When Cummins elects to repair a part instead of replacing it, the Owner is not responsible for the labor needed to repair the part.

Owner is responsible for the cost of all parts required for the repair except for the defective Covered Part and any Covered Part damaged by a Warrantable Failure of the defective Covered Part.

Owner is responsible for the cost of lubricating oil, antifreeze, filter elements and other maintenance items replaced during repair of a Warrantable Failure.

During the Base Engine and Extended Major Components Warranties

Owner is responsible for the operation and maintenance of the Product as specified in the applicable Cummins Operation and Maintenance Manual. Owner is also responsible for providing proof that all recommended maintenance has been performed.

Before the expiration of the applicable warranty, Owner must notify a Cummins distributor, authorized dealer, or other repair location approved by Cummins of any Warrantable Failure and make the Engine available for repair by such facility. Locations in the United States and Canada are listed in the Cummins U.S. and Canada Sales and Service Directory; other locations are listed in the Cummins International Sales and Service Directory.

In the event of any Product failure, Owner is responsible for the cost of towing the boat to the repair dock and for all associated docking and harbor charges.

Owner is responsible for communication expenses, meals, lodging, and similar costs incurred as a result of a Warrantable Failure.

Owner is responsible for maintaining the Engine hourmeter in good working order at all times and to ensure that the hourmeter accurately reflects the total hours of operation of the Product.

Owner is responsible for the costs to investigate complaints, unless the problem is caused by a defect in Cummins material or factory workmanship.

Owner is responsible for non-Engine repairs, "downtime" expenses, cargo damage, fines, all applicable taxes, all business costs, and other losses resulting from a Warrantable Failure.

Limitations

Cummins is not responsible for failures or damage resulting from what Cummins determines to be abuse or neglect, including, but not limited to: operation without adequate coolants or lubricants; overfueling; overspeeding; lack of maintenance of cooling, lubricating or intake systems; improper storage, starting, warm-up, run-in or shutdown practices; unauthorized modifications to the Engine. Cummins is also not responsible for failures caused by incorrect oil or fuel or by water, dirt or other contaminants in the fuel or oil.

Cummins is not responsible for failures resulting from:

1. Use or application of the Product inconsistent with its rating designation set forth above.
2. Incorrect installation.

Before a claim for excessive oil consumption will be considered, Owner must submit adequate documentation to show that oil consumption exceeds Cummins published standards.

Cummins is not responsible for failures of marine maintenance components supplied by Cummins beyond ninety days after the coverage start date. Marine maintenance components include, but are not limited to: sea water pump impellers; zinc plugs; oil filters; fuel filters; air filters; water filters; fuel/water separator filters; expansion tank pressure caps.

Failure of belts and hoses supplied by Cummins are not covered beyond 90 days after the date of delivery of the Product to the first user, or the date the unit is first leased, rented or loaned, or when the Product has been operated for 50 hours, whichever occurs first.

Except for the accessories noted previously, Cummins does not warrant accessories which bear the name of another company.

Parts used in warranty repairs may be new Cummins parts, Cummins approved rebuilt parts, or repaired parts. Cummins is not responsible for failures resulting from the use of parts not supplied by Cummins.

Parts used to repair a Warrantable Failure may be new Cummins parts, Cummins approved rebuilt parts, or repaired parts. Cummins is not responsible for failures resulting from the use of parts not approved by Cummins.

A new Cummins or Cummins-approved rebuilt part used to replace a Warranted Part assumes the identity of the Warranted Part it replaced and is entitled to the remaining coverage hereunder.

Cummins Inc. reserves the right to interrogate Electronic Control Module (ECM) data for purposes of failure analysis.

CUMMINS DOES NOT COVER WEAR OR WEAROUT OF COVERED PARTS.

CUMMINS IS NOT RESPONSIBLE FOR INCIDENTAL OR CONSEQUENTIAL DAMAGES.

THIS WARRANTY AND THE EMISSION WARRANTY SET FORTH HEREIN ARE THE SOLE WARRANTIES MADE BY CUMMINS IN REGARD TO THESE ENGINES. CUMMINS MAKES NO OTHER WARRANTIES, EXPRESS OR IMPLIED, OR OF MERCHANTABILITY OR FITNESS FOR A PARTICULAR PURPOSE.

In the United States** and Canada, this warranty gives you specific legal rights, and you may also have other rights which vary from state to state.

Outside the United States** and Canada, in case of consumer sales, in some countries the Owner has statutory rights which cannot be affected or limited by the terms of this warranty.

Nothing in this warranty excludes or restricts any contractual rights the Owner may have against third parties.

Emission Warranty

Products Warranted

This Emission Warranty applies to new Engines certified to United States EPA 40 CFR 94 sold by Cummins that are installed on vessels flagged or registered in the United States**.

Coverage

Cummins warrants to the first user and each subsequent purchaser that the Engine is designed, built and equipped so as to conform at the time of sale by Cummins with all United States Federal emission regulations applicable at the time of manufacture and that it is free from defects in material or factory workmanship which would cause it not to meet these regulations within the longer of the following periods. (A) Five years or 5,000 hours of operation, whichever occurs first, as measured from the date of delivery of the engine to the first user, or the date the unit is first leased,

rented or loaned, or when the Engine has been operated for 50 hours, whichever occurs first, or (B) The Base Engine Warranty.

Limitations

An owner may elect to have maintenance, replacement or repair of the emission control parts performed by a facility other than a Cummins distributor, an authorized dealer or a repair location approved by Cummins, and may elect to use parts other than new genuine Cummins or Cummins approved rebuilt parts and assemblies for such maintenance, replacement or repair; however, the cost of such service or parts and subsequent failures resulting from such service or parts will not be covered under this emission control system warranty.

Failures, other than those resulting from defects in materials or factory workmanship, are not covered by this warranty.

Cummins is not responsible for failures or damage resulting from what Cummins determines to be abuse or neglect, including, but not limited to: operation without adequate coolants or lubricants; overfueling; overspeeding, lack of maintenance of lubricating, cooling or intake systems; improper storage, starting, warm-up, run-in or shutdown practices; unauthorized modifications of the Engine. Cummins is also not responsible for failures caused by incorrect oil or fuel or by water, dirt or other contaminants in the fuel or oil.

Cummins is not responsible for non-Engine repairs, “downtime” expenses, cargo damage, fines, all applicable taxes, all business costs or other losses resulting from a Warrantable Failure.

CUMMINS IS NOT RESPONSIBLE FOR INCIDENTAL OR CONSEQUENTIAL DAMAGES.

** United States includes American Samoa, the Commonwealth of Northern Mariana Islands, Guam, Puerto Rico, and the U.S. Virgin Islands.

California Emission Control System Warranty, Off-Highway

Products Warranted

This Emission Control System Warranty applies to off-road diesel engines certified with the California Air Resources Board beginning with the year 1996 for engines up to 750 horsepower, beginning with the year 2000 for 751 horsepower and over, marketed by Cummins, and registered in California for use in industrial off-highway applications.

Your Warranty Rights and Obligations

The California Air Resources Board and Cummins Engine Company, Inc., are pleased to explain the emission control system warranty on your engine. In California, new off-road diesel engines must be designed, built and equipped to meet the State's stringent anti-smog standards. Cummins must warrant the emission control system on your engine for the periods of time listed below provided there has been no abuse, neglect or improper maintenance of your engine.

Your emission control system may include parts such as the fuel injection system and the air induction system. Also included may be hoses, belts, connectors and other emission-related assemblies.

Where a warrantable condition exists, Cummins will repair your off-road diesel engine at no cost to you including diagnosis, parts and labor.

Manufacturer's Warranty Coverage

This warranty coverage is provided for 5 years or 3,000 hours of engine operation, whichever first occurs from the date of delivery of the engine to the first user. If any emission-related part on your engine is defective, the part will be repaired or replaced by Cummins.

Coverage

This emission control system warranty applies to the following emission control parts:

Turbocharger
- Compressor Wheel
- Turbine Wheel
- Turbine Oil Seal
- Wastegate Valve
- Wastegate Actuator/Controller

Intake Manifold
- Charge Air Cooler

Exhaust Manifold

Fuel System
- Actuators (Fueling & Timing)
- Fuel Pressure Sensor
- Injectors (TP)

Electronic Control System
- Control Module
- Intake Manifold Pressure Sensor
- Coolant Temperature Sensor

Owner's Warranty Responsibilities

As the off-road diesel engine owner, you are responsible for the performance of the required maintenance listed in your Cummins Operation and Maintenance Manual. Cummins recommends that you retain all receipts covering maintenance on your off-road diesel engine, but Cummins cannot deny warranty solely for the lack of receipts or for your failure to ensure the performance of all scheduled maintenance.

You are responsible for presenting your off-road diesel engine to a Cummins dealer as soon as a problem exists. The warranty repairs should be completed in a reasonable amount of time, not to exceed 30 days.

As the off-road diesel engine owner, you should also be aware that Cummins may deny you warranty coverage if your off-road diesel engine or a part has failed due to abuse, neglect, improper maintenance or unapproved modifications.

Your engine is designed to operate on diesel fuel only. Use of any other fuel may result in your engine no longer operating in compliance with California's emissions requirements.

If you have any questions regarding your warranty rights and responsibilities, you should contact Cummins Customer Assistance Department at 1-800-343-7357 (1-800-DIESELS) or the California Air Resources Board at 9528 Telstar Avenue, El Monte, CA 91731.

Prior to the expiration of the applicable warranty, Owner must give notice of any warranted emission control failure to a Cummins distributor, authorized dealer or other repair location approved by Cummins and deliver the engine to such facility for repair. Repair locations are listed in Cummins United States and Canada Service Directory.

Owner is responsible for incidental costs such as: communication expenses, meals, lodging incurred by Owner or employees of Owner as a result of a warrantable failure.

Owner is responsible for business costs and losses, "downtime" expenses, and cargo damage resulting from a warrantable failure. CUMMINS IS NOT RESPONSIBLE FOR OTHER INCIDENTAL OR CONSEQUENTIAL DAMAGES, INCIDENTAL OR CONSEQUENTIAL DAMAGES INCLUDE BUT ARE NOT LIMITED TO FINES, THEFT, VANDALISM OR COLLISIONS.

Replacement Parts

Cummins recommends that any service parts used for maintenance, repair or replacement of emission control systems be new, genuine Cummins or Cummins approved rebuilt parts and assemblies, and that the engine be serviced by a Cummins distributor, authorized dealer or the repair location approved by Cummins. The owner may elect to have maintenance, replacement or repair of the emission control parts performed by a facility other than a Cummins distributor, an authorized dealer or a repair location approved by Cummins, and may elect to use parts other than new genuine Cummins or Cummins approved rebuilt parts and assemblies for such maintenance, replacement or repair; however, the cost of such service or parts will not be covered under this emission control system warranty.

Cummins Responsibilities

Repairs and service will be performed by any Cummins distributor, authorized dealer or other repair location approved by Cummins using new, genuine Cummins or Cummins approved rebuilt parts and assemblies. Cummins will repair any of the emission control parts found by Cummins to be defective without charge for parts or labor (including diagnosis which results in determination that there has been a failure of a warranted emission control part).

Emergency Repairs

In the case of an emergency where a Cummins distributor, authorized dealer, or other repair location approved by Cummins is not available, repairs may be performed by any available repair location using any replacement parts. Cummins will reimburse the Owner for expenses (including diagnosis), not to exceed the manufacturer's suggested retail price for all warranted parts replaced and labor charges based on the manufacturer's recommended time allowance for the warranty repair and the geographically appropriate hourly labor rate. A part not being available within 30 days or a repair not being complete within 30 days constitutes an emergency. Replaced parts and paid invoices must be presented at a Cummins authorized repair facility as a condition of reimbursement for emergency repairs not performed by a Cummins distributor, authorized dealer, or other repair location approved by Cummins.

Warranty Limitations

Cummins is not responsible for failures resulting from Owner or operator abuse or neglect, such as: operation without adequate coolant, fuel or lubricants; overfueling; overspeeding; lack of maintenance of lubricating, cooling or air intake systems; improper storage, starting, warm-up, run-in or shutdown practices.

The manufacturer warrants to the ultimate purchaser and each subsequent purchaser that the engine is designed, built, and equipped so as to conform with all applicable regulations adopted by the Air Resources Board, and that it is free from defects in materials and workmanship which cause the failure of a warranted part.

Any warranted part which is not scheduled for replacement as required maintenance, or which is scheduled only for regular inspection to the effect of "repair or replace as necessary" is warranted for the warranty period.

Any warranted part which is scheduled for replacement as required maintenance is warranted for the period of time prior to the first scheduled replacement point for that part.

The owner will not be charged for diagnostic labor which leads to the determination that a warranted part is defective, if the diagnostic work is performed at a warranty station.

The manufacturer is liable for damages to other engine components caused by the failure under warranty of any warranted part.

Cummins is not responsible for failures resulting from improper repair or the use of parts which are not genuine Cummins or Cummins approved parts.

These warranties, together with the express commercial warranties and emission warranty are the sole warranties of Cummins. There are no other warranties, express or implied, or of merchantability or fitness for a particular purpose.

Engine Will Not Crank or Cranks Slowly....TS-38
About the Manual i-2
General Information....i-2
Acronyms and Abbreviations i-14
General Information....i-14
Additional Service Literature L-1
General Information....L-1
Air Cleaner Restriction 5-8
Maintenance Check....5-8
Air Compressor Air Pressure Rises Slowly TS-3
Air Compressor Discharge Lines 7-1
General Information....7-1
Maintenance Check....7-2
Air Compressor Noise is Excessive....TS-4
Air Compressor Pumping Excess Lubricating Oil into the Air System TS-5
Air Compressor Will Not Maintain Adequate Air Pressure (Not Pumping Continuously)....TS-6
Air Compressor Will Not Stop Pumping....TS-7
Air Intake Piping 3-6
Maintenance Check....3-6
Air Intake System V-5
Specifications....V-5
Industrial and Generator Drive....V-5
Air Leaks, Air Intake and Exhaust Systems 5-4
Maintenance Check....5-4
Variable Geometry....5-6
Air Starting Motor A-1
General Information....A-1
Air Tanks and Reservoirs 3-7
Drain....3-7
All Engines InternationalIndustrial (Off-Highway) W-7
All Engines United States and CanadaIndustrial (Off-Highway) W-4
All Diesel EnginesWorldwideGenerator Drive W-1
All Engines WorldwideCommercial Marine PropulsionAuxiliary Products W-9
Alternator Not Charging or Insufficient Charging....TS-8
Battery Cables and Connections A-1
Initial Check....A-1
California Emission Control System Warranty, Off-Highway W-13
Capscrew Markings and Torque Values V-19
Capscrew Markings and Torque Values - Metric....V-19
Capscrew Markings and Torque Values - U.S. Customary....V-19
General Information....V-19
Charge-Air Piping 3-6
Maintenance Check....3-6
Cold Weather Starting 1-2
General Information....1-2
Using Starting Aids....1-2
Cold Weather Starting Aids 6-2
Maintenance Check....6-2
Component Manufacturers' Addresses M-1
Air Compressors....M-1
Air Cylinders....M-1
Air Heaters....M-1
Air Starting Motors....M-1
Alternators....M-1
Auxiliary Brakes....M-1
Belts....M-1
Catalytic Converters....M-1
Coolant Level Switches....M-1
Clutches....M-1
Coolant Heaters....M-2
Drive Plates....M-2
Electric Starting Motors....M-2
Electronic Switches....M-2
Engine Protection Controls....M-2
Fan Clutches....M-2
Fans....M-2
Fault Lamps....M-2
Filters....M-2
Flexplates....M-2
Fuel Coolers....M-2
Fuel Pumps....M-2
Fuel Warmers....M-2
Gauges....M-3
Governors....M-3
Heat Sleeves....M-3
Hydraulic and Power Steering Pumps....M-3
In-Line Connectors....M-3
Oil Heaters....M-3
Prelubrication Systems....M-3
Radiators....M-3
Throttle Assemblies....M-3
Torque Converters....M-3
Coolant Filter 5-1
General Information....5-1
Install....5-2
Remove....5-1
Cooling Fan Belt Tensioner 5-3
Inspect for Reuse....5-3
Coolant Level 3-3
Maintenance Check....3-3
Coolant Loss - External....TS-10
Coolant Loss - Internal....TS-11
Coolant Recommendations and Specifications V-12
Coolant Replacement Requirements....V-16
Cooling System Sealing Additives....V-13
Cooling System Soluble Oils....V-13
Fleetguard® DCA4 Service Filters and Liquid Precharge....V-14
Fully Formulated Coolant/Antifreeze....V-12
Supplemental Coolant Additive (SCA)....V-14
Test Intervals....V-15
Testing SCA Concentration Level CC-2602 Test Kit....V-14
Precautions and Instructions for Proper Kit Use....V-14
Coolant Temperature Above Normal - Gradual Overheat....TS-12
Coolant Temperature Above Normal - Sudden Overheat....TS-14
Coolant Temperature Below Normal....TS-16
Cooling System V-4
General Information....V-4
Specifications....V-4
Crankcase Breather Tube 3-7
Maintenance Check....3-7
Crankcase Breather Tube 6-1
Maintenance Check....6-1
Crankcase Gases (Blowby) Excessive....TS-18
Cummins Customized Parts Catalog L-3
General Information....L-3
Ordering the Customized Parts Catalog....L-3
Ordering by Telephone....L-3
Ordering On-Line....L-3
Cummins/Fleetguard® Filter Specifications V-8
Specifications....V-8
Daily Maintenance Procedures - Overview 3-1
Engine Operation Report....3-1
General Information....3-1
Unusual Engine Noise....3-1
Distributors - International S-31
Locations....S-31
Distributors and Branches S-4
Australia....S-22
Canada....S-19
New Zealand....S-26
United States....S-4
Division and Regional Offices S-2
Locations....S-2
Drive Belt Tension V-17
Tension Chart....V-17
Drive Belts 3-5
Maintenance Check....3-5
Poly-Vee Belt....3-5
Cogged Belt....3-5
Electrical System V-7
Specifications....V-7
Electromagnetic Interference (EMI) 1-21
General Information....1-21
System EMI Radiation Levels....1-21
System EMI Susceptibility....1-21
Electronic Controlled Fuel System 1-8
Diagnostic Fault Codes....1-9
Industrial Applications....1-9
Engine Protection System....1-15
Fuel System Description....1-15
General Information....1-8
Emergency and Technical Service S-1
General Information....S-1
Engine Brake - Low Retarding Power or Slow to Activate....TS-20
Engine Brake Does Not Operate....TS-19
Engine Brake — One or More Cylinders Braking with Power Switch Off....TS-21
Engine Component Torque Values V-18
General Information....V-18
Engine Decelerates Slowly....TS-22
Engine Diagrams E-2
Engine Views....E-2
Industrial CM570 and Power Generation without CM570....E-3
Engine Difficult to Start or Will Not Start (Exhaust Smoke)....TS-23
Engine Difficult to Start or Will Not Start (No Exhaust Smoke)....TS-25
Engine Identification E-1
ECM Dataplate....E-1
Industrial Applications....E-1
Power Generation....E-1
Engine Dataplate....E-1
Engine Mounts 6-2
Inspect....6-2

Engine Noise Excessive....TS-26
Engine Noise Excessive — Combustion Knocks....TS-28
Engine Operating Range 1-8
General Information....1-8
Engine Power Output Low....TS-29
Engine Runs Rough at Idle....TS-31
Engine Runs Rough or Misfires....TS-32
Engine Shutdown 1-8
General Information....1-8
Engine Shuts Off Unexpectedly or Dies During Deceleration....TS-33
Engine Speed Surges at Low or High Idle....TS-34
Engine Speed Surges Under Load or in Operating Range....TS-35
Engine Starts But Will Not Keep Running....TS-36
Engine Steam Cleaning 6-2
Clean....6-2
Engine Storage - Long Term A-2
General Information....A-2
Engine Vibration Excessive....TS-37
Engine Will Not Shut Off....TS-39
Engine Wiring Harness 5-9
Maintenance Check....5-9
Exhaust System V-6
Specifications....V-6
Industrial and Generator Drive....V-6
Fan Hub, Belt Driven 7-1
Maintenance Check....7-1
Fan, Cooling 3-4
Inspect for Reuse....3-4
Flow Diagram, Air Intake System D-13
Flow Diagram....D-13
Automotive, Industrial with CM570 and Power Generation without CM570....D-13
With CM870....D-14
Flow Diagram, Compressed Air System D-22
Flow Diagram....D-22
Flow Diagram, Cooling System D-10
Flow Diagram....D-10
Flow Diagram, Exhaust System D-15
Flow Diagram....D-15
Automotive, Industrial with CM570 and Power Generation without CM570....D-15
With CM870....D-17
Automotive With CM871....D-19
Automotive With CM871....D-20
Automotive With CM871....D-21
Flow Diagram, Fuel System D-2
Flow Diagram....D-2
Industrial CM570 and Power Generation without CM570....D-2
Flow Diagram, Lubricating Oil System D-4
Flow Diagram....D-4
With CM870....D-6
Automotive With CM871....D-9
Fuel Consumption Excessive....TS-40
Fuel Filter (Spin-On Type) 4-3
Clean and Inspect for Reuse....4-6
With Pressurized Fuel Filtering....4-6
With Vacuum Fuel Filtering....4-6
Initial Check....4-3
With Pressurized Fuel Filtering....4-3
With Vacuum Fuel Filtering....4-4
Install....4-6
With Pressurized Fuel Filtering....4-6
With Priming Pump....4-7
Without Priming Pump....4-8
Remove....4-5
With Pressurized Fuel Filtering....4-5
With Vacuum Fuel Filtering....4-6
Fuel in Coolant....TS-42
Fuel in the Lubricating Oil....TS-43
Fuel Recommendations and Specifications V-9
Fuel Recommendations....V-9
Fuel Shutoff Valve A-2
Inspect for Reuse....A-3
Install....A-4
Remove....A-2
Fuel System V-2
Specifications....V-2
Automotive with CM870....V-2
Automotive, Industrial with CM570 and Power Generation without CM570....V-2
Fuel-Water Separator 3-2
Drain....3-2
Canister Type....3-2
Spin-on Type....3-2
General Cleaning Instructions i-9
Abrasive Pads and Abrasive Paper....i-9
Definition of Clean....i-9
Fuel System....i-12
Gasket Surfaces....i-10
Plastic Bead Cleaning....i-11
Solvent and Acid Cleaning....i-10
Steam Cleaning....i-11
General Engine V-1
Specifications....V-1
General Repair Instructions i-8
General Information....i-8
Welding on a Vehicle with an Electronic Controlled Fuel System....i-8
General Safety Instructions i-6
Important Safety Notice....i-6
How to Use the Manual i-3
General Information....i-3
Illustrations i-5
General Information....i-5
Intake Manifold Air Temperature Above Specification....TS-44
Lubricating Oil and Filters 4-1
Drain....4-1
Fill....4-2
Install....4-2
Remove....4-1
Lubricating Oil Consumption Excessive....TS-45
Lubricating Oil Contaminated....TS-47
Lubricating Oil Level 3-3
Maintenance Check....3-3
Lubricating Oil Pressure High....TS-48
Lubricating Oil Pressure Low....TS-49
Lubricating Oil Recommendations and Specifications V-10
AfterMarket Oil Additive Usage....V-11
General Information....V-10
Industrial Applications....V-10
New Engine Break-in Oils....V-11
Lubricating Oil Sludge in the Crankcase Excessive....TS-50
Lubricating Oil System V-3
Specifications....V-3
Lubricating Oil Temperature Above Specification....TS-51
Lubricating or Transmission Oil in the Coolant....TS-52
Maintenance Guidelines - Overview 2-1
General Information....2-1
Maintenance Procedures - Overview 4-1
General Information....4-1
Maintenance Procedures - Overview 5-1
General Information....5-1
Maintenance Procedures - Overview 6-1
General Information....6-1
Maintenance Procedures - Overview 7-1
General Information....7-1
Maintenance Record Form 2-8
Maintenance Data....2-8
Maintenance Schedule 2-3
General Information....2-3
Oil Drain Intervals....2-3
All Others Without EGR....2-3
Normal Starting Procedure 1-3
General Information....1-3
Jump Starting....1-5
Operating Fuel Pressure is Low....TS-53
Operating Instructions - Overview 1-1
General Information....1-1
Operating the Engine 1-5
Ambient Temperature....1-6
0 to -32°C [32 to -25°F]....1-6
-32 to -54°C [-25 to -65°F]....1-6
Cold Weather....1-6
Normal....1-5
Winterfronts and Shutters....1-7
Overhead Set 6-3
Adjust....6-8
General Information....6-7
Measure....6-3
General Information....6-3
Problem Solving S-1
General Information....S-1
Radiator Hoses 6-1
Maintenance Check....6-1
Regional Offices - International S-27
Locations....S-27
Routine Service and Parts S-1
General Information....S-1
Service Literature Ordering Location L-2
Contact Information....L-2
Smoke, Black — Excessive....TS-54
Smoke, White — Excessive....TS-55
Starting Procedure After Extended Shutdown or Oil Change 1-2
General Information....1-2
Supplemental Coolant Additive (SCA) and Antifreeze Concentration 4-3

Maintenance Check....4-3
Supplemental Coolant Additive (SCA)....4-3
Antifreeze....4-3
Symbols i-4
General Information....i-4
System Diagrams - Overview D-1
General Information....D-1
To the Owner and Operator i-1
General Information....i-1
Tool Requirements 2-2
General Information....2-2
Automotive Applications....2-2
Troubleshooting Procedures and Techniques TS-1
General Information....TS-1
Troubleshooting Symptoms Charts TS-2
General Information....TS-2
Turbocharger Boost Pressure Low....TS-56
Turbocharger Leaks Engine Oil or Fuel....TS-57
Vibration Damper, Viscous 6-3
Inspect....6-3

Cummins Inc.
Box 3005
Columbus, Indiana, U.S.A., 47202

Registered Office
Cummins Ltd.
Unit 1-B Uniongate, Ridgeway Trading Estate,
Iver,
Buckinghamshire SL0 9HX,
England
Registration 573951 England

Copyright© 2007
Cummins Inc.

Bulletin 3666423
Printed in U.S.A. 10-AUGUST-2007